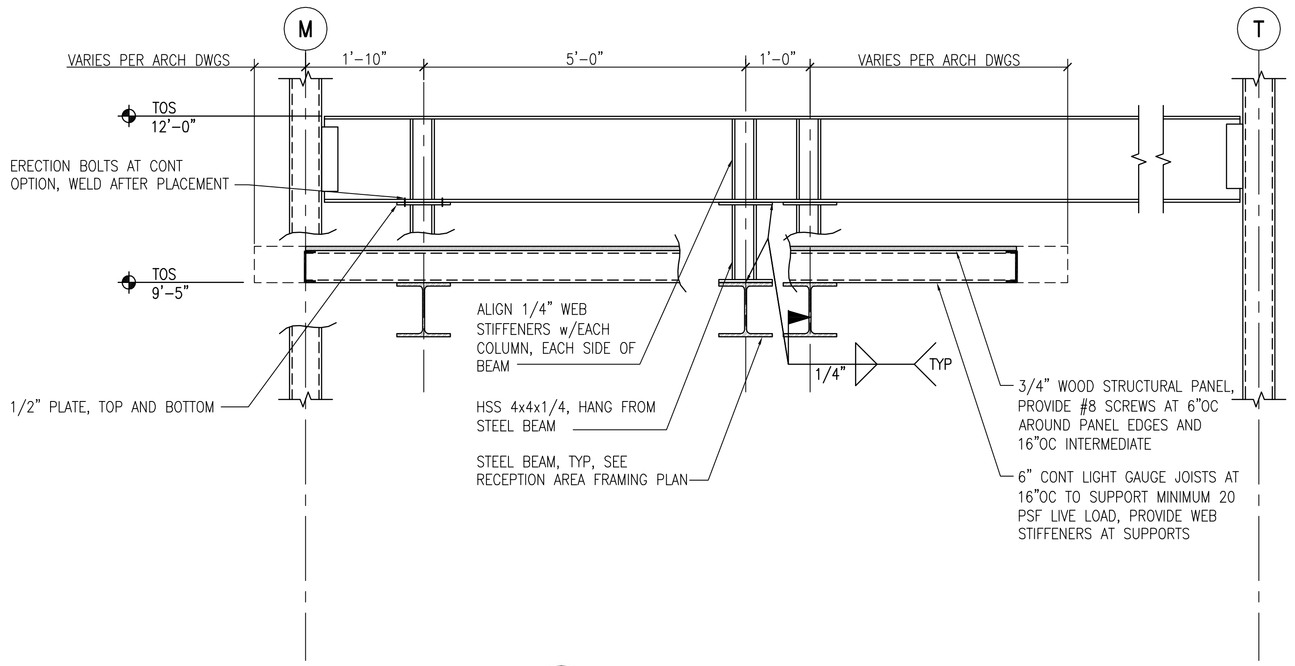

1 / SF102 **SECTION AT RECEPTION DESK CEILING**
SCALE: 3/4"=1'-0"

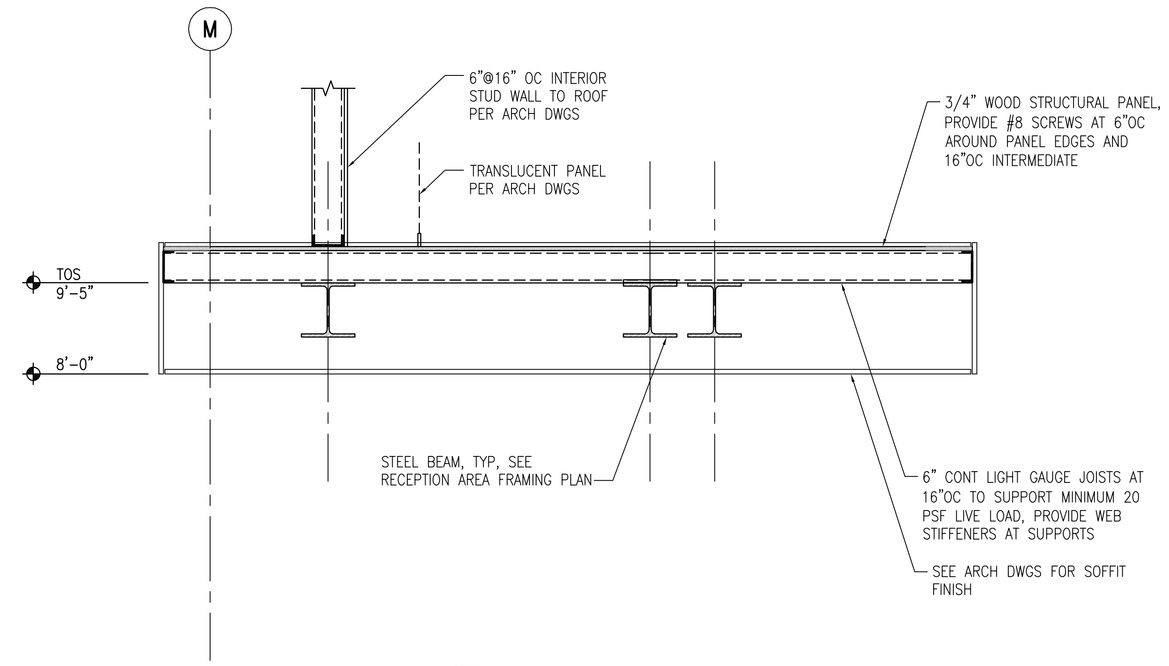

2 / SF102 **SECTION AT RECEPTION DESK CEILING**
SCALE: 3/4"=1'-0"

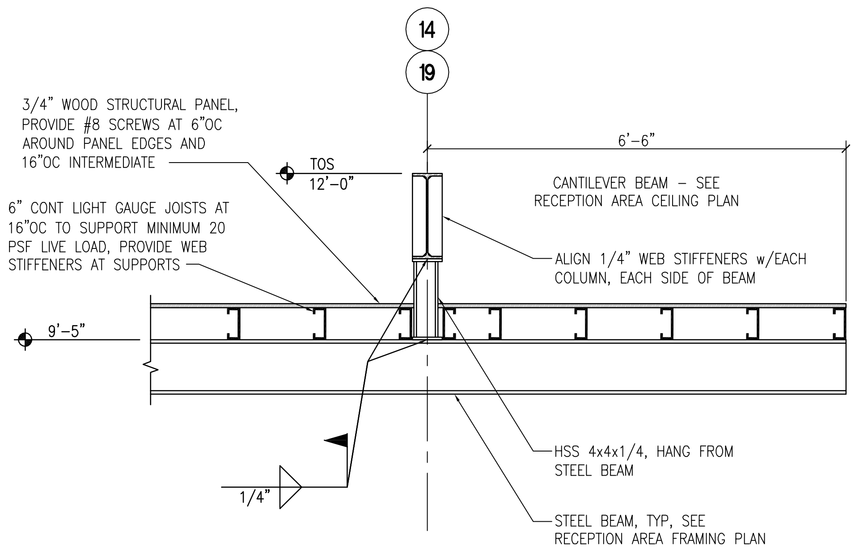

3 / SF102 **SECTION AT RECEPTION DESK CEILING**
SCALE: 3/4"=1'-0"

FINAL SUBMISSION

Revisions:	Date

CONSULTANTS:

CIVIL:
KENNETH HORNE & ASSOCIATES
7291 NORTH 9TH AVENUE
PENSACOLA, FLORIDA 32504
PH: (850) 471-9005
FX: (850) 471-0083

LANDSCAPE ARCHITECT:
CSA GROUP, INC.
6300 PICCADILLY SQUARE DRIVE
MOBILE, ALABAMA 36609
PH: (251) 344-4023
FX: (251) 344-4062

COMM/IDS:
SCHMIDT CONSULTING GROUP, INC.
139 EAST GOVERNMENT STREET
PENSACOLA, FLORIDA 32502
PH: (850) 438-0050
FX: (850) 432-8631

ARCHITECTURE:
BULLOCK TICE ASSOCIATES, INC.
909 EAST CERVANTES STREET
PENSACOLA, FL 32501
PH: (850) 434-5444
FX: (850) 432-5208

SURVEYORS:
KCI TECHNOLOGIES, INC.
10401 HIGHLAND MANOR DRIVE, SUITE 120
TAMPA, FLORIDA 33610
PH: (813) 740-2300

ARCHITECT/ENGINEERS:

BES DESIGN/BUILD

BES DESIGN/BUILD, LLC
766 Middle St, Fairhope, AL 36532
Phone: 251.990.5778 Fax: 251.990.3716

Drawing Title: MISCELLANEOUS FRAMING SECTIONS

Approved: Project Director

Project Title: PANAMA CITY JOINT OUTPATIENT CLINIC VA GULF COAST HEALTH CARE

Location: PANAMA CITY, FLORIDA

Date: MARCH 2012 | Checked: NB | Drawn: NB/KM

Project Number: 520-326

Building Number: -

Drawing Number: SF404

Dwg. 15 of 17

Office of Construction and Facilities Management

Department of Veterans Affairs

VA FORM 08-6231