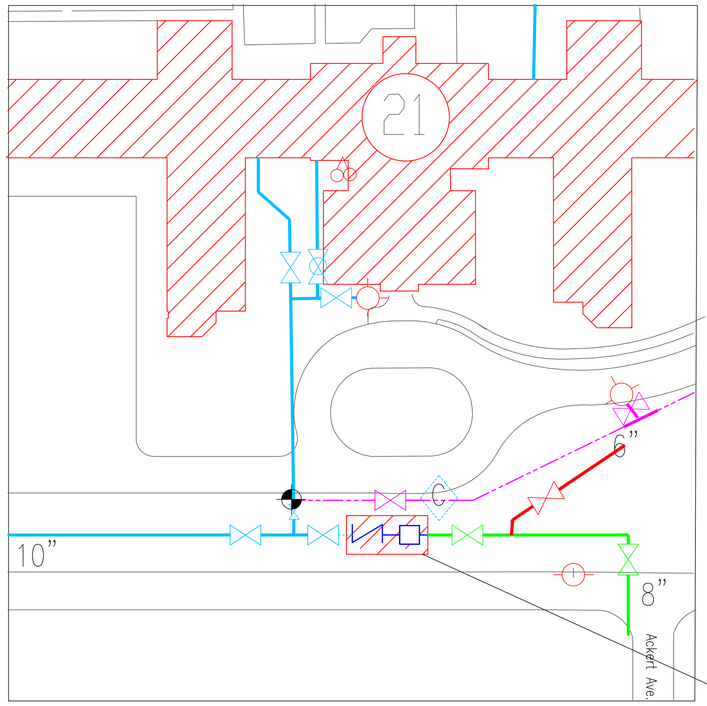

▲ STEEL STRUCTURE TO BE ERECTED AS TO LIFT & MOVE EQUIPMENT AND MATERIALS RELATED TO BACKFLOW PREVENTER WITHIN BRICK HOUSING BUILDING.

▲ ALL ELECTRICAL AS EXISTING SHALL BE MAINTAIN IN NEW BUILDING WITH THE ADDITION OF TWO LED LIGHTS WITHIN INTERIOR TO PROVIDE 100% COVERAGE.

▲ CONCRETE FINISHED FLOOR SHALL BE AN EPOXY APPLICATION. EPOXY SYSTEM TO BE SUBMITTED TO THE GOVT. FOR APPROVAL.

▲ CONCRETE FOUNDATION AT PENETRATIONS SHALL BE WATER PROOF WITH BITUMINOUS WATER PROOFING SYSTEM. TO BE SUBMITTED TO THE GOVT. FOR APPROVAL.

BRICK BUILDINGS ARE TO BE DEMOLISHED & REPLACE WITH NEW BUILDING, COORDINATE WITH COR

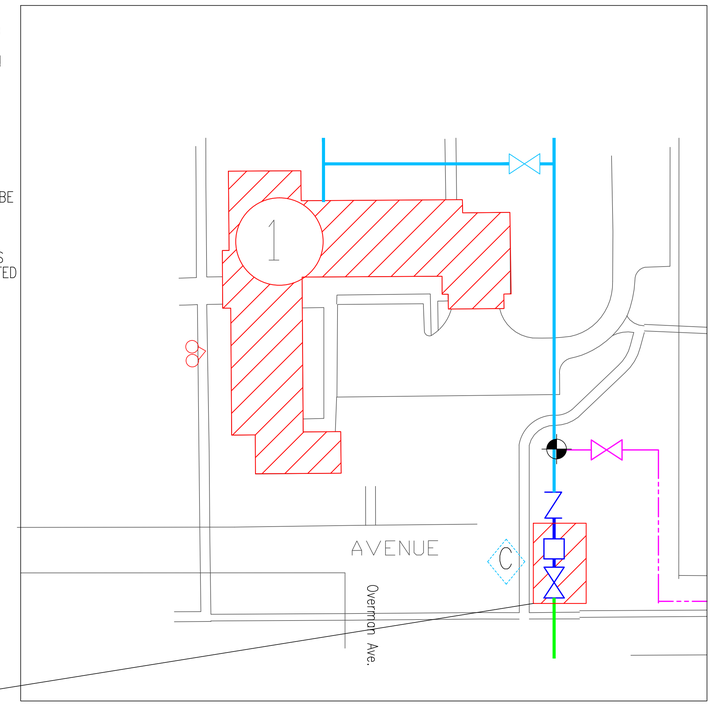

SYMBOLS

- FIRE HYDRANT
- LAWN HYDRANT
- POST INDICATOR VALVE
- CHECK VALVE
- GATE VALVE
- SIAMESE CONN.
- CONNECT NEW TO EXISTING
- EXISTING TREE TO BE REMOVED AND/OR REPLACE
- EXISTING DOMESTIC WATER/FIRE LINE TO BE ABANDON
- EXISTING DOMESTIC WATER/FIRE CITY SUPPLY
- EXISTING DOMESTIC WATER/FIRE NEW PVC
- EXISTING DOMESTIC WATER/FIRE LINE TO BE REPLACED
- NEW DOMESTIC WATER/FIRE LINE/FITTINGS TO BE INSTALLED
- NEW DOMESTIC WATER/FIRE LINE CURRENTLY UNDER CONSTRUCTION

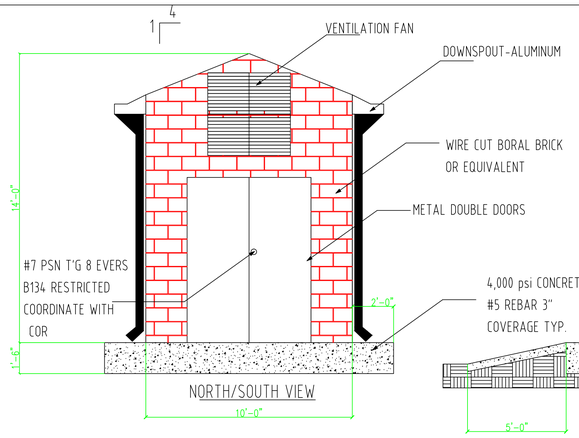

NORTH/SOUTH VIEW

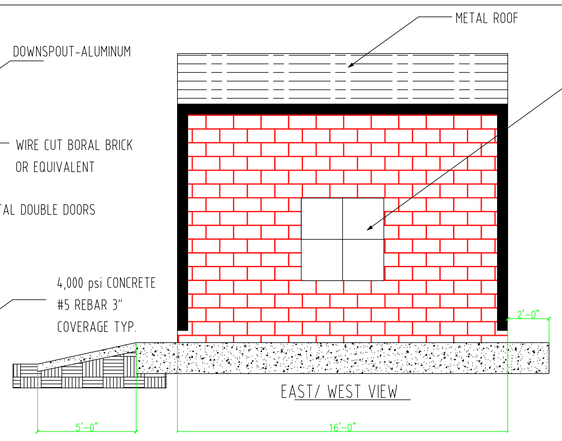

EAST/ WEST VIEW

KEY NOTES:

THIS DRAWING IS FOR GENERAL INFORMATION AND IS NOT TO BE USED FOR CONSTRUCTION, BUT AS THE BASIS OF DESIGN FOR NEW BRICK HOUSE FOR BACKFLOW PREVENTER. CONTRACTOR WILL SUBMIT FOR GOVT. APPROVAL AND STAMPED BY LICENCE ENGINEER WITH RESPECTIVE WORK BUT NOT LIMITED TO FOUNDATION DESIGN, BRICK MASONRY WORK, CONTROL FAN CONTROL BY ENVIRONMENT WITH TWO SWITCHES (ONE FOR 2 - 2X4, 1 FOR 2 OTHER LIGHTS, ALL OUTLETS GFCI) , POWER SUPPLY, AND DOORS/WINDOWS.

DESIGN CRITERIA: BUILDING CODE: 2009 NORTH CAROLINA BUILDING CODE

WIND: BASIC WIND SPEED= 90 MPH

SEISMIC: SS = 0.296
S1 = 0.127
SEISMIC USE GROUP III
IE = 1.25 E SEISMIC DESIGN CATEGORY C
BASIC STRUCTURAL SYSTEM: MOMENT-RESISTING STEEL FARAME
SEISMIC RESISTING SYSTEM: ORDINARY STEEL MOMENT FRAMES
R = 3 (ASCE 7 MODIFIED BY NCBC 2009, SECT. 1617.6.1.1)
ANALYSIS PROCEDURE: ASCE 7, EQUIVALENT LATERAL FORCE PROCEDURE SECT. 9.5.5

SNOW:
PG = 1.0 PSF
I = 1.0

ROOF LIVE LOAD= 20 PSF

FLOOR LIVE LOAD =STRUCTURED, STEEL BEAMS, & BACKFLOW PREVENTER.

FOUNDATION DESIGN IS BASED ON GEO-TECHNICAL REPORT DATED 11 / 24 / 09 BY GEOSCIENCE GROUP, INC.

GENERAL NOTES:

1. REPLACEMENT OF UNDERGROUND MAINS SHALL BE PERFORMED IN PHASES TO MINIMIZE THE SYSTEM DOWN TIME. THE CONTRACTOR SHALL PROVIDE A PHASING PLAN TO THE COTR.
2. ALL NEW PIPING SHALL BE AWWA C900 RESTRAINED JOINT PVC. PROVIDE PROPER RESTRAINED FITTINGS AT CONNECTION TO EXISTING PIPING.
3. ALL DOMESTIC WATER VALVES SHALL BE PROVIDED WITH A VALVE BOX AND 18"x18"x6" THICK CONCRETE PAD, FLUSH WITH FINISHED GRADE – SEE DETAIL.
4. CONTRACTOR TO PERFORM UTILITY DETECTION TO IDENTIFY AND MARK UTILITIES BEFORE DIGGING OPERATIONS BEGIN.
5. LIGHT POLE WIRES ARE DIRECT BURIED AND ARE TO BE APPROACHED WITH CARE AND IF DAMAGED REPAIRED WITHIN 24 HOURS AND/OR PROVIDE FOR TEMPORARY LIGHTS.
6. ANY HIGH VOLTAGE AREAS ARE TO BE COORDINATED WITH DUKE POWER AND DUE TO VAMC OPERATIONS MUST SHUTDOWNS WOULD OCCUR ON WEEKEND HOURS. PLAN AS CONDITIONS REQUIRED
7. CONTRACTOR TO VERIFY ALL BUILDING'S TIE–IN, SOME BUILDINGS FOR EXAMPLE BLDG 6 TRENCH WILL REQUIRE SHORING AND OTHER SAFETY MEASURES TO PROTECT WORKERS AND VAMC SALISBURY PATIENTS, STAFF, AND PROPERTY.

A — ABANDON STEM LINE ℄ APPROX. 11" FROM BACK OF CURB AND ITS DEPTH APPROX. 4'–2" FORM TOP OF CURB. THERE ARE ALSO, CHILL WATER LINES IN THIS AREA AND THEY ARE LOCATED WEST OF EXISTING ℄ DOMESTIC WATER LINE APPROX. 4'–3". THE ℄ DOMESTIC LINE IS APPROX. 14'–3" FROM BACK OF CURB.

B — NO EQUIPMENT OR FOOT TRAFFIC IN THIS AREA WITHOUT THE PERMISSION FROM THE NC STATE HOME. ANY DAMAGED TO EXISTING SYSTEM WILL BE RESPONSIBILITY OF THE CONTRACTOR.

C — EXISTING BRICK HOUSING TO BE DEMOLISHED AN NEW BRICK HOUSING TO BE BUILT. SEE DRAWING C–103

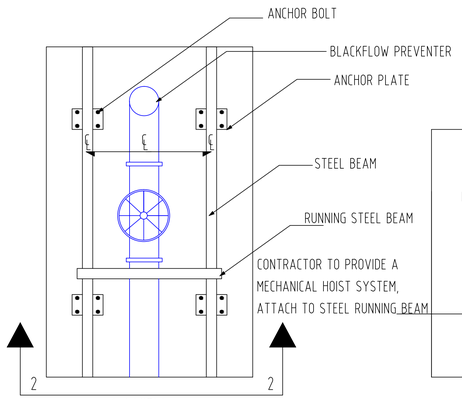

1-1 VIEW

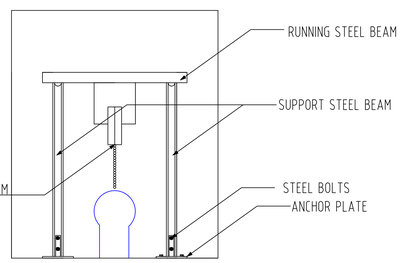

2-2 VIEW

MASONRY DETAIL

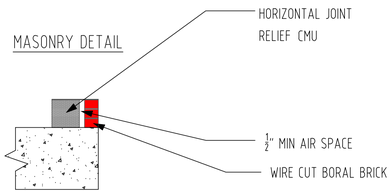

KEY NOTES:

WEEPHOLES 24 o.c.

CONCRETE RAMP; SLOPE FROM ENTRANCE POINT

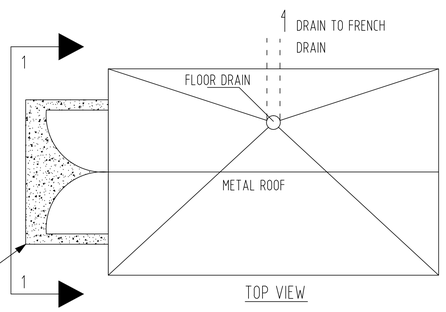

TOP VIEW

Revision	Date

RECOMMEND APPROVAL

REQUESTER	Date		
CHIEF OF SERVICE	Date	CHIEF OF STAFF	Date
ASSOC. DIR. PATIENT CARE SVC.	Date	ASSOC. DIR. for OPERATIONS	Date
APPROVAL BY: MEDICAL CENTER DIRECTOR			Date

Drawing Title: BRICK HOUSING: BACKFLOW PREVENTERS

Approved: Safety Manager/M&O Supervisor

Approved:Chief of Facilities Management Svr.

Project Title: REPLACE DOMESTIC WATER PIPING–NORTH LOOP

Building Number: CAMPUS | Checked | Drawn: BLF

Location: W.G.(Bill) Hefner Medical Center, 1601 Brenner Ave., Salisbury NC 28144

Date: 29 JUNE 2012

Project No. 659-12-253

DRAWING NO. C–103

DWG. 8 OF 8

Department of Veterans Affairs