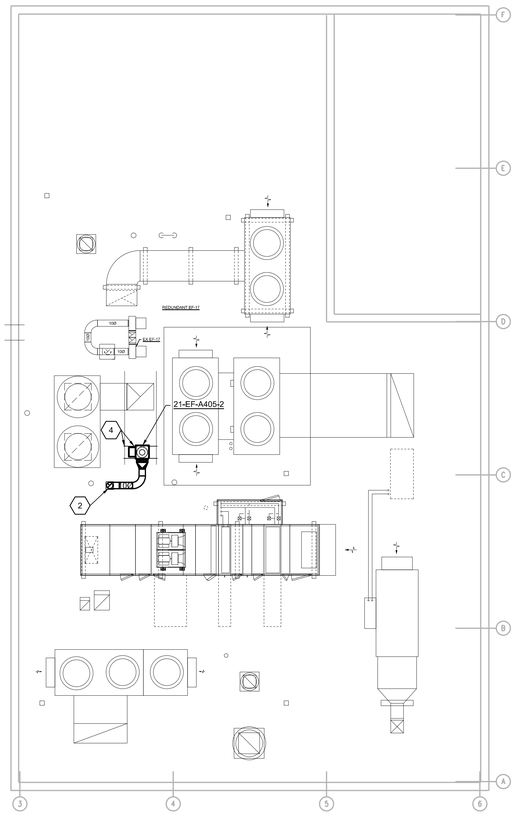

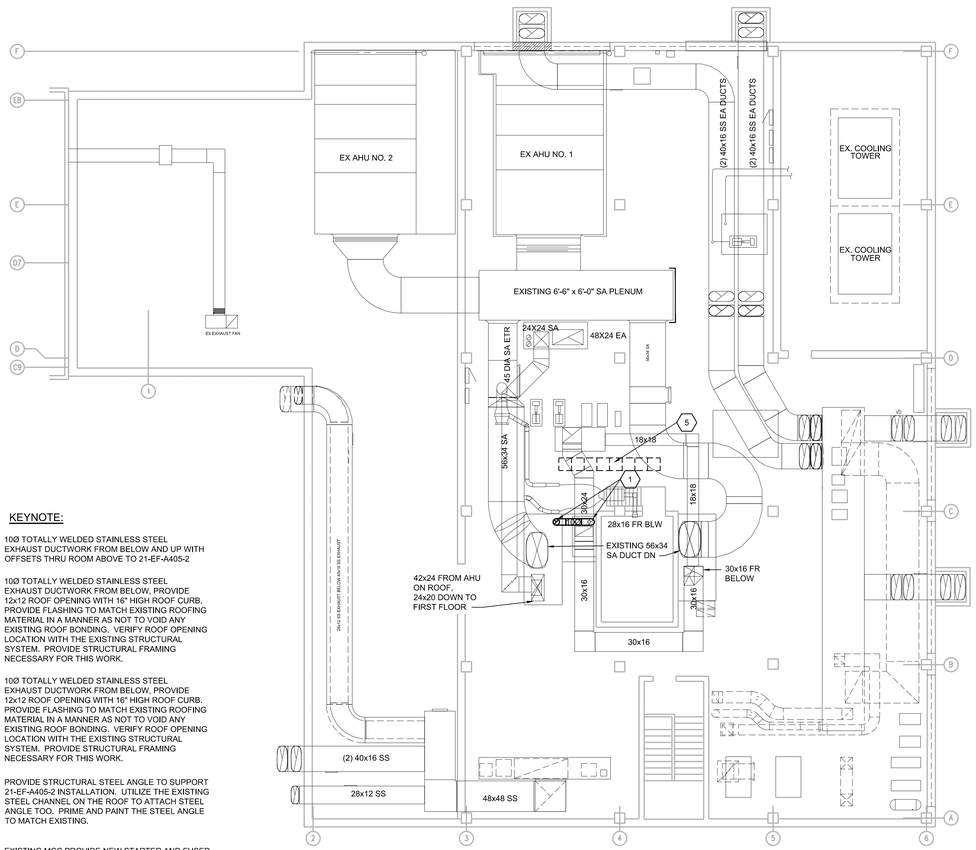

KEYNOTE:

1. 10Ø TOTALLY WELDED STAINLESS STEEL EXHAUST DUCTWORK FROM BELOW AND UP WITH OFFSETS THRU ROOM ABOVE TO 21-EF-A405-2
2. 10Ø TOTALLY WELDED STAINLESS STEEL EXHAUST DUCTWORK FROM BELOW, PROVIDE 12x12 ROOF OPENING WITH 16" HIGH ROOF CURB. PROVIDE FLASHING TO MATCH EXISTING ROOFING MATERIAL IN A MANNER AS NOT TO VOID ANY EXISTING ROOF BONDING. VERIFY ROOF OPENING LOCATION WITH THE EXISTING STRUCTURAL SYSTEM. PROVIDE STRUCTURAL FRAMING NECESSARY FOR THIS WORK.
3. 10Ø TOTALLY WELDED STAINLESS STEEL EXHAUST DUCTWORK FROM BELOW, PROVIDE 12x12 ROOF OPENING WITH 16" HIGH ROOF CURB. PROVIDE FLASHING TO MATCH EXISTING ROOFING MATERIAL IN A MANNER AS NOT TO VOID ANY EXISTING ROOF BONDING. VERIFY ROOF OPENING LOCATION WITH THE EXISTING STRUCTURAL SYSTEM. PROVIDE STRUCTURAL FRAMING NECESSARY FOR THIS WORK.
4. PROVIDE STRUCTURAL STEEL ANGLE TO SUPPORT 21-EF-A405-2 INSTALLATION. UTILIZE THE EXISTING STEEL CHANNEL ON THE ROOF TO ATTACH STEEL ANGLE TOO. PRIME AND PAINT THE STEEL ANGLE TO MATCH EXISTING.
5. EXISTING MCC PROVIDE NEW STARTER AND FUSED DISCONNECT FOR 21-EF-A405-2, -2HP.

1 ROOF PLAN

0 4' 8' 16'

SCALE: 1/8" = 1'-0"

2 PENTHOUSE FLOOR PLAN

0 4' 8' 16'

SCALE: 1/8" = 1'-0"

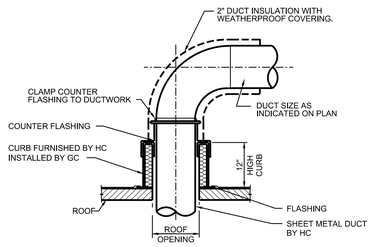

DUCT THRU ROOF DETAIL

NO SCALE

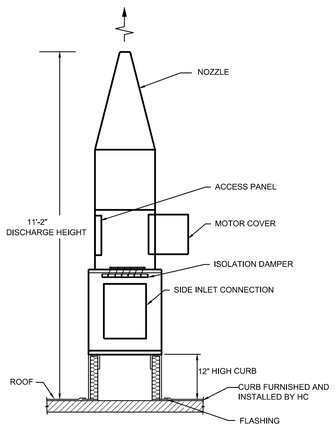

CyTOF EXHAUST FAN DETAIL

NO SCALE

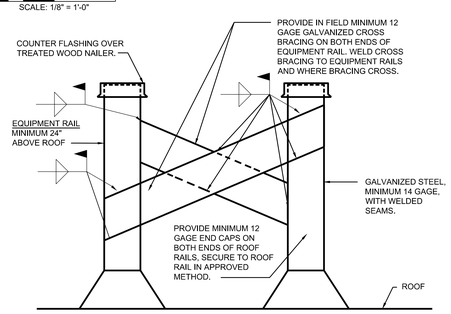

EQUIPMENT RAIL FOR ROOF MOUNTING ACCU

NO SCALE

Revisions	Date

H.F. LENZ COMPANY
1407 Scalp Avenue
Johnstown, PA 15904
Phone: 814-269-9300
FAX: 814-269-9301
cadd@hflenz.com
www.hflenz.com
Engineering

Drawing Title: PENTHOUSE FLOOR PLAN AND ROOF PLAN	Project Title: 4TH FLOOR IMAGING SYSTEM		Date: 04/26/2018
			Project No.: 642-17-300
Approved: Division Chief	Building Number: 21	Checked: TME / Drawn: NJB	DRAWING NO.: M102
Approved: Service Director	Location: VAMC Philadelphia, Pennsylvania		Dwg. 2 Of 2

Veterans Administration