VAMC-WADE PARK CLEVELAND
DIETETICS ADMIN SPACE AND STORAGE

100% CD SUBMISSION - NOT FOR CONSTRUCTION 06-18-12

DEPARTMENT OF VETERANS AFFAIRS

10701 EAST BOULEVARD
CLEVELAND, OHIO 44106

VAMC PROJECT NO.: 541-12-113

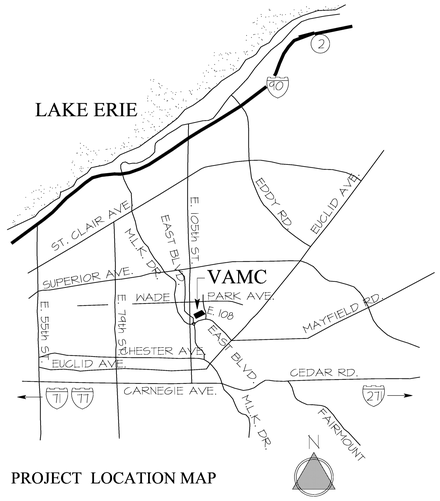

PROJECT LOCATION MAP

INDEX OF DRAWINGS:

1-X1 COVER SHEET

ASBESTOS ABATEMENT
1-ASB-1 PARTIAL FIRST FLOOR ASBESTOS ABATEMENT PLAN
1-ASB-2 STANDARD ASBESTOS ABATEMENT DETAILS

ARCHITECTURAL
1-1 SYMBOL LEGENDS/FIRESTOP SCHEDULE/WALL TYPES
1-2 FIRST FLOOR KEY PLAN
1-3 PARTIAL FIRST FLOOR LIFE SAFETY PLAN
1-4 PARTIAL FIRST FLOOR DEMOLITION PLAN

2-1 PARTIAL FIRST FLOOR FLOOR PLAN

3-1 PARTIAL FIRST FLOOR REFLECTED CEILING PLAN

4-1 INTERIOR ELEVATIONS, SECTIONS AND DOOR AND HARDWARE SCHEDULE AND DETAILS

5-1 PARTIAL FIRST FLOOR FINISH PLAN AND FINISH SCHEDULE

FIRE PROTECTION
1-FP1 FIRE PROTECTION LEGEND AND GENERAL NOTES
1-FP2 PARTIAL FIRST FLOOR FIRE PROTECTION DEMOLITION PLAN
1-FP3 PARTIAL FIRST FLOOR FIRE PROTECTION NEW PLAN

PLUMBING
1-P1 PLUMBING LEGEND AND GENERAL NOTES
1-P2 SPATIAL FIRST FLOOR PLUMBING DEMOLITION PLAN

MECHANICAL
1-H1 HVAC LEGEND, GENERAL NOTES AND SCHEDULES
1-H2 HVAC DETAILS AND CONTROLS
1-H3 PARTIAL FIRST FLOOR HVAC DEMOLITION PLAN
1-H4 PARTIAL FIRST FLOOR HVAC DUCTWORK NEW PLAN
1-H5 PARTIAL FIRST FLOOR HVAC PIPING NEW PLAN
1-H6 PARTIAL SECOND FLOOR/ROOF HVAC DUCTWORK NEW PLAN

ELECTRICAL
1-E1 ELECTRICAL LEGEND
1-E2 ELECTRICAL LEGEND
1-E3 LIGHTING FIXTURE SCHEDULE
1-E4 FIRST FLOOR ELECTRICAL KEY PLAN
1-E5 PARTIAL FIRST FLOOR LIGHTING AND FIRE ALARM DEMOLITION PLAN
1-E6 PARTIAL FIRST FLOOR POWER AND TELECOMMUNICATIONS DEMOLITION PLAN
1-E7 PARTIAL FIRST FLOOR LIGHTING AND FIRE ALARM NEW PLAN
1-E8 PARTIAL FIRST FLOOR POWER AND TELECOMMUNICATION NEW PLAN
1-E9 POWER DISTRIBUTION ONE-LINE DIAGRAM AND PANELBOARD SCHEDULES
1-E10 ELECTRICAL DETAILS
1-E11 TECHNOLOGY DETAILS
1-E12 FIRE ALARM SYSTEM RISER
1-E13 SECURITY SYSTEM RISER

ARCHITECT:
MAKOVICH & PUSTI
ARCHITECTS, INC.

111 FRONT STREET
BEREA, OHIO 44017
Ph.: 440-891-8910
Fax: 440-891-0086
EMAIL: mmolchan@mparc.com

MECHANICAL & ELECTRICAL ENGINEERS:
FREDRICK, FREDRICK, & HELLER
ENGINEERS, INC.

672 EAST ROYALTON ROAD
BROADVIEW HEIGHTS, OH 44147
Ph.: 440-546-9696
Fax: 440-546-9699
EMAIL: FFH@FFHEngineers.com

ASBESTOS ABATEMENT:
STEPHEN J. SEBESTA & ASSOCIATES, INC
ENVIRONMENTAL HEALTH ENGINEERS

17830 ENGLEWOOD DRIVE, SUITE 16
CLEVELAND, OHIO 44130
Ph.: 216-781-0060
Fax: 216-781-0024
EMAIL: caj@sjs-inc.com

FOR CONSTRUCTION

FULLY SPRINKLERED

FINAL CD SUBMISSION - FOR CONSTRUCTION	07-11-12
Revisions:	Date

CONSULTANTS:

ARCHITECT/ENGINEERS:

MAKOVICH & PUSTI ARCHITECTS, INC.
111 FRONT STREET BEREA, OHIO 44017
(440) 891-8910 p (440) 891-0086 f

FREDRICK, FREDRICK & HELLER ENGINEERS, INC.
672 EAST ROYALTON ROAD
BROADVIEW HTS., OHIO 44147
TEL: (440) 546-9696
FAX: (440) 546-9699

Drawing Title: COVER SHEET INDEX OF DRAWINGS

Approved: Project Director

Project Title: VAMC WADE PARK CLEVELAND DIETETICS ADNIM SPACE AND STORAGE

Location: 10701 EAST BLVD, CLEVELAND, OHIO 44106

Date | Checked By: MJM | Drawn By

Project Number: 541-12-113

Building Number: 1

Drawing Number: 1-X1

Office of Construction and Facilities Management

Department of Veterans Affairs

VA FORM 08-6231

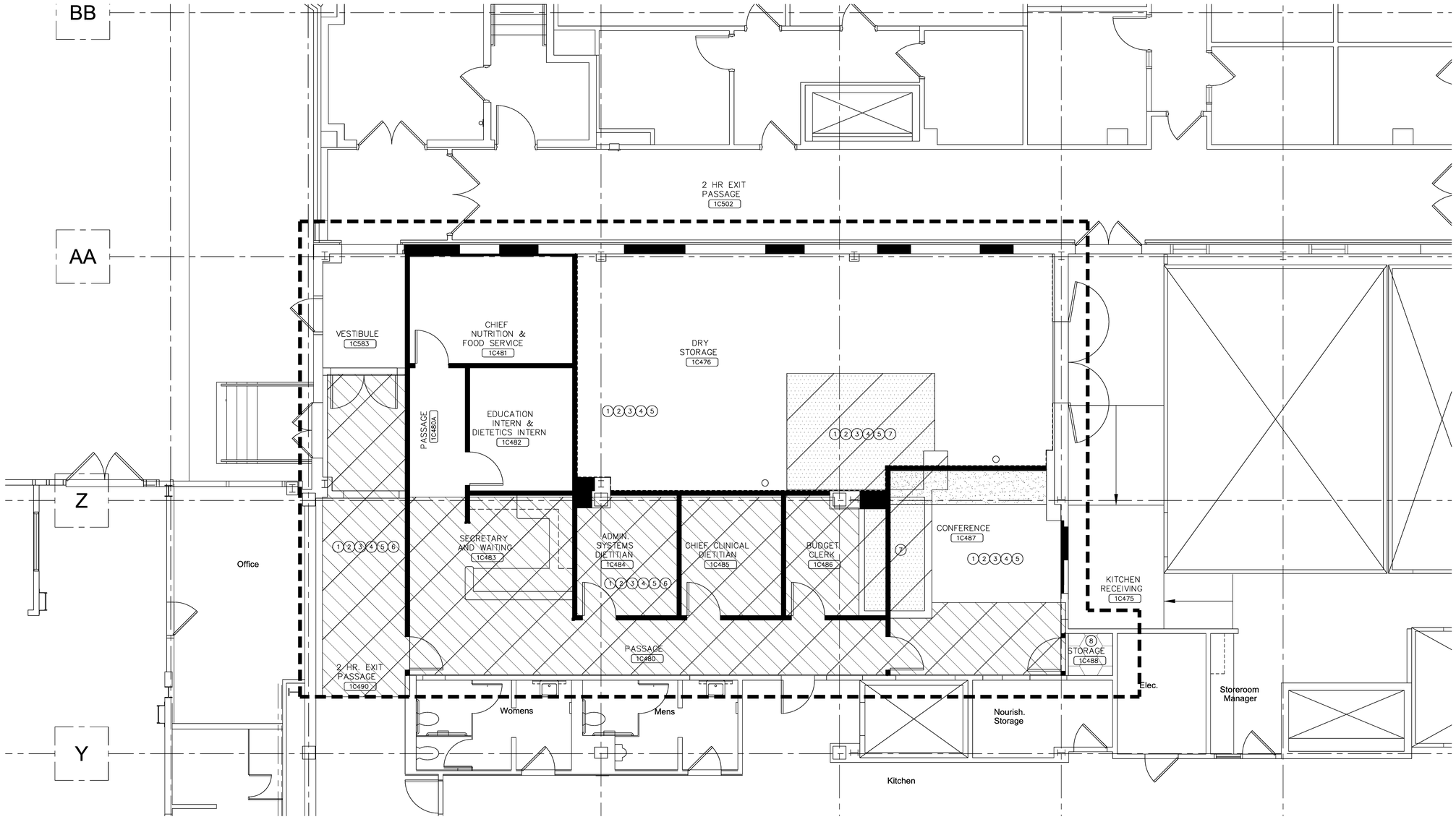

PARTIAL FIRST FLOOR ASBESTOS ABATEMENT PLAN

SCALE: 1/4"=1'-0"

NOTES (#)

1. INSTALL CRITICAL BARRIERS AND WARNING SIGNS (SEE DETAIL SHEET 1-ASB-2)
2. INSTALL 6 MIL POLYETHYLENE DROP CLOTH BELOW PIPE INSULATION JOINTS TO AT LEAST 6 FEET HORIZONTAL DISTANCE FROM EACH ACM JOINT TO BE REMOVED
3. INSTALL NEGATIVE AIR MACHINE FOR LOCAL EXHAUST VENTILATION ADJACENT TO WORK AREA AND ROUTE EXHAUST TO OUTSIDE OF BUILDING THROUGH SECURED OUTSIDE DOOR (SEE DETAIL SHEET 1-ASB-2)
4. INSTALL THREE STAGE DECONTAMINATION UNIT (SEE DETAIL SHEET 1-ASB-2)
5. REMOVE AND DISPOSE OF APPROXIMATELY 75 EACH ASBESTOS-CONTAINING PIPE INSULATION JOINTS IN ACCORDANCE WITH APPLICABLE PROVISIONS OF SECTION 028213.13 OF SPECIFICATIONS
6. REMOVE AND DISPOSE OF APPROXIMATELY 980 SQ FT OF ASBESTOS-CONTAINING MASTIC BELOW NON ASBESTOS-CONTAINING 12"x12" FLOOR TILE IN ACCORDANCE WITH APPLICABLE PROVISIONS OF SECTION 028213.19 OF SPECIFICATIONS
7. REMOVE AND DISPOSE OF APPROXIMATELY 190 SQ FT OF ASBESTOS-CONTAINING 9"x9" FLOOR TILE AND MASTIC
8. REMOVE AND DISPOSE OF APPROXIMATELY 15 SQ FT OF ACM MASTIC

LEGEND

- 12"X12" FLOOR TILE
- 9"X9" FLOOR TILE
- ACM PIPE INSULATION JOINTS
- ACM MASTIC

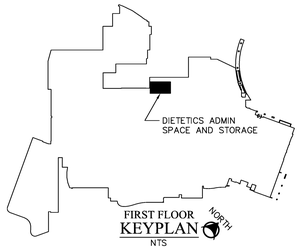

FIRST FLOOR KEYPLAN

NTS

FOR CONSTRUCTION

FULLY SPRINKLERED

FINAL CD SUBMISSION – FOR CONSTRUCTION	07-11-12
Revisions:	Date

CONSULTANTS:

STEPHEN J. SEBESTA & ASSOCIATES, INC.

CONSULTING ENVIRONMENTAL HEALTH ENGINEERS

17830 ENGLEWOOD DRIVE, SUITE 16, CLEVELAND, OHIO 44130 (216) 781-0060

ARCHITECT/ENGINEERS:

MAKOVICH & PUSTI ARCHITECTS, INC.
111 FRONT STREET BEREA, OHIO 44017
(440) 891-9919 p (440) 891-0086 f

FREDRICK, FREDRICK & SHELLER ENGINEERS, INC.
872 EAST REPUBLIC ROAD
BROADVIEW HEIGHTS, OHIO 44147
(440) 526-4900
FAX (440) 546-0888

Drawing Title: PARTIAL FIRST FLOOR ASBESTOS ABATEMENT PLAN	Project Title: VAMC WADE PARK CLEVELAND DIETETICS ADMIN SPACE AND STORAGE	Project Number: 541-12-113	Office of Construction and Facilities Management
Approved: Project Director	Location: 10701 EAST BLVD, CLEVELAND, OHIO 44106	Building Number: 1	
	Date: 07-11-12 / Checked By: EMO / Drawn By: CAJ	Drawing Number: 1-ASB-1	Department of Veterans Affairs

VA FORM 08-6231

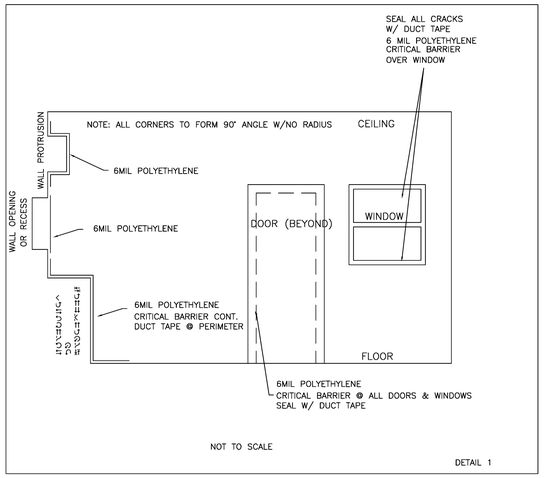

DETAIL 1

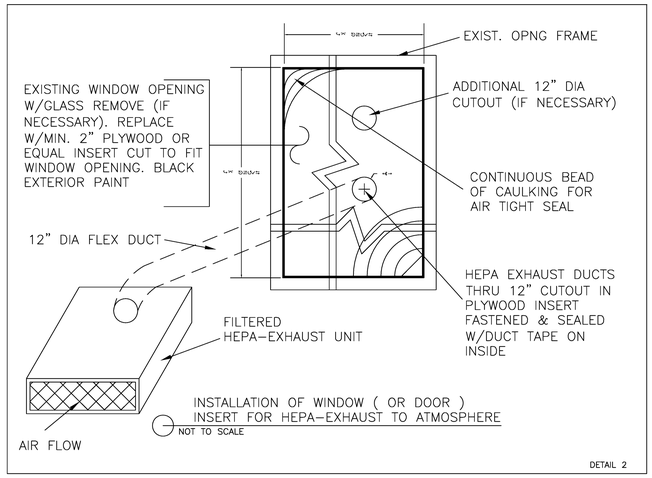

DETAIL 2

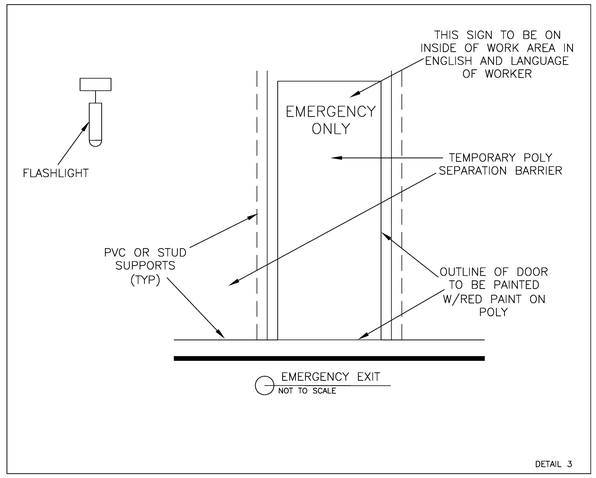

DETAIL 3

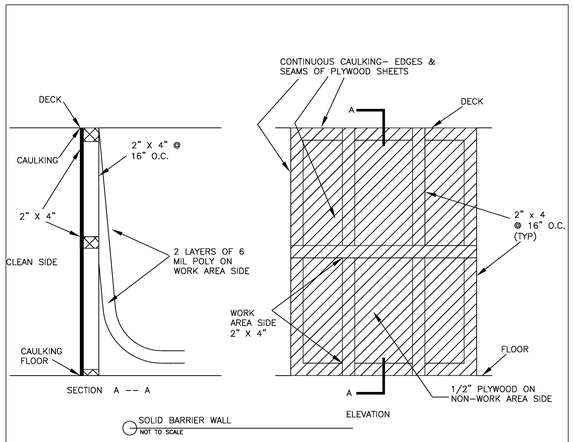

DETAIL 4

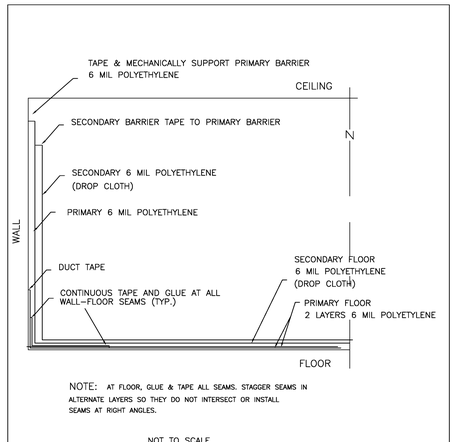

DETAIL 5

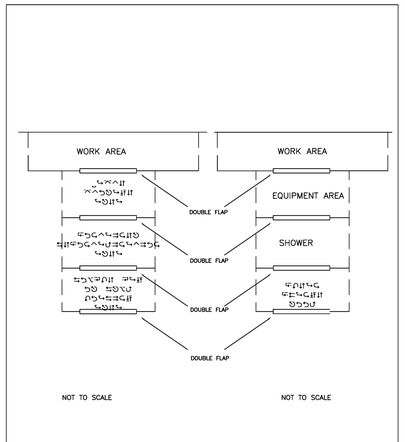

DETAIL 6

1. ALL SHEETING TO BE 6 MIL POLYETHYLENE
2. SECURE TOP EDGE OF SHEET #1 ALONG TOP EDGE OF OPENING
3. SECURE SHEET #1 ALONG ONE VERTICAL SIDE OF OPENING
4. SECURE TOP EDGE OF SHEET #2 ALONG TOP-EDGE OF OPENING
5. SECURE SHEET #2 ALONG SIDE OF OPENING, OPPOSITE OPENING SIDE OF SHEET #1.

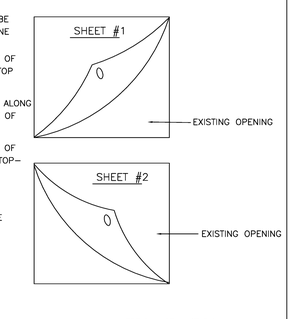

DETAIL 7

STANDARD ASBESTOS ABATEMENT DETAILS

NOT TO SCALE

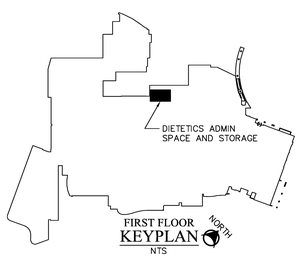

FOR CONSTRUCTION

FULLY SPRINKLERED

FINAL CD SUBMISSION - FOR CONSTRUCTION	07-11-12
Revisions:	Date

CONSULTANTS:

STEPHEN J. SEBESTA & ASSOCIATES, INC.
CONSULTING ENVIRONMENTAL HEALTH ENGINEERS
17830 ENGLEWOOD DRIVE, SUITE 16, CLEVELAND, OHIO 44130 (216) 781-0060

ARCHITECT/ENGINEERS:

MAKOVICH & PUSTI ARCHITECTS, INC.
111 FRONT STREET BEREA, OHIO 44017
(440) 891-0919 p (440) 891-0086 f

FREDRICK, FREDRICK & SIELLER ENGINEERS, INC.
672 EAST ROYALTON ROAD
BROADVIEW HEIGHTS, OHIO 44147
PH. (440) 546-0900
FAX (440) 546-0906

Drawing Title: STANDARD ASBESTOS ABATEMENT DETAILS	Project Title: VAMC WADE PARK CLEVELAND DIETETICS ADMIN SPACE AND STORAGE		Project Number: 541-12-113
Approved: Project Director	Location: 10701 EAST BLVD, CLEVELAND, OHIO 44106		Building Number: 1
	Date: 07-11-12	Checked By: EMO / Drawn By: CAJ	Drawing Number: 1-ASB-2

Office of Construction and Facilities Management

Department of Veterans Affairs

VA FORM 08-6231

THROUGH-PENETRATION FIRESTOP SYSTEM SCHEDULE

FIRESTOP SYSTEMS ARE LISTED USING THE ALPHA-ALPHA-NUMERIC IDENTIFICATION SYSTEM PUBLISHED IN UL'S FIRE RESISTANCE DIRECTORY, VOL 2

TYPE OF PENETRATE	CONSTRUCTION					
	FLOOR PENETRATION SYSTEMS (FIRST ALPHA COMPONENT = C OR F)			WALL PENETRATION SYSTEMS (FIRST ALPHA COMPONENT = C OR W)		
	CONCRETE FLOORS WITH A MINIMUM THICKNESS LESS THAN OR EQUAL TO 5 INCHES	CONCRETE FLOORS WITH A MINIMUM THICKNESS GREATER THAN 5 INCHES	FRAMED FLOORS	CONCRETE OR MASONRY WALLS WITH A MIN. THICKNESS LESS THAN OR EQUAL TO 8 INCHES	CONCRETE OR MASONRY WALLS WITH A MIN. THICKNESS GREATER THAN 8 INCHES	FRAMED WALLS
NO PENETRATING ITEMS	C-AJ-0001-0999 OR F-A-0001-0999	C-BJ-0001-0999	X	C-AJ-0001-0999 OR F-A-0001-0999 OR W-J-0001-0999	X	W-L-0001-0999
METALLIC PIPE, CONDUIT, OR TUBING	C-AJ-1001-1999 OR F-A-1001-1999	C-BJ-0001-1999 OR C-BK-1001-1999 OR F-B-1001-1999	F-C-1001-1999	C-AJ-1001-1999 OR F-A-1001-1999 OR W-J-1001-1999	C-BK-1001-1999 OR W-K-1001-1999	W-L-1001-1999
NONMETALLIC PIPE, CONDUIT, OR TUBING	C-AJ-2001-2999 OR F-A-2001-2999	C-BJ-2001-2999 OR F-B-2001-2999	F-C-2001-2999	C-AJ-2001-2999 OR C-BJ-2001-2999 OR W-J-2001-2999	X	W-L-2001-2999
ELECTRICAL CABLES	C-AJ-3001-3999 OR F-A-3001-3999	C-BJ-3001-3999 OR F-B-3001-3999	F-C-3001-3999	C-AJ-3001-3999 OR C-BJ-3001-3999 OR W-J-3001-3999	X	W-L-3001-3999
CABLE TRAYS WITH ELECTRICAL CABLES	C-AJ-4001-4999 OR F-A-4001-4999	C-BJ-4001-4999	X	C-AJ-4001-4999 OR C-BJ-4001-4999 OR W-J-4001-4999	W-K-4001-4999	W-L-4001-4999
INSULATED PIPES	C-AJ-5001-5999 OR F-A-5001-5999	C-BJ-5001-5999	F-C-5001-5999	C-AJ-5001-5999 OR W-J-5001-5999	X	W-L-5001-5999
MISCELLANEOUS ELECTRICAL PENETRANTS	C-AJ-6001-6999 OR F-A-6001-6999	X	X	C-AJ-6001-6999	X	W-L-6001-6999
MISCELLANEOUS MECHANICAL PENETRANTS	C-AJ-7001-7999	X	F-C-7001-7999	C-AJ-7001-7999 OR W-J-7001-7999	X	W-L-7001-7999
GROUPINGS OF PENETRATIONS	C-AJ-8001-8999 OR F-A-8001-8999	C-BJ-8001-8999	F-C-8001-8999	C-AJ-8001-8999 OR C-BJ-8001-8999 OR W-J-8001-8999	X	W-L-8001-8999

FOR EACH LOCATION WHERE A FIRE-RESISTANCE-RATED FLOOR OR WALL ASSEMBLY IS PENETRATED, PROVIDE A UL-LISTED THROUGH- PENETRATION FIRESTOP SYSTEM SELECTED FROM THE APPLICABLE UL NUMBER RANGE LISTED ABOVE THAT COMPLIES WITH SPECIFICATION SECTION 07270 - FIRESTOPPING SYSTEMS AND IS SUITABLE FOR THE PENETRATION CONDITIONS INDICATED FOR THE PROJECT. SUBMIT PRODUCT DATA FOR EACH SYSTEM TO BE USED.

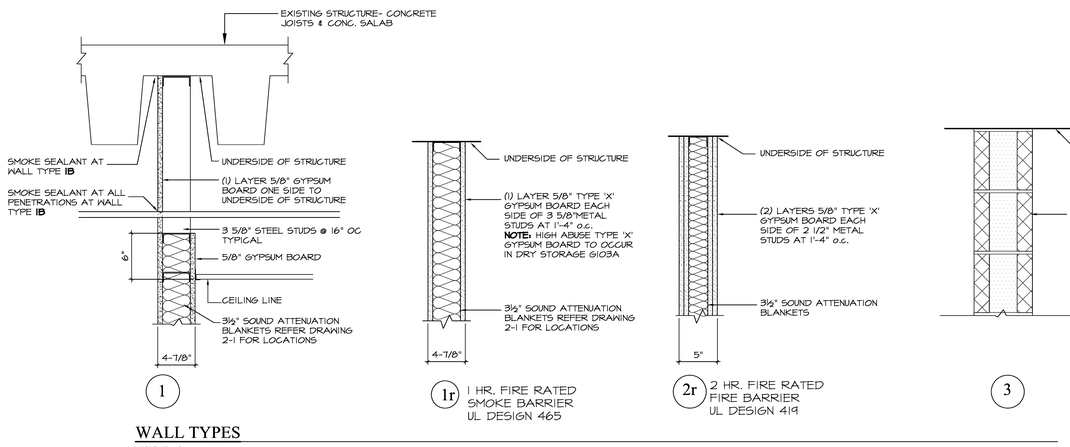

WALL TYPES

1-1/2"=1'-0'

SYMBOLS

101 ROOM NUMBER

2-C345A DOOR NUMBER

INTERIOR ELEVATION

A — ELEVATION NUMBER

101 / 1-A1-1 — ROOM NUMBER; DRAWING ON WHICH ELEVATION APPEARS

SECTION

0 / 1-A1-1 — SECTION NUMBER; DRAWING DETAIL IS REFERENCED

X — WALL TYPE - REFER TO DWG. 1-1

INDICATES LOCATION OF SOUND BATT INSUL.

CONSTRUCTION

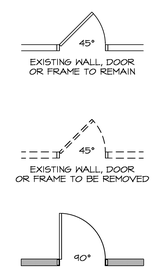

ABBREVIATIONS

@	AT	JT	JOINT
AC	AIR CONDITIONING	L	LONG
ACP	ACOUSTIC CEILING PANELS	LAV	LAVATORY
ACT	ACOUSTIC CEILING TILE	LF	LINEAL FEET
ADA	AMERICANS WITH DISABILITIES ACT	MAX	MAXIMUM
AFF	ABOVE FINISH FLOOR	MECH	MECHANICAL
ALT	ALTERNATE	MIN	MINIMUM
ARCH	ARCHITECTURAL	MO	MASONRY OPENING
A/V	AUDIO/VISUAL	N	NORTH
B	BOTTOM	N/A	NOT APPLICABLE
BLDG	BUILDING	N/C	NOT IN CONTRACT
CG	CORNER GUARD	NO	NUMBER
CLG	CEILING	NOM	NOMINAL
CMU	CONCRETE MASONRY UNIT	NSF	NET SQUARE FEET
CONC	CONCRETE	NTS	NOT TO SCALE
CONT	CONTINUOUS	OC	ON CENTER
COORD	COORDINATE	OCC	OCCUPANT(S)
CPT	CARPET	OH	OVERHEAD
CR	CRASH RAIL	PLYWD	PLYWOOD
DET	DETAIL	PT	PAINT
DIA	DIAMETER	PTD	PAINTED
DN	DOWN	REF	REFERENCE
DWG	DRAWING(S)	REV	REVISED
EA	EACH	RM	ROOM
ELEC	ELECTRICAL	SCHED	SCHEDULE
ELEV	ELEVATION	SF	SQUARE FEET
EQ	EQUAL	SIM	SIMILAR
ETR	EXISTING TO REMAIN	SQ	SQUARE
EXIST	EXISTING	SS	SOLID SURFACE
EXP	EXPANSION	S/S	STAINLESS STEEL
EXT	EXTERIOR	ST	STEEL
FEC	FIRE EXTINGUISHER CABINET	STRUC	STRUCTURAL
FIN	FINISH	TEMP	TEMPERED
FL	FLOOR	TG	TEMPERED GLASS
FRK	FOIL REINFORCED KRAFT	TIG	TEMPERED INSULATED GLASS
FRT	FIRE RETARDANT TREATED	TYP	TYPICAL
FT	FEET / FULL TILE	UL	UNDERWRITERS LABORATORY
FV	FIELD VERIFY	UON	UNLESS OTHERWISE NOTED
GA	GAUGE	VCT	VINYL COMPOSITION TILE
GALV	GALVANIZED	VERT	VERTICAL
GL	GLASS	VIF	VERIFY IN FIELD
GYP BD	GYPSUM BOARD	VOL	VOLUME
H	HIGH	W	WIDE
HM	HOLLOW METAL	W/	WITH
HT	HEIGHT	WD	WOOD
IG	INSULATED GLASS	WP	WALL PROTECTION
INSUL	INSULATED	WWF	WELDED WIRE FABRIC

FOR CONSTRUCTION

FULLY SPRINKLERED

Revisions:	Date
FINAL CD SUBMISSION - FOR CONSTRUCTION	07-11-12

CONSULTANTS:

STATE OF OHIO — DAVID J. PUSTI 7906332 — REGISTERED ARCHITECT

David J. Pusti, License #7906332
Expiration Date 12/31/2013

ARCHITECT/ENGINEERS:

MAKOVICH & PUSTI ARCHITECTS, INC.
111 FRONT STREET BEREA, OHIO 44017
(440) 891-8919 p (440) 891-0086 f

FREDRICK, FREDRICK & HELLER ENGINEERS, INC.
672 EAST ROYALTON ROAD
BROADVIEW HTS., OHIO 44147
TEL. (440) 546-9690
FAX (440) 546-9689

Drawing Title: SYMBOL LEGENDS / FIRESTOP SCHEDULE / WALL TYPES

Approved: Project Director

Project Title: VAMC WADE PARK CLEVELAND DIETETICS ADMIN SPACE AND STORAGE

Location: 10701 EAST BLVD, CLEVELAND, OHIO 44106

Date | Checked By: MJM | Drawn By

Project Number: 541-12-113

Building Number: 1

Drawing Number: 1-1

Office of Construction and Facilities Management

Department of Veterans Affairs

VA FORM 08-6231

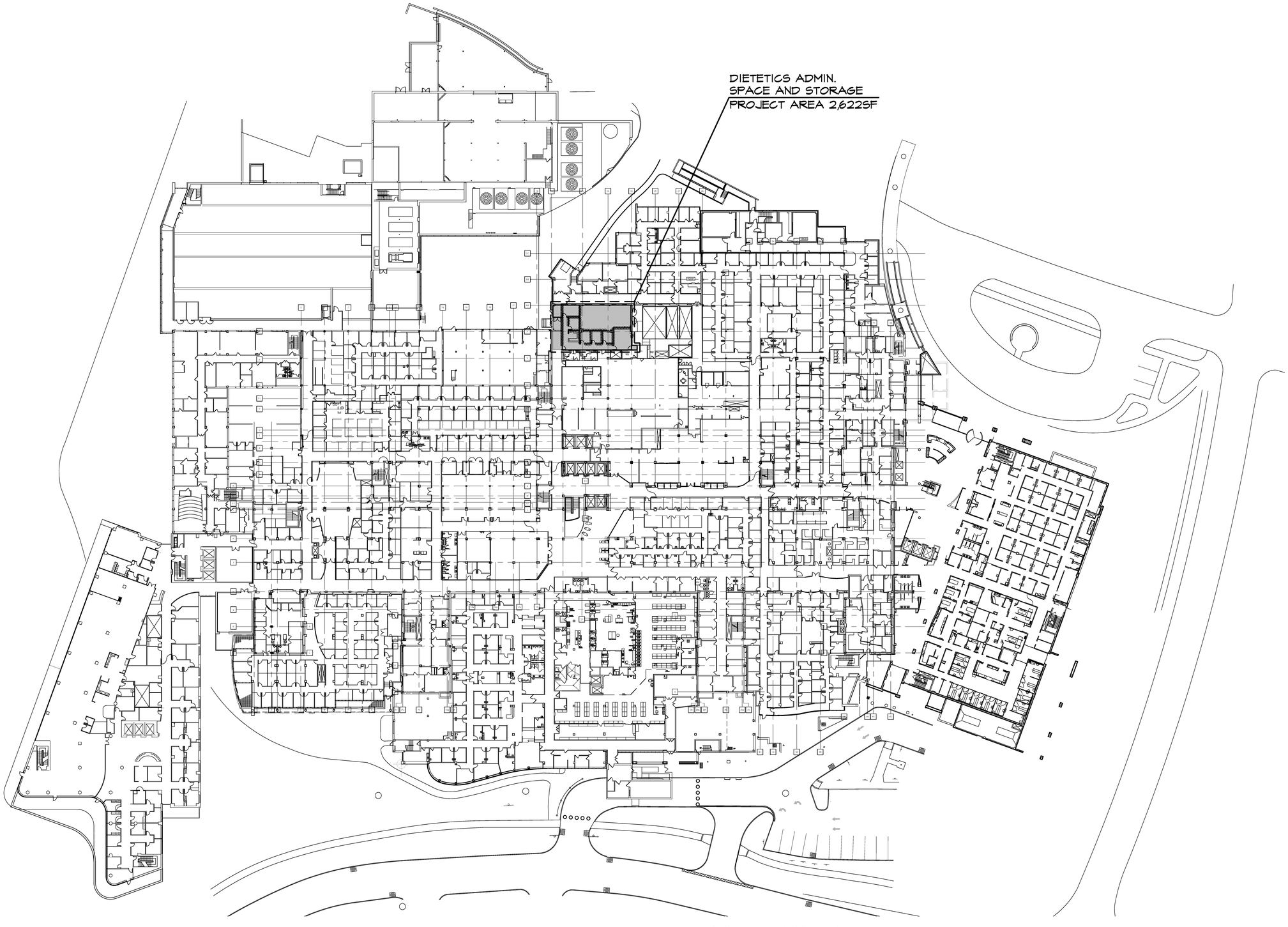

BASEMENT FLOOR KEY PLAN
NOT TO SCALE

DRAWING NORTH

FOR CONSTRUCTION

FULLY SPRINKLERED

FINAL CD SUBMISSION - FOR CONSTRUCTION	07-11-12
Revisions:	Date

CONSULTANTS:

STATE OF OHIO
DAVID J. PUSTI
7906332
REGISTERED ARCHITECTS

David J. Pusti, License #7906332
Expiration Date 12/31/2013

ARCHITECT/ENGINEERS:

MAKOVICH & PUSTI
ARCHITECTS, INC.
111 FRONT STREET BEREA, OHIO 44017
(440) 891-9910 p (440) 891-0086 f

FREDRICK, FREDRICK & HELLER
ENGINEERS, INC.
672 EAST ROYALTON ROAD
BROADVIEW HTS., OHIO 44147
TEL (440) 546-9000
FAX (440) 546-9099

Drawing Title: FIRST FLOOR KEY PLAN

Approved: Project Director

Project Title: VAMC WADE PARK CLEVELAND DIETETICS ADMIN SPACE AND STORAGE

Location: 10701 EAST BLVD, CLEVELAND, OHIO 44106

Date | Checked By: MJM | Drawn By

Project Number: 541-12-113

Building Number: 1

Drawing Number: 1-2

Office of Construction and Facilities Management

Department of Veterans Affairs

VA FORM 08-6231

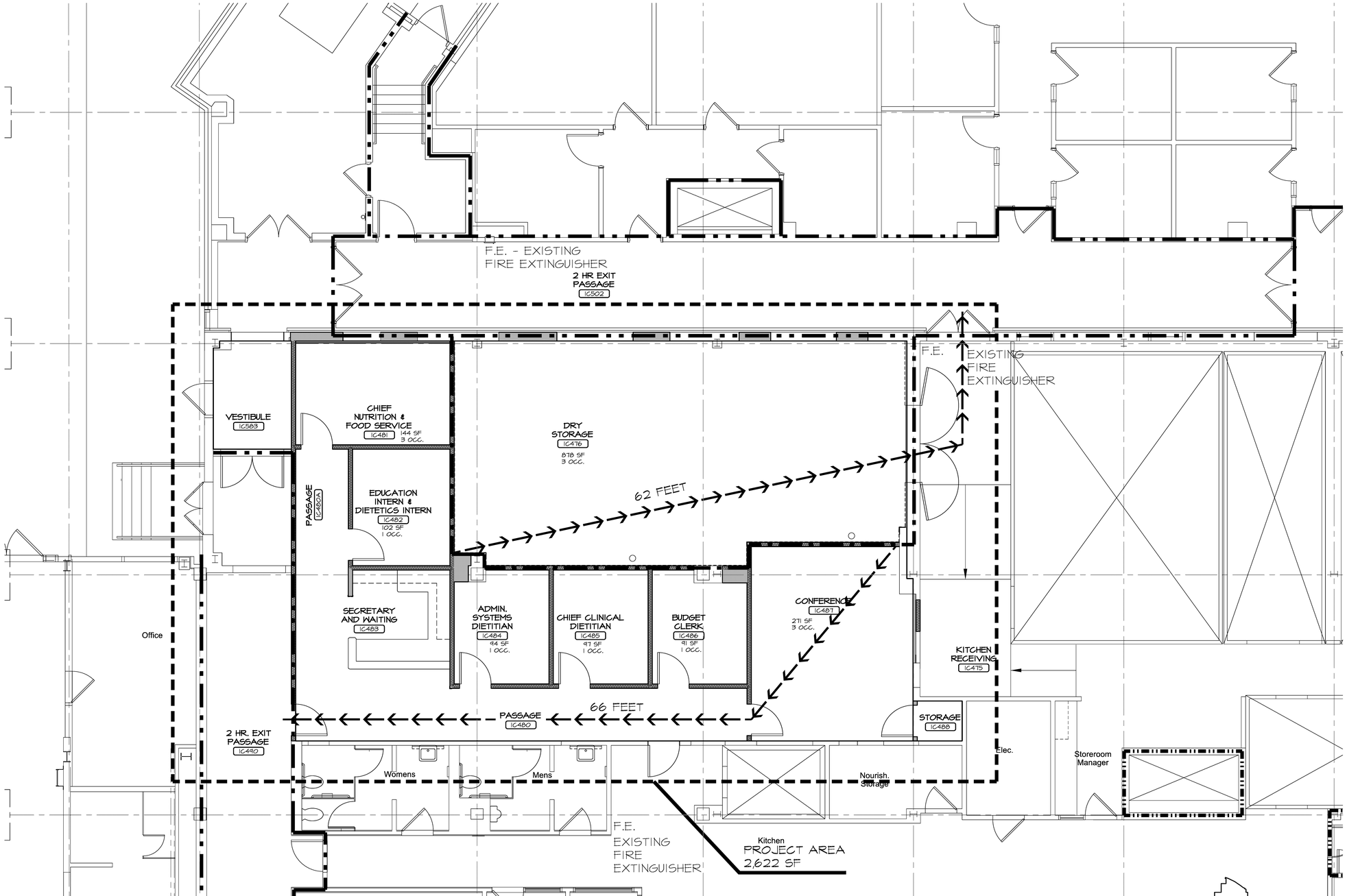

PARTIAL FIRST FLOOR LIFE SAFETY PLAN 1
1/8"=1'-0"
DRAWING NORTH

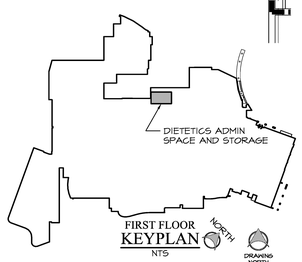

FIRST FLOOR
KEYPLAN
NTS
DRAWING NORTH

BUILDING CODE SUMMARY

BUILDING CODE:	2009 NFPA 101 LIFE SAFETY CODE
PROJECT AREA:	DIETETICS ADMIN SPACE AND STORAGE SHOPS: 2,622 SF
USE GROUP:	USE GROUP '1-2' (308.3)
OCCUPANCY:	BUSINESS AREA (NO CHANGE IN OCCUPANCY)
HEIGHT AND AREA LIMITATION:	UNLIMITED (TABLE 503) (NO CHANGE IN TOTAL BUILDING AREA)
CONSTRUCTION:	TYPE IB (TABLE 601) FULLY SPRINKLERED
FIRE RESISTANCE RATING FOR STRUCTURAL ELEMENTS:	**STRUCTURAL FRAME** INCLUDING COLUMNS, GIRDERS AND TRUSSES: 2 HOURS **FLOOR CONSTRUCTION** INCLUDING SUPPORTING BEAMS AND JOISTS: 2 HOURS **ROOF CONSTRUCTION** INCLUDING SUPPORTING BEAMS JOISTS: 1 HOUR **CORRIDOR FIRE RESISTANCE RATING** 0 HOURS (TABLE 1017.1)
CORRIDOR WALLS:	CONSTRUCTED AS SMOKE PARTITIONS TO LIMIT TRANSFER OF SMOKE (407.3 & 710.4)
SMOKE BARRIER:	REQUIRED 1 HR (408.6)
INTERIOR FINISH & TRIM:	EXIT ACCESS CORRIDORS AND OTHER EXITWAYS: CLASS B (TABLE 803.5) ROOMS AND ENCLOSED SPACES: CLASS B (TABLE 803.5)
FLOOR FINISH: INTERIOR	VERTICAL EXITS, EXIT PASSAGEWAY AND EXIT ACCESS CORRIDORS: CLASS II (804.4.1) ALL OTHER AREAS: COMPLY WITH THE DOC FFI "PILL TEXT" (804.4.1)
FIRE PROTECTION:	FIRE SUPPRESSION SYSTEM PER NFPA 13 USE GROUP 1 - REQUIRED (903.2.5 AND 903.3.1) FIRE ALARM AND AUTOMATIC DETECTION SYSTEMS USE GROUP 1 - REQUIRED (907.2.6)
FIRE EXTINGUISHERS:	MAX. 3,000 SF PER EXTINGUISHER MAX. TRAVEL DISTANCE 75' PER NFPA SECTION 10
LENGTH OF ACCESS TRAVEL:	200 FEET (TABLE 1016.1 NOTE C)
OCCUPANT LOAD:	OCCUPANT LOAD (TABLE(1004.1.1) BUISNESS AREAS: 100 SF/OCCUPANT 1,285/100 SF/OCC= 13 OCCUPANTS STORAGE AREAS: 300 GSF/OCCUPANT 878/300 GSF/OCC= 3 OCCUPANTS
SIZE OF DOORS:	32" MIN. CLEAR (1008.1.1) 41" MIN. CLEAR FOR MOVEMENT OF BEDS (N/A)
EXIT SIGNS:	PER 1011.1
EGRESS LIGHTING:	PER 1006.3 (EMERGENCY)
ACCESSIBILITY:	ALL PUBLIC AND PATIENT AREAS TO COMPLY WITH THE "AMERICANS WITH DISABILITIES ACT ACCESSIBLITY GUIDELINES" (ADAAG)
EXIT ACCESS DOORWAYS:	DIETETICS ADMIN. SPACE EXITS (1) REQUIRED (1015.1)
HAZARDOUS AREA DOORWAYS:	DRY STORAGE BY 1-HOUR FIRE BARRIER (NFPA 101 18.3.2.1)

LEGEND

FE	FIRE EXTINGUISHER
— — —	1 HR FIRE RATED CONST. EXTEND EXISTING WALLS TO DECK WHERE INDICATED AS REQ'D
— · — · —	2 HR FIRE RATED CONST. EXTEND EXISTING WALLS TO DECK WHERE INDICATED AS REQ'D
←←←	EGRESS ROUTE

NOTE: ALL PARTITIONS SHALL EXTEND TO UNDERSIDE OF STRUCTURAL DECK UNLESS UNLESS OTHERWISE NOTED

FULLY SPRINKLERED

FOR CONSTRUCTION

Revisions:	Date
FINAL CD SUBMISSION - FOR CONSTRUCTION	07-11-12

CONSULTANTS:

STATE OF OHIO
DAVID J. PUSTI
7906332
REGISTERED ARCHITECTS
David J. Pusti, License #7906332
Expiration Date 12/31/2013

ARCHITECT/ENGINEERS:

MAKOVICH & PUSTI ARCHITECTS, INC.
111 FRONT STREET BEREA, OHIO 44017
(440) 891-8919 p (440) 891-0861 f

FREDRICK, FREDRICK & HELLER ENGINEERS, INC.
572 EAST ROYALTON ROAD
BROADVIEW HTS., OHIO 44147
TEL. (440) 546-9696
FAX (440) 546-9698

Drawing Title	PARTIAL FIRST FLOOR LIFE SAFETY PLAN
Approved: Project Director	
Project Title	VAMC WADE PARK CLEVELAND DIETETICS ADMIN SPACE AND STORAGE
Location	10701 EAST BLVD, CLEVELAND, OHIO 44106
Date	
Checked By	MJM
Drawn By	
Project Number	541-12-113
Building Number	1
Drawing Number	1-3

Office of Construction and Facilities Management

Department of Veterans Affairs

VA FORM 08-6231

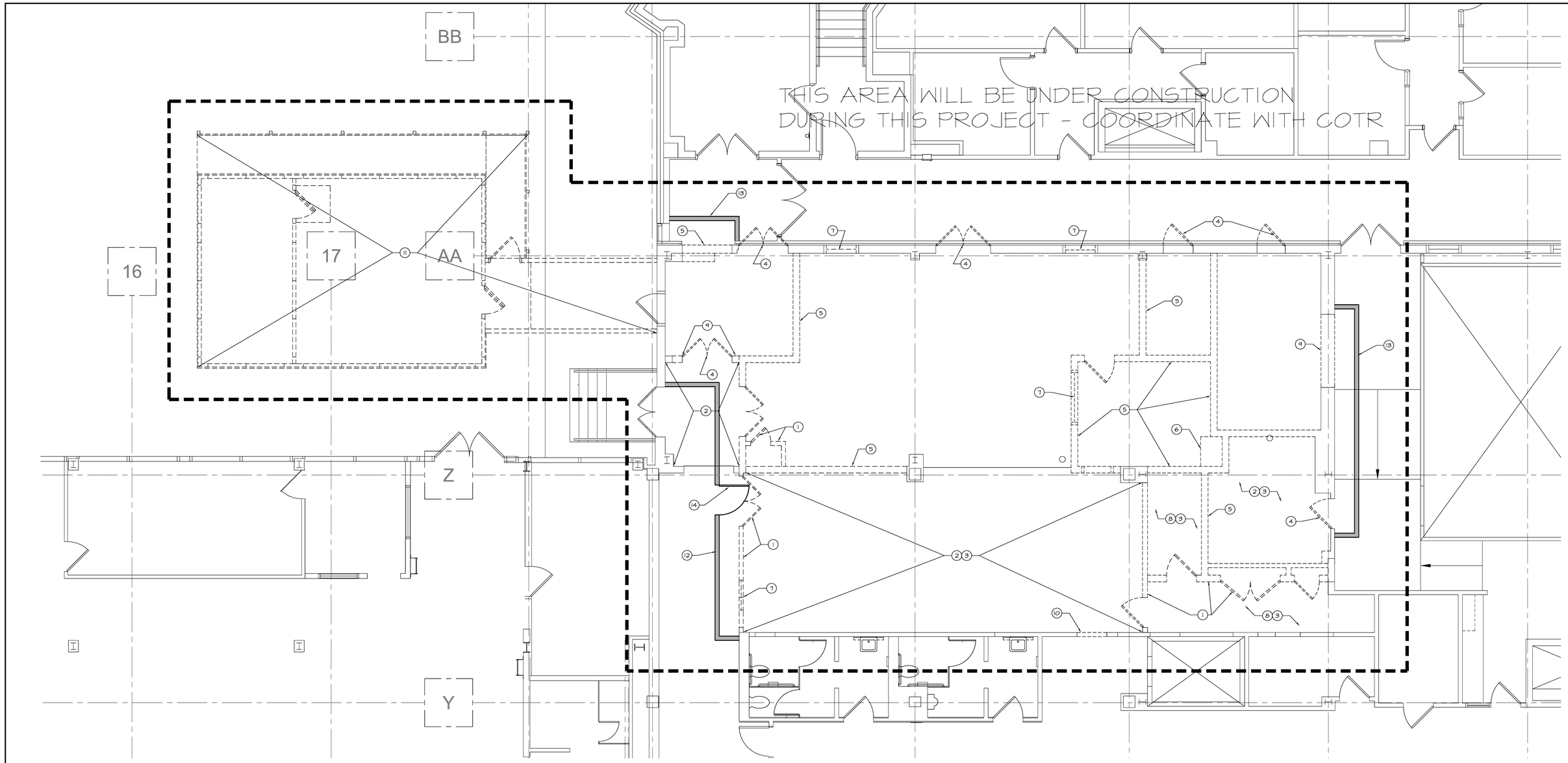

PARTIAL BASEMENT DEMOLITION PLAN

1/8"=1'-0"

DRAWING NORTH

GENERAL NOTES

1. COORDINATE DEMOLITION WITH ASBESTOS ABATEMENT CONTRACTOR.
2. COORDINATE ALL DEMOLITION WORK WITH OWNER.
3. REFER TO MECHANICAL & ELECTRICAL DRAWINGS FOR ADDITIONAL DEMOLITION REQUIREMENTS.
4. EXISTING FLOOR TO FLOOR HEIGHT: FIRST FLOOR TO SECOND FLOOR: 12'-0"
5. FIRST FLOOR AND SECOND FLOOR CONSTRUCTION: CONCRETE SLAB ON METAL DECK, BEAMS & JOISTS
6. RADIOLOGY PHASE 2 CONSTRUCTION TO THE NORTH OF THIS PROJECT WILL OCCUR AT THE SAME TIME AS THIS RENOVATION. COORDINATE WITH COTR. ACCESS TO DOCK AREA WILL BE LIMITED FROM MAGNOLIA AND DEBRIS REMOVAL SHALL BE COORDINATED WITH ADJACENT CONTRACTOR. EXISTING LOADING DOCK WILL BE DEMOLISHED UNDER RADIOLOGY PHASE 2 PROJECT.

DEMOLITION KEYNOTES

1. REMOVE ALL PARTITIONS, DOORS & FRAMES SHOWN DASHED.
2. REMOVE VCT FLOORING, AND WALL BASE
3. REMOVE LAY-IN CEILING TILES & SUSPENSION SYSTEM
4. REMOVE DOOR AND FRAME
5. REMOVE CONCRETE BLOCK WALL TO STRUCTURE ABOVE.
6. REMOVE MILLWORK
7. REMOVE EXISTING WINDOW
8. REMOVE QUARRY TILE FLOOR AND BASE
9. REMOVE CONCRETE BLOCK FOR NEW OPENING OR DOOR AND FRAME
10. CUT OPENING IN EXISTING GYPSUM BOARD PARTITION FOR NEW DOOR AND FRAME
11. REMOVE EXISTING DRY FOODS STORAGE UNIT. PATCH EXISTING CONCRETE DRIVE AND PATCH AT BUILDING CONNECTION AS REQUIRED.
12. TEMPORARY 2 HR. FIRE-RATED PARTITION TYPE 2r.
13. TEMPORARY 1 HR. FIRE-RATED PARTITION TYPE 1r.
14. TEMPORARY 1-1/2 HR. FIRE RATED 3'-0" X 7'-0" HOLLOW METAL DOOR AND FRAME W/ LOCKSET AND CLOSER.

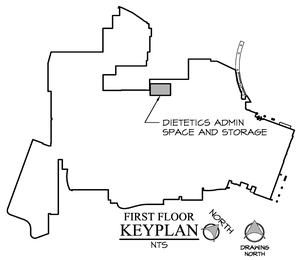

FOR CONSTRUCTION

FULLY SPRINKLERED

FINAL CD SUBMISSION - FOR CONSTRUCTION	07-11-12
Revisions:	Date

CONSULTANTS:

STATE OF OHIO — DAVID J. PUSTI 7906332 — REGISTERED ARCHITECT

David J. Pusti, License #7906332
Expiration Date 12/31/2013

ARCHITECT/ENGINEERS:

MAKOVICH & PUSTI ARCHITECTS, INC.
111 FRONT STREET BEREA, OHIO 44017
(440) 891-8910 p (440) 891-0086 f

FREDRICK, FREDRICK & HELLER ENGINEERS, INC.
672 EAST ROYALTON ROAD
BROADVIEW HTS., OHIO 44147
TEL: (440) 546-9898
FAX: (440) 546-9888

Drawing Title: PARTIAL FIRST FLOOR DEMOLITION PLAN	Project Title: VAMC WADE PARK CLEVELAND DIETETICS ADMIN SPACE AND STORAGE		Project Number: 541-12-113
			Building Number: 1
Approved: Project Director	Location: 10701 EAST BLVD, CLEVELAND, OHIO 44106		Drawing Number: 1-4
	Date	Checked By: MJM / Drawn By	

Office of Construction and Facilities Management

Department of Veterans Affairs

VA FORM 08-6231

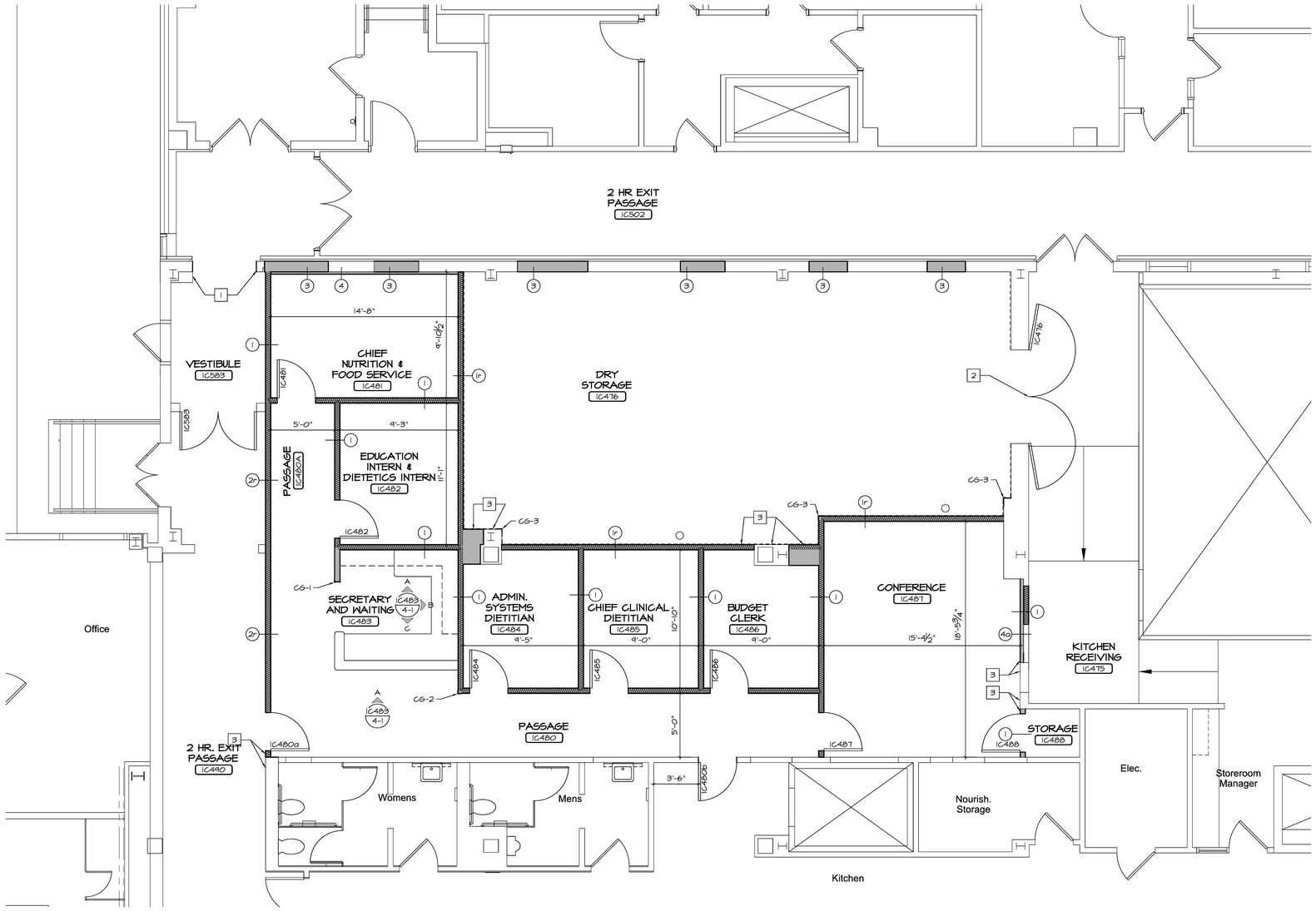

PARTIAL FIRST FLOOR PLAN
¼"=1'-0"

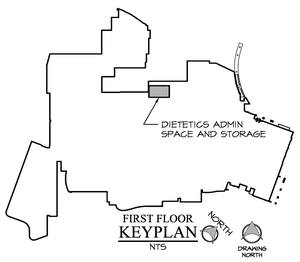

FIRST FLOOR KEYPLAN
NTS

FLOOR PLAN KEYNOTES

1. PATCH OPENING WITH GYPSUM BOARD ON METAL FURRING
2. GENERAL CONTRACTOR IS TO FIELD VERIFY WALL CONSTRUCTION AND COORDINATE LOCATION OF DOORS WITH CROSS BRACING
3. ALIGN
4. OWNER IS RESPONSIBLE FOR REMOVING EQUIPMENT WITHIN LOADING DOCK AFFECTED BY THE SCOPE OF THIS PROJECT.

GENERAL NOTES

1. FIELD VERIFY ALL DIMENSIONS & CONDITIONS PRIOR TO COMMENCEMENT OF WORK. DISCREPANCIES BETWEEN ACTUAL DIMENSIONS & CONDITIONS AND DRAWINGS SHALL BE BROUGHT TO ARCHITECTS ATTENTION FOR CLARIFICATION.
2. PROVIDE IN-WALL REINFORCEMENT FOR ATTACHMENT OF MILLWORK, CASEWORK ACCESSORIES & SPECIALTIES.
3. REFER TO DRAWING 1-1 FOR WALL TYPES & DOOR SCHEDULE.
4. THE DEMOLITION OF EXISTING PARTITIONS WILL RESULT IN "CHANNELS" IN THE EXISTING FLOOR TOPPING SLAB. ALL CHANNELS SHALL BE FILLED AND THE PROJECT AREA (APPROX. 2,622 SF) SHALL BE LEVELED WITH HYDRAULIC CEMENT UNDERLAYMENT.
5. WALL PROTECTION DESIGNATIONS:
   1. CG-1: CORNER GUARD TYPE CG-1.
   2. CG-2: CORNER GUARD TYPE CG-2.
   3. CG-3 CORNER GUARD TYPE CG-3
   4. REFER TO COLOR SCHEDULE DRAWINGS FOR EXTENT AND LOCATION OF SHEET WALL PROTECTION
6. ALL STRUCTURAL STEEL (BEAMS, JOISTS, DECKING, COLUMNS, BRACING) EXPOSED IN THE CONSTRUCTION PROCESS SHALL BE FIREPROOFED.
7. REFER TO DRAWING 4-1 FOR ROOF OPENING DETAILS. REFER TO DRAWING 1-H6 FOR ROOF OPENING LOCATIONS.

FOR CONSTRUCTION

FULLY SPRINKLERED

Revisions:	Date
FINAL CD SUBMISSION - FOR CONSTRUCTION	07-11-12

CONSULTANTS:

STATE OF OHIO
DAVID J. PUSTI
7906332
REGISTERED ARCHITECTS
David J. Pusti, License #7906332
Expiration Date 12/31/2013

ARCHITECT/ENGINEERS:

MAKOVICH & PUSTI ARCHITECTS, INC.
111 FRONT STREET BEREA, OHIO 44017
(440) 891-0910 p (440) 891-0086 f

FREDRICK, FREDRICK & HELLER ENGINEERS, INC.
672 EAST ROYALTON ROAD
BROADVIEW HTS., OHIO 44147
TEL. (440) 546-9000
FAX (440) 546-9000

Drawing Title	PARTIAL FIRST FLOOR PLAN
Approved: Project Director	
Project Title	VAMC WADE PARK CLEVELAND DIETETICS ADMIN SPACE AND STORAGE
Location	10701 EAST BLVD, CLEVELAND, OHIO 44106
Date	
Checked By	MJM
Drawn By	
Project Number	541-12-113
Building Number	1
Drawing Number	2-1

Office of Construction and Facilities Management

Department of Veterans Affairs

VA FORM 08-6231

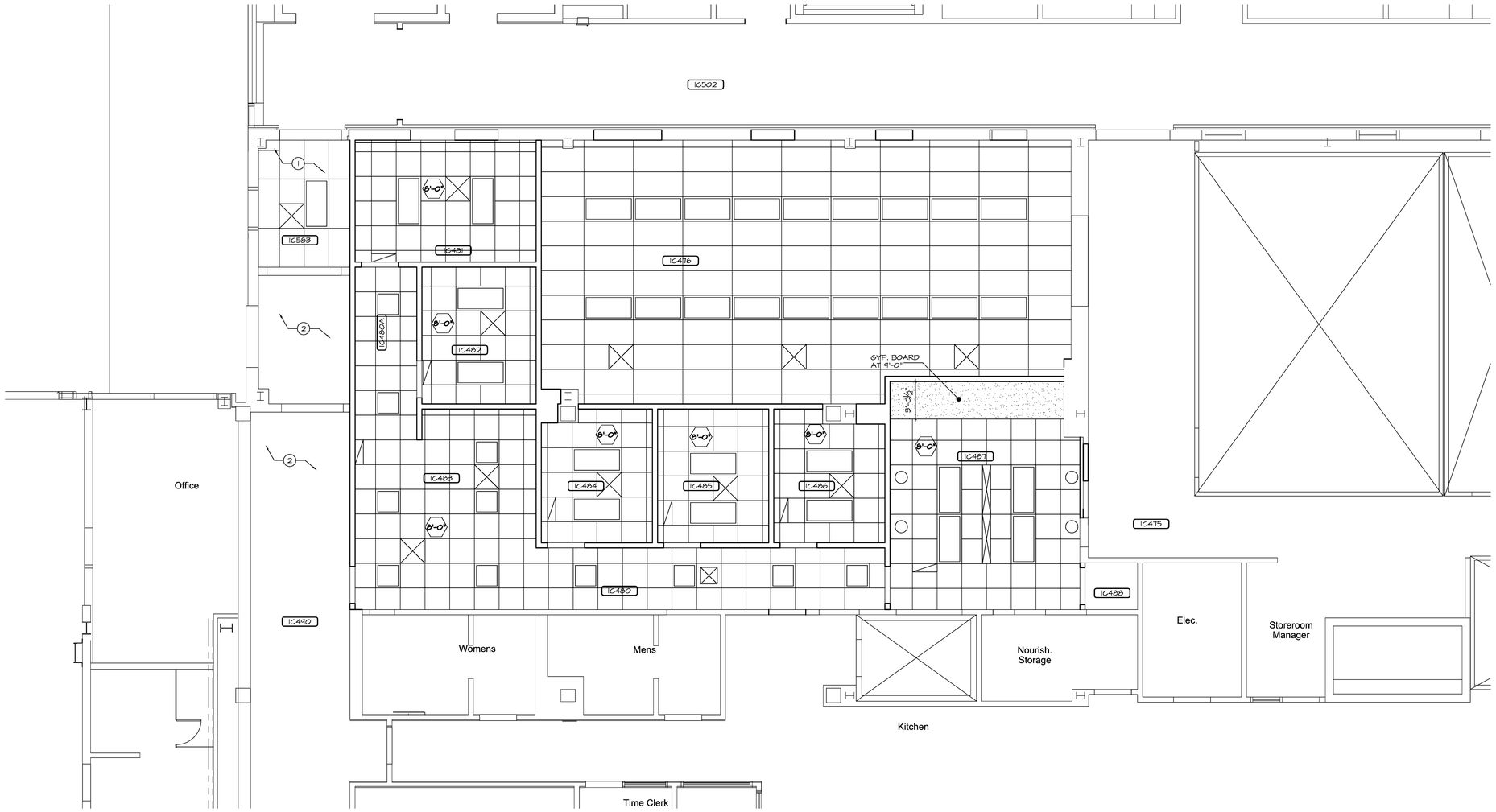

PARTIAL FIRST FLOOR RELECTED CEILING PLAN

1/8"=1'-0"

DRAWING NORTH

NOTES CODED TO CEILING PLAN

1. LOCATED NEW CEILING AS HIGH AS POSSIBLE
2. PATCH ACOUSTIC CEILING TILES AND GRID TO MATCH EXISTING.

CEILING LEGEND

- 2'-0"x4'-0" SUSPENDED ACOUSTICAL LAY-IN CEILING
- 2'-0"x2'-0" SUSPENDED ACOUSTICAL LAY-IN CEILING
- 2'-0"x4'-0" FLUORESCENT LIGHT FIXTURE. REFER TO ELEC DWGS
- 2'-0"x2'-0" FLUORESCENT LIGHT FIXTURE. REFER TO ELEC DWGS
- SUPPLY AIR DIFFUSER. REFER TO MECHANICAL DRAWINGS
- SUPPLY AIR DIFFUSER. REFER TO MECHANICAL DRAWINGS
- GYPSUM BOARD CEILING OR SOFFIT
- 9'-0" FINISHED CEILING HEIGHT
- DOWNLIGHT. REFER TO ELECTRICAL DRAWINGS
- RETURN AIR DIFFUSER. REFER TO MECHANICAL DRAWINGS

GENERAL NOTES

1. ALL CEILING HEIGHTS SHALL BE 9'-0" AFF UNLESS OTHERWISE NOTED.

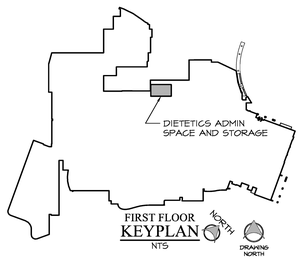

FOR CONSTRUCTION

FULLY SPRINKLERED

FINAL SUBMISSION FOR CONSTRUCTION	07-11-12
Revisions:	Date

CONSULTANTS:

STATE OF OHIO — DAVID J. PUSTI 7906332 — REGISTERED ARCHITECTS

David J. Pusti, License #7906332
Expiration Date 12/31/2013

ARCHITECT/ENGINEERS:

MAKOVICH & PUSTI ARCHITECTS, INC.
111 FRONT STREET BEREA, OHIO 44017
(440) 891-8910 p (440) 891-0086 f

FREDRICK, FREDRICK & HELLER ENGINEERS, INC.
672 EAST ROYALTON ROAD
BROADVIEW HTS., OHIO 44147
TEL. (440) 546-9000
FAX. (440) 546-8000

Drawing Title: PARTIAL FIRST FLOOR REFLECTED CEILING PLAN

Approved: Project Director

Project Title: VAMC WADE PARK CLEVELAND DIETETICS ADMIN SPACE AND STORAGE

Location: 10701 EAST BLVD, CLEVELAND, OHIO 44106

Date	Checked By	Drawn By
	MJM	

Project Number: 541-12-113

Building Number:

Drawing Number: 3-1

Office of Construction and Facilities Management

Department of Veterans Affairs

VA FORM 08-6231

OPENING/DOOR SCHEDULE

OPENING NUMBER	OPENING SIZE WIDTH	OPENING SIZE HGT	DOOR MAT	DOOR THK	DOOR TYPE	DOOR GL	RATED	FRAME MAT	FRAME ELEV	FRAME TYPE	FRAME WIDTH	DETAILS HEAD	DETAILS JAMB	DETAILS SILL	REMARKS
1C476	3'-0"	7'-0"	HM	1-3/4"	A	-	45	HM	A	-	•	3	4	-	* FIELD VERIFY
1C480a	3'-0"	7'-0"	SGW	1-3/4"	C	FR56	90	HM	A	-	5-7/8"	1	2	-	-
1C480b	3'-0"	7'-0"	HM	1-3/4"	A	-	-	HM	A	-	5-7/8"	1	2	-	-
1C481	3'-0"	7'-0"	SGW	1-3/4"	A	-	-	HM	A	-	5-7/8"	1	2	-	-
1C482	3'-0"	7'-0"	SGW	1-3/4"	A	-	-	HM	A	-	5-7/8"	1	2	-	-
1C484	3'-0"	7'-0"	SGW	1-3/4"	A	-	-	HM	A	-	5-7/8"	1	2	-	-
1C485	3'-0"	7'-0"	SGW	1-3/4"	A	-	-	HM	A	-	5-7/8"	1	2	-	-
1C486	3'-0"	7'-0"	SGW	1-3/4"	A	-	-	HM	A	-	5-7/8"	1	2	-	-
1C487	3'-0"	7'-0"	SGW	1-3/4"	B	TEMP	-	HM	A	-	5-7/8"	1	2	-	-
1C488	3'-0"	7'-0"	SGW	1-3/4"	A	-	-	HM	A	-	5-7/8"	1	2	-	-
1C490	3'-0"	7'-0"	HM	1-3/4"	C	FR56	90	HM	A	-	10-3/4"	3	4	-	-

HARDWARE SCHEDULE

OPENING NUMBER	FUNCTION	POWER TRANSFER HINGE	BUTT HINGES	ELECTRIC LOCKSET	LOCKSET	KICK PLATE	CLOSER	WALL STOP	EXIT DEVICE	ASTRAGAL	AUTOMATIC FLUSH BOLTS	ELECTRO-MAGNETIC HOLD-OPEN	COORDINATOR	REMARKS
1C476	F07	1	5	1		2	1	1		1	1	1		
1C480a	F04	1	2	1		1	1	1						
1C480b	F04	1	2	1		1	1							
1C481	F04	1	2	1		1								
1C482	F04	1	2	1		1		1						
1C484	F04	1	2	1		1		1						
1C485	F04	1	2	1		1		1						
1C486	F04	1	2	1		1		1						
1C487	F04	1	2	1		1		1						
1C488	F07		3		1			1						
1C490	F04		6		1	2	1		1	1	1	1		

SCHEDULE LEGEND

OPENING/DOOR	
SGW	SOLID CORE WOOD
HM	HOLLOW METAL
TEMP	¼" TEMPERED GLASS
FR56	FIRE-RATED SAFETY GLASS

NOTES:
1. COORDINATE POWER TRANSFER HIGES AND ELECTRIC LOCKSETS WITH ELECTRICAL DRAWINGS.

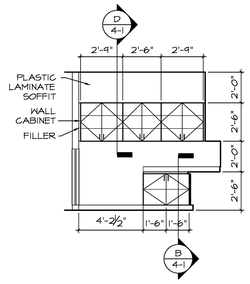

SECRETARY AND WAITING 1C483-A

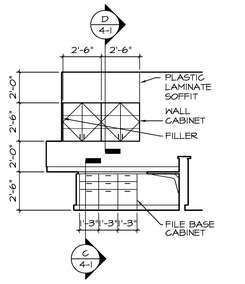

SECRETARY AND WAITING 1C483-B

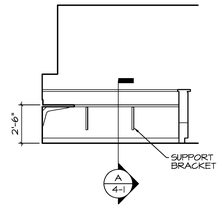

SECRETARY AND WAITING 1C483-C

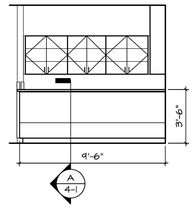

PASSAGE 1C480A-A

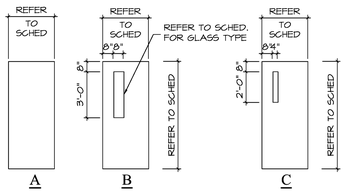

DOOR TYPES
SCALE: NTS

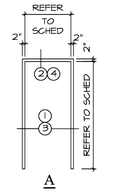

FRAME TYPES
SCALE: NTS

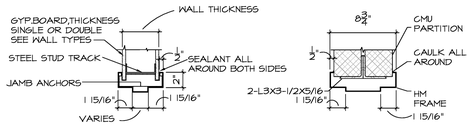

1 - HEAD DETAIL

3 - HEAD DETAIL

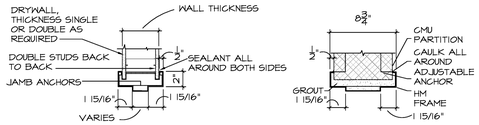

2 - JAMB DETAIL

4 - JAMB DETAIL

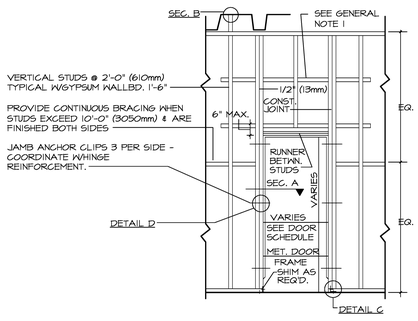

ELEVATION AT DOOR FRAME

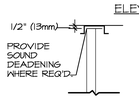

SECTION B

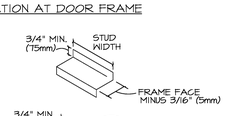

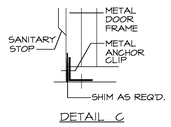

DETAIL C

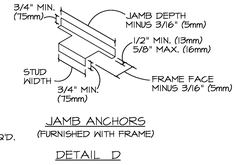

JAMB ANCHORS
(FURNISHED WITH FRAME)

DETAIL D

GENERAL NOTES:

OMIT BRACE WHEN "D" DIMENSION IS LESS THAN 2'-0" (610mm) OR 16" (400mm) FOR PLASTER PARTITION.

PARTITION FRAMING AT DOORS
SCALE: NTS

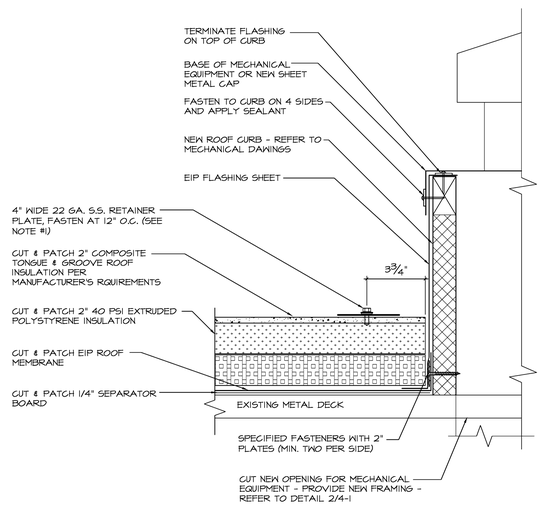

NOTES:
1. RETAINER PLATE TO BE INSTALLED AT PERIMETER OF ROOF ACCESSORIES WITH SIDES GREATER THAN 4' IN LENGTH AND/OR AT PATCHED COMPOSITE INSULATION.
2. ALL MODIFICATIONS TO EXISTING INVERTED EIP ROOF SYSTEM MUST BE MADE BY ORIGINAL INSTALLATION CONTRACTOR TO MAINTAIN EXISTING WARANTY.

1/4-1 ROOF CURB
3"=1'-0"

ROOF PENETRATION GENERAL NOTES:

1. THE EXISTING ETHYLENE-INTERPOLYMER (EIP), PROTECTED ROOF MEMBRANE ASSEMBLY (PRMA) ROOF IS WARRANTED BY THE MANUFACTURER AND INSTALLING CONTRACTOR. PRESERVE EXISTING ROOFING SYSTEM WARRANTY BY PATCHING HOLES AND OPENINGS USING APPROVED MATERIALS AND METHODS. NOTIFY WARRANTORS BEFORE PROCEEDING WITH ROOF PATCHING. AT COMPLETION OF ROOF PATCHING, NOTIFY WARRANTORS TO OBTAIN DOCUMENTATION VERIFYING THAT EXISTING ROOFING SYSTEM HAS BEEN INSPECTED AND WARRANTY REMAINS IN EFFECT. SUBMIT DOCUMENTATION AT PROJECT CLOSEOUT.
2. PROJECT SCOPE LINE IS INDICATED FOR GENERAL INTENT ONLY. CONTRACTOR SHALL COMPLETE ALL WORK REGARDLESS IF IT IS LOCATED OUTSIDE OF PROJECT SCOPE AREA AS INDICATED ON ANY DRAWING. REFER TO MECHANICAL DRAWING 1-H6 FOR OPENING LOCATIONS.
3. WEATHER LIMITATIONS: PROCEED WITH INSTALLATION ONLY WHEN EXISTING AND FORECASTED WEATHER CONDITIONS PERMIT ROOFING SYSTEM TO BE INSTALLED ACCORDING TO MANUFACTURER'S WRITTEN INSTRUCTIONS AND WARRANTY REQUIREMENTS. DO NOT APPLY ROOFING MEMBRANE DURING INCLEMENT OR OR WINDY WEATHER WITH AMBIENT TEMPERATURES BELOW 40 DEGREES AND FALLING. DURING COLD WEATHER CONDITIONS, THE TEMPERATURE/HUMIDITY RATIO MUST BE AT LEAST 5 DEGREES F. ABOVE THE DEW POINT OF AMBIENT AIR AND RISING. PROTECT ROOF DECK, INSULATION AND INTERIOR SPACES FROM MOISTURE AT THE END OF THE DAY'S WORK OR WHEN THE WEATHER IS THREATENING.

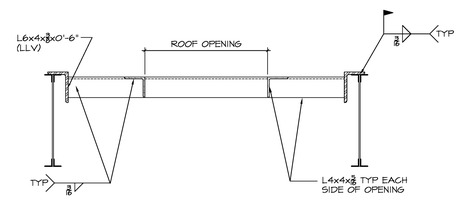

2/4-1 ROOF OPENING
1"=1'-0"

COVER ALL SURFACES WITH PLASTIC LAMINATE UNLESS NOTED OTHERWISE

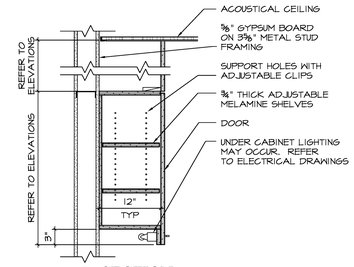

D/4-1 SECTION
1"=1'-0"

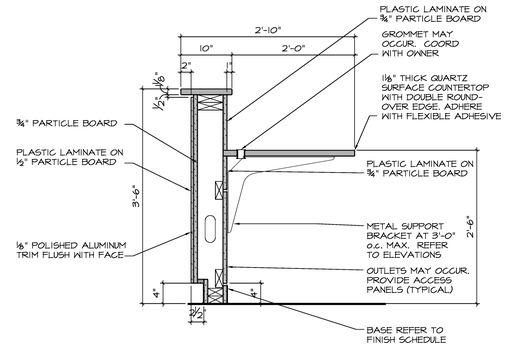

A/4-1 SECTION
1"=1'-0"

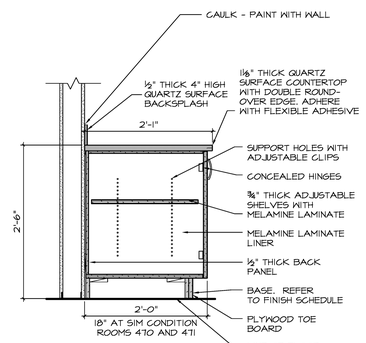

B/4-1 SECTION
1"=1'-0"

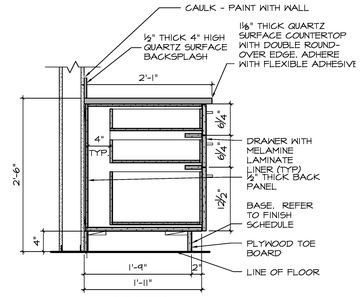

C/4-1 SECTION
1"=1'-0"

FOR CONSTRUCTION

FULLY SPRINKLERED

Revisions:	Date
FINAL CD SUBMISSION - FOR CONSTRUCTION	07-11-12

CONSULTANTS:

STATE OF OHIO — DAVID J. PUSTI 7906332 — REGISTERED ARCHITECT
David J. Pusti, License #7906332
Expiration Date 12/31/2013

ARCHITECT/ENGINEERS:

MAKOVICH & PUSTI ARCHITECTS, INC.
111 FRONT STREET BEREA, OHIO 44017
(440) 891-8910 p (440) 891-0086 f

FREDRICK, FREDRICK & HELLER ENGINEERS, INC.
672 EAST ROYALTON ROAD
BROADVIEW HTS., OHIO 44147
TEL. (440) 546-9898
FAX. (440) 546-8880

Drawing Title: INTERIOR ELEVATIONS, SECTIONS, AND DOOR AND HARDWARE SCHEDULE AND DETAILS

Approved: Project Director

Project Title: VAMC WADE PARK CLEVELAND DIETETICS ADMIN SPACE AND STORAGE

Location: 10701 EAST BLVD, CLEVELAND, OHIO 44106

Date | Checked By: MJM | Drawn By

Project Number: 541-12-113

Building Number: 1

Drawing Number: 4-1

Office of Construction and Facilities Management

Department of Veterans Affairs

VA FORM 08-6231

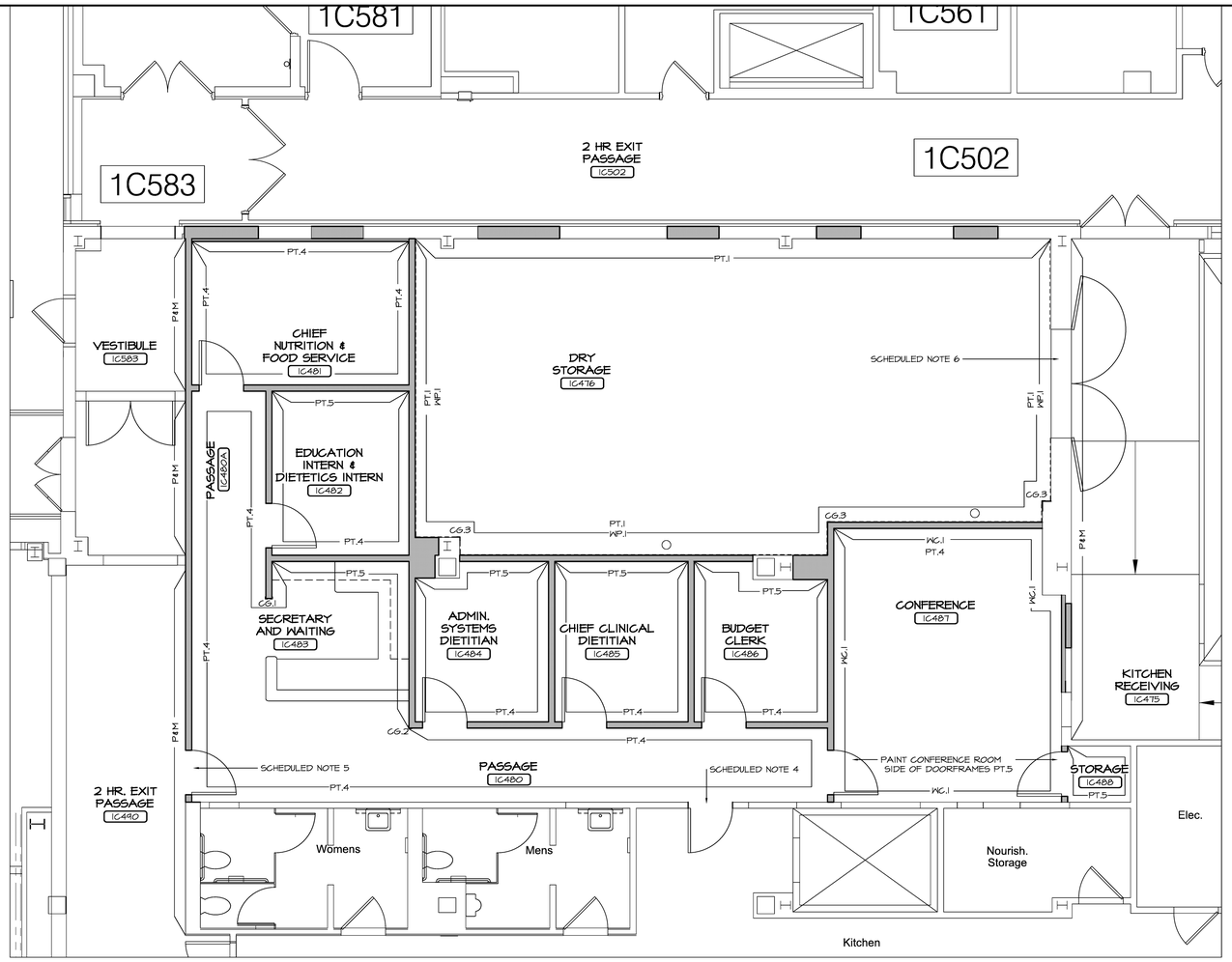

PARTIAL FIRST FLOOR FINISH PLAN
¼"=1'-0"

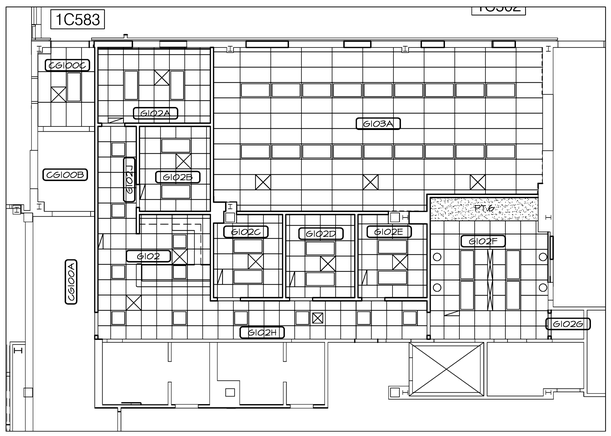

PARTIAL FIRST FLOOR FINISH CEILING PLAN
⅛"=1'-0"

FINISH & COLOR SCHEDULE

RM. NO.	ROOM NAME	FLOOR	BASE	WALLS NORTH	WALLS SOUTH	WALLS EAST	WALLS WEST	CEILING	MILLWORK CABINETS	MILLWORK COUNTERS	SCHEDULED NOTES
1C475	KITCHEN RECEIVING	-	P&M	-	-	-	P&M	-	-	-	* NOTE 6
1C476	DRY STORAGE	SV.1	SVB.1	PT.1 / WP.1	PT.1 / WP.1	PT.1 / WP.1	PT.1 / WP.1	ACT.2	-	-	* NOTES 1 & 6
1C480	PASSAGE	CPT.1	RB.1	PT.4	PT.4	PT.4	PT.4	ACT.1	-	-	* NOTES 4 & 5
1C480A	PASAGE	CPT.1	RB.1	PT.4	PT.4	PT.4	PT.4	ACT.1	-	-	-
1C483	SECRETARY AND WAITING	CPT.1	RB.1	PT.5	PT.4	PT.5	PT.4	ACT.1	PL.1	QS.1	* NOTE 1
1C481	CHIEF NUTRITION & FOOD SERVICE	CPT.1	RB.1	PT.5	PT.4	PT.4	PT.4	ACT.1	-	-	* NOTE 1
1C482	EDUCATION INTERN & DIETETICS INTERN	CPT.1	RB.1	PT.5	PT.4	PT.4	PT.4	ACT.1	-	-	* NOTE 1
1C484	ADMIN. SYSTEMS DIETITIAN	CPT.1	RB.1	PT.5	PT.4	PT.4	PT.4	ACT.1	-	-	* NOTE 1
1C485	CHIEF CLINICAL DIETITIAN	CPT.1	RB.1	PT.5	PT.4	PT.4	PT.4	ACT.1	-	-	* NOTE 1
1C486	BUDGET CLERK	CPT.1	RB.1	PT.5	PT.4	PT.4	PT.4	ACT.1	-	-	* NOTE 1
1C487	CONFERENCE	CPT.1	RB.2	WC.1	WC.1	WC.1	WC.1	PT.85 / ACT.1	-	-	* NOTE 2
1C488	STORAGE	CPT.1	RB.1	PT.4	PT.4	PT.4	PT.4	PT.6	-	-	-
1C490	CORRIDOR	-	P&M*	-	-	P&M*	-	P&M	-	-	* NOTES 3 & 5
1C503	VESTIBULE	-	P&M*	-	-	P&M*	-	ACT.2	-	-	* NOTE 3

* ASSUME NORTH WALL TO BE "DRAWING NORTH"

FINISH & COLOR SCHEDULE KEY:

FLOOR

CPT.1 CARPET TILE - LEES, PATTERN: GT129 BRANCHING OUT, COLOR: 859 SHELTER - SIZE: 24" X 24" - INSTALLATION METHOD: ASHLAR WITH 8" OFFSET

SV.1 SHEET VINYL - ALTRO, PATTERN: MAXIS MXD25207, COLOR: MERIT, WIDTH: 6'-0", HEAT WELDED SEAMS WITH MATCHING WELDING ROD COLOR

BASE

SVB.1 SHEET VINYL BASE - ALTRO, PATTERN: MAXIS MXD25207, COLOR: MERIT WIDTH: 6'-0", FLASH COVED TO 6" H., WITH MATCHING WELDING ROD COLOR

RB.1 RUBBER BASE - JOHNSONITE, PERCEPTIONS RECESSED WALL BASE RVDC-150, COLOR: WETLANDS - SIZE: 4-1/4" HIGH

WALLS

PT.1 PAINT - SHERWIN WILLIAMS, SW7723 COLONY BUFF - SEMI-GLOSS FINISH

PT.2 PAINT - SHERWIN WILLIAMS, COLOR TO MATCH EXISTING BRICK - SEMI-GLOSS FINISH

PT.3 PAINT - NOT USED

PT.4 PAINT - SHERWIN WILLIAMS, SW6142 MACADAMIA - EGGSHELL FINISH

PT.5 PAINT - SHERWIN WILLIAMS, SW7546 PRAIRIE GRASS - EGGSHELL FINISH

VWC.1 VINYL WALLCOVERING - VERSA, SAKI A95-112 COLOR: ASPEN - 52/54" W. TYPE II, REVERSE HANG/RANDOM MATCH

WP.1 WALL PROTECTION - AGROVYN, COLOR 310 YOSEMITE SAND

CEILING

ACT.1 ACOUSTIC CEILING TILE - ARMSTRONG, CIRRUS 584 24"x24" BEVELED TEGULAR EDGE AND PRELUDE 15/16" EXPOSED TEE SYSTEM - COLOR: WHITE.

ACT.2 ACOUSTIC CEILING TILE - ARMSTRONG, CIRRUS 33 24"x48" SQUARE LAY-IN AND PRELUDE 15/16" EXPOSED TEE SYSTEM - COLOR: WHITE.

PT.6 PAINT - SHERWIN WILLIAMS, SW7006 EXTRA WHITE - FLAT FINISH

CABINETS

PL.1 PLASTIC LAMINATE - FORMICA, 7812-SP MDF SOLIDZ - SCULPTED FINISH - MATTE FINISH

SQ.1 SYNTHETIC QUARTZ - CAMBRIA, COLOR: 1730 ARAGON

SCHEDULED NOTES

1. REFER TO WALL FINISH PLAN THIS SHEET FOR EXTENTS OF WALL FINISHES.
2. REFER TO CEILING & SOFFIT FINISH PLAN ON THIS SHEET FOR EXTENTS OF SOFFIT FINISHES.
3. PATCH EXISTING FLOORING AND 24" X 48" LAY-IN CEILING AS NEEDED, PATCH & MATCH BASE AT NEW GB LOCATIONS. FINISH FULL EXTENT OF WALL TO MATCH EXISTING.
4. PAINT HM DOOR 102Hb & FRAME TO MATCH WALL COLOR PT.4 ON PASSAGE SIDE, AND EXISTING WALL PAINT COLOR ON KITCHEN SIDE.
5. PAINT HM DOOR FRAME 102Ha TO MATCH WALL COLOR PT.4 ON PASSAGE SIDE, AND EXISTING WALL PAINT COLOR ON CORRIDOR SIDE.
6. PAINT HM DOOR 103a & FRAME TO MATCH WALL COLOR PT.1 ON DRY STORAGE SIDE, AND EXISTING WALL PAINT COLOR ON KITCHEN RECEIVING SIDE.

GENERAL NOTES

A. REFER TO THE WALL FINISH KEY FOR ALL PAINT COLOR REFERENCE DEFINITIONS.

B. VERSA WALLCOVERING IS DISTRIBUTED BY DL COUCH 800-433-0740

C. CORNER GUARDS:
CG.1, CG.2 AND CG.3 - STAINLESS STEEL

D. ALL INTERIOR HOLLOW METAL DOORS AND DOOR FRAMES ARE TO RECEIVE TWO (2) COATS OF PAINT PER SPECIFICATIONS. COLOR IS TO MATCH THE WALL. NOTE: IF METAL TRIM IS NOT FACTORY PRIMED, THEN CONTRACTOR SHALL PRIME WITH BENJAMIN MOORE 024 FRESH START PRIMER.

E. STAIN DOORS PER SPECIFICATIONS IN THE FOLLOWING COLORS:
RED OAK DOORS: TO MATCH VA STANDARD COLOR AND FINISH

F. MATCH ADJOINING OR EXISTING SIMILAR SURFACES COLORS, TEXTURES OR PATTERNS WHERE DISTURBED OR DAMAGED BY ALTERATIONS OR NEW WORK WHEN NOT SCHEDULED.

G. WHERE FIN TUBE COVERS, CONVECTORS, METAL ACCESS DOORS, PANELS, COVERPLATES OR OTHER MISC. METALS OCCUR WITHIN A WALL, PAINT THEM TO MATCH THE COLOR OF THE WALL.

H. IT IS THE RESPONSIBILITY OF THE CONTRACTOR TO PREPARE WALLS FOR THE INSTALLATION OF WALLCOVERING AND PAINT. MATERIAL INSTALLED PER MANUFACTURER SPECIFICATIONS.

I. ALL PAINTED INTERIOR DRYWALL PARTITIONS ARE TO RECEIVE ONE (1) COAT OF DRYWALL PRIMER AND TWO (2) COATS OF EGGSHELL WALL LATEX PAINT PER SPECIFICATIONS.

J. ALL DRYWALL SOFFITS ARE TO RECEIVE ONE (1) COAT OF DRYWALL PRIMER AND TWO (2) COATS OF EGGSHELL WALL LATEX PAINT PER SPECIFICATIONS.

K. IT IS THE RESPONSIBILITY OF THE CONTRACTOR TO PREPARE FLOOR FOR INSTALLATION OF VINYL FLOORING PRODUCTS INCLUDING ALL MANUFACTURER RECOMMENDED TESTING OF THE CONCRETE. MATERIAL SHALL BE INSTALLED PER MANUFACTURER SPECIFICATIONS.

L. WHERE THERE IS A TRANSITION IN FLOORING MATERIAL, PROVIDE THE APPROPRIATE SCHLUTER TRIM PER SPECIFICATIONS.

M. ALL SHEET VINYL (SV) FLOORING IS FLASH COVED TO FORM AN INTEGRAL BASE. (REFER TO BASE KEY FOR HEIGHT.)

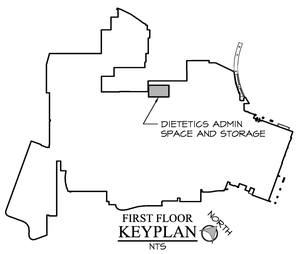

FIRST FLOOR KEYPLAN
NTS

FOR CONSTRUCTION

FULLY SPRINKLERED

FINAL CD SUBMISSION - FOR CONSTUCTION	07-11-12
Revisions:	Date

CONSULTANTS:

STATE OF OHIO — DAVID J. PUSTI 7906332 — REGISTERED ARCHITECTS

David J. Pusti, License #7906332
Expiration Date 12/31/2013

ARCHITECT/ENGINEERS:

MAKOVICH & PUSTI ARCHITECTS, INC.
111 FRONT STREET BEREA, OHIO 44017
(440) 891-8910 p (440) 891-8086 f

FREDRICK, FREDRICK & HELLER ENGINEERS, INC.
672 EAST ROYALTON ROAD
BROADVIEW HTS., OHIO 44147
TEL (440) 546-9000
FAX (440) 546-0000

Drawing Title: PARTIAL BASEMENT FLOOR FINISH PLAN AND FINISH SCHEDULE	Project Title: VAMC WADE PARK CLEVELAND DIETETICS ADMIN SPACE AND STORAGE	Project Number: 541-12-113	Office of Construction and Facilities Management
Approved: Project Director	Location: 10701 EAST BLVD, CLEVELAND, OHIO 44106	Building Number: 1	
	Date / Checked By: MJM / Drawn By	Drawing Number: 5-1	Department of Veterans Affairs

VA FORM 08-6231

FIRE SUPPRESSION GENERAL NOTES:

A. LOCATIONS AND ROUTING OF EXISTING PIPING, DUCTWORK AND EQUIPMENT IS PRESUMED FROM EXISTING DRAWINGS. MECHANICAL CONTRACTOR SHALL FIELD VERIFY ALL PRIOR TO COMMENCEMENT OF CONSTRUCTION. NOTIFY ENGINEER OF ANY CONDITIONS WHICH WILL NOT PERMIT THE WORK TO BE PERFORMED AS INDICATED ON THESE DRAWINGS.

B. COORDINATE ALL SHUT-DOWNS OF EXISTING SYSTEMS WITH OWNER A MINIMUM OF TEN WORKING DAYS IN ADVANCE.

C. PRIOR TO INSTALLATION, VERIFY PRECISE LOCATION OF NEW WALL MOUNTED DEVICES WITH OWNER AND ARCHITECT. REFER TO ARCHITECTURAL REFLECTED CEILING PLAN FOR PRECISE LOCATION OF CEILING MOUNTED DEVICES.

D. PROVIDE ADEQUATE SERVICE CLEARANCE FOR ALL EQUIPMENT. REFER TO INSTRUCTIONS FROM THE EQUIPMENT MANUFACTURER.

E. NEW PIPING SHALL NOT BE ROUTED ABOVE ELECTRICAL PANELS. REFER TO ELECTRICAL DRAWINGS FOR LOCATION OF PANELS.

F. THE FIRE SUPPRESSION CONTRACTOR SHALL PROVIDE DETAILED DESIGN OF THE SPRINKLER SYSTEM. REFER TO SPECIFICATIONS.

G. UNLESS OTHERWISE NOTED NEW SPRINKLERS SHALL BE AS FOLLOWS:
G.1. AREAS WITH CEILINGS: RECESSED CONCEALED STYLE WITH COVER PLATES.
G.2. EXPOSED STRUCTURE: UPRIGHT OR PENDENT TYPE.

H. ALL SPRINKLERS FURNISHED AS PART OF THIS PROJECT SHALL HAVE COVER PLATES WITH THE SAME SHAPE AND SIZE. COLOR SHALL BE SELECTED BY ARCHITECT.

I. THE FIRE PROTECTION SYSTEM IS PERFORMANCE SPECIFIED. ALL SPRINKLER PIPE SIZES SHALL BE DETERMINED BY FIRE PROTECTION CONTRACTOR, BASED ON HYDRAULIC CALCULATIONS.

J. PROVIDE SUPPLEMENTAL DRAINS AS NECESSARY TO PROVIDE 100% SYSTEM DRAINAGE. LOCATE DRAINS ABOVE ACCESSIBLE CEILINGS.

K. REFER TO ARCHITECTURAL PLANS FOR EXACT PHASING REQUIREMENTS.

L. REFER TO SPECIFICATIONS FOR FIRE SUPPRESSION HAZARD OCCUPANCY CLASSIFICATIONS.

M. SPRINKLER PIPING SHALL BE A MINIMUM OF ONE INCH.

N. UNLESS OTHERWISE STATED ON DRAWINGS OR IN THE SPECIFICATIONS, ALL SPRINKLER HEADS SHALL BE QUICK RESPONSE.

O. ALL SPRINKLER HEADS LOCATED IN CEILING TILES SHALL BE LOCATED IN CENTER OF THE CEILING TILE.

P. ALL SPRINKLER ZONES SHALL MATCH SMOKE COMPARTMENTS. REFER TO ARCHITECTURAL PLANS FOR INFORMATION ON SMOKE COMPARTMENTS, SMOKE PARTITIONS AND FIRE BARRIERS.

Q. CONTRACTOR SHALL REMOVE AND REPLACE CEILING TILES AND GRID AS REQUIRED TO COMPLETE DEMOLITION AND NEW WORK IN AREAS OUTSIDE OF RENOVATION PROJECT. CONTRACTOR SHALL BE RESPONSIBLE FOR REPLACING ANY TILES OR GRID DAMAGED DUE TO THIS WORK.

FIRE SUPPRESSION PIPING LEGEND

—F—	FIRE SUPPRESSION PIPING
FR	FIRE RISER
SP	STAND PIPE
FDV	FIRE DEPARTMENT VALVE
EC	ELECTRICAL CONTRACTOR
HC	HVAC CONTRACTOR
FSC	FIRE SUPPRESSION CONTRACTOR
GC	GENERAL CONTRACTOR
X	EXISTING TO REMAIN
XR	EXISTING TO BE REMOVED
	ISOLATION VALVE
	VALVED AND CAPPED FIRE DEPARTMENT VALVE
	PRESSURE GAUGE
MAV	MANUAL AIR VENT
	LIMIT OF DEMOLITION
	CONNECT TO EXISTING
TS	TAMPER SWITCH ON VALVE
FS	FLOW SWITCH
DETAIL NO. 3 / DRAWING 1-FP1-1	DETAIL MARK
L	LIGHT HAZARD OCCUPANCY
OH1	ORDINARY HAZARD GROUP 1
OH2	ORDINARY HAZARD GROUP 2

FOR CONSTRUCTION

FULLY SPRINKLERED

Revisions:	Date
FINAL CD SUBMISSION - FOR CONSTRUCTION	07-11-12

CONSULTANTS:

STATE OF OHIO — BRIAN A. WIDOWSKI E-66625 — REGISTERED PROFESSIONAL ENGINEER — 12026

ARCHITECT/ENGINEERS:

MAKOVICH & PUSTI ARCHITECTS, INC.
111 FRONT STREET BEREA, OHIO 44017
(440) 991-9910 p (440) 991-0900 f

FREDRICK, FREDRICK & HELLER ENGINEERS, INC.
677 EAST ROYALTON ROAD
BROADVIEW HTS., OHIO 44147
TEL (440) 546-9090
FAX (440) 546-9050

Drawing Title: FIRE PROTECTION LEGEND AND GENERAL NOTES

Approved: Project Director

Project Title: VAMC WADE PARK CLEVELAND DIETETICS ADMIN SPACE AND STORAGE

Location: 10701 EAST BLVD, CLEVELAND, OHIO 44106

Date	Checked By	Drawn By
07-11-12	BMW	RPH

Project Number: 541-12-113

Building Number: 1

Drawing Number: 1-FP1

Office of Construction and Facilities Management

Department of Veterans Affairs

VA FORM 08-6231

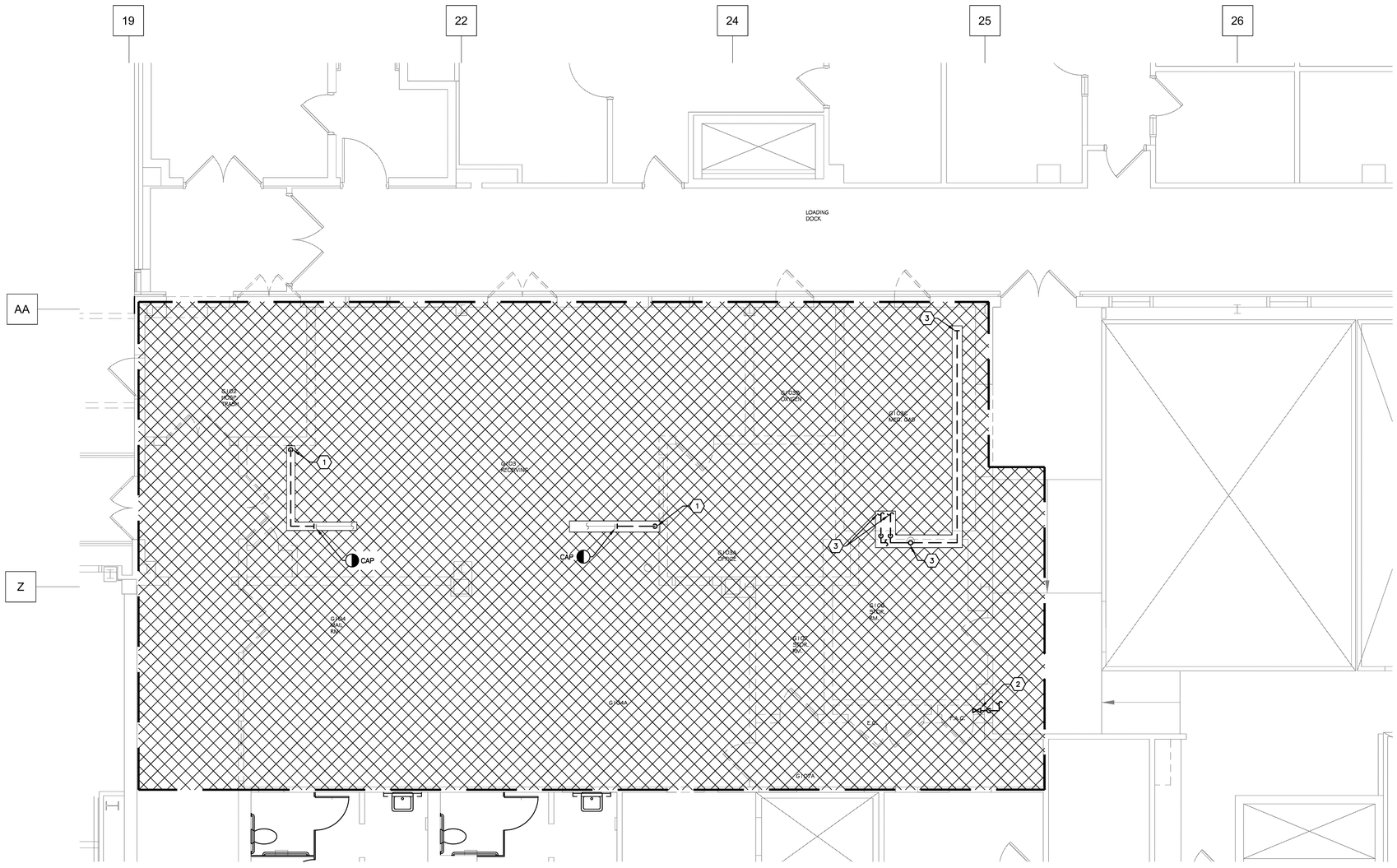

PARTIAL FIRST FLOOR FIRE PROTECTION DEMOLITION PLAN

SCALE: 1/4" = 1'0"

0' 2' 4' 8' 16'

1

FIRE SUPPRESSION DEMOLITION LEGEND

REWORK EXISTING SPRINKLER MAIN PIPING IN OUTLINED AREA TO ACCOMMODATE RENOVATIONS AND INSTALLATION OF ALL NEW TRADES. REMOVE ALL EXISTING SPRINKLER HEADS AND BRANCH PIPING BACK TO MAINS.

CODED NOTES:

1. EXISTING VALVED AND CAPPED 1" SPRINKLER PIPE DOWN ALONG WALL. REMOVE PIPE BACK TO MAIN AND CAP.
2. EXISTING 2" FIRE DEPARTMENT VALVE PIPE IN CLOSET. REMOVE VALVE AND PIPE BACK ABOVE CEILING AND CAP.
3. EXISTING DRY SPRINKLER SYSTEM TO BE REMOVED. REMOVE EXISTING 4" VALVE, COMPRESSOR, AND SYSTEM COMPONENTS AND TURN OVER TO OWNER. REMOVE 4" RISER BACK BELOW FLOOR AND CAP. REMOVE BRANCH PIPING AND EXISTING SPRINKLER HEADS COMPLETE. COORDINATE DEACTIVATION AND REMOVAL OF SYSTEM WITH VA COTR.

FOR CONSTRUCTION

FULLY SPRINKLERED

Revisions:	Date
FINAL CD SUBMISSION - FOR CONSTRUCTION	07-11-12

CONSULTANTS:

STATE OF OHIO
BRIAN D. WIDOWSKI
E-66625
REGISTERED PROFESSIONAL ENGINEER
12026

ARCHITECT/ENGINEERS:

MAKOVICH & PUSTI ARCHITECTS, INC.
111 FRONT STREET BEREA, OHIO 44017
(440) 991-9910 p (440) 991-0086 f

FREDRICK, FREDRICK & HELLER ENGINEERS, INC.
677 EAST BOYNTON ROAD
BROADVIEW HTS., OHIO 44147
TEL: (440) 546-9930
FAX: (440) 546-9939

Drawing Title: PARTIAL FIRST FLOOR FIRE PROTECTION DEMOLITION PLAN	Project Title: VAMC WADE PARK CLEVELAND DIETETICS ADMIN SPACE AND STORAGE		Project Number: 541-12-113
Approved: Project Director	Location: 10701 EAST BLVD, CLEVELAND, OHIO 44106		Building Number: 1
	Date: 07-11-12	Checked By: BMW / Drawn By: RPH	Drawing Number: 1-FP2

Office of Construction and Facilities Management

Department of Veterans Affairs

VA FORM 08-6231

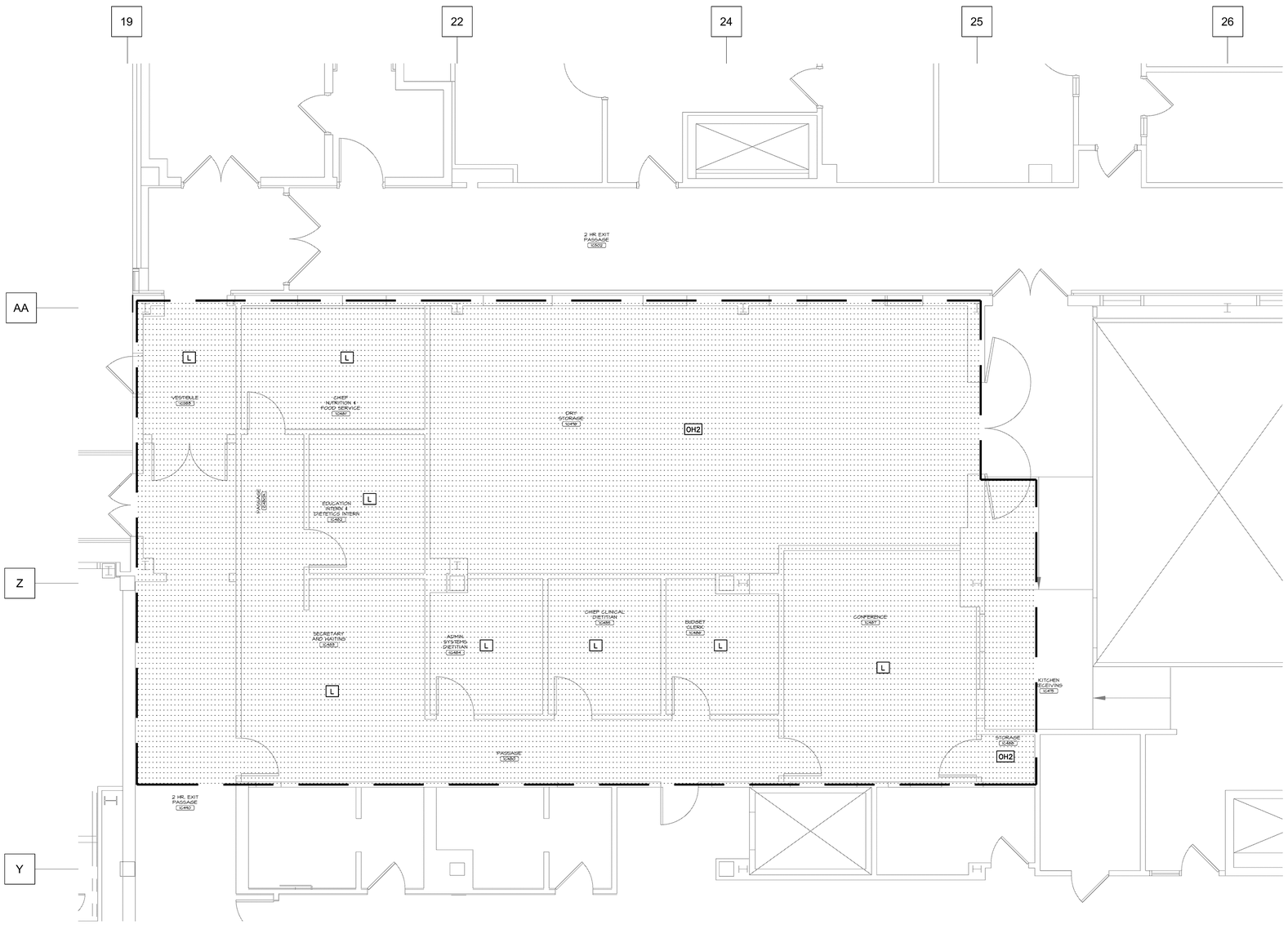

PARTIAL FIRST FLOOR FIRE PROTECTION PLAN

SCALE: 1/4" = 1'0"

0' 2' 4' 8' 16'

1

ALL OUTLINED AREAS SHALL BE 100% FULLY SPRINKLERED WITH A WET-TYPE SPRINKLER SYSTEM IN ACCORDANCE WITH NFPA 13 AND VA SPECIFICATIONS. SPRINKLER HEADS SHALL BE INSTALLED SO AS TO ACCOMMODATE ANY NEW CEILINGS. COORDINATE SPRINKLER HEAD LAYOUT WITH ARCHITECTURAL REFLECTED CEILING PLAN. REFER TO MECHANICAL SPECIFICATIONS AND FIRE SUPPRESSION NOTES FOR ADDITIONAL INFORMATION.

FIRE SUPPRESSION LEGEND

REWORK EXISTING SPRINKLER MAIN PIPING IN OUTLINED AREA TO ACCOMMODATE RENOVATIONS AND INSTALLATION OF ALL NEW TRADES. PROVIDE ALL NEW BRANCH PIPING. PROVIDE NEW RECESSED CONCEALED SPRINKLER HEADS WITH WHITE COVERPLATES IN ROOMS WITH CEILINGS. OUTLINED AREA TO BE SERVED BY EXISTING SPRINKLER ZONE SYSTEM. COORDINATE HEADS AND CEILING TYPE WITH ARCHITECTURAL REFLECTED CEILING PLAN.

FOR CONSTRUCTION

FULLY SPRINKLERED

Revisions:	Date
FINAL CD SUBMISSION - FOR CONSTRUCTION	07-11-12

CONSULTANTS:

STATE OF OHIO
GRAHAM R. WIDOWSKI
E-66625
REGISTERED
PROFESSIONAL ENGINEER
12026

ARCHITECT/ENGINEERS:

MAKOVICH & PUSTI ARCHITECTS, INC.
111 FRONT STREET BEREA, OHIO 44017
(440) 891-0910 p (440) 891-0886 f

FREDRICK, FREDRICK & HELLER ENGINEERS, INC.
677 EAST MOUNTAIN ROAD
BROADVIEW HTS., OHIO 44147
TEL: (440) 546-9936
FAX: (440) 546-9939

Drawing Title	PARTIAL FIRST FLOOR FIRE PROTECTION NEW PLAN
Approved: Project Director	
Project Title	VAMC WADE PARK CLEVELAND DIETETICS ADMIN SPACE AND STORAGE
Location	10701 EAST BLVD, CLEVELAND, OHIO 44106
Date	07-11-12
Checked By	BMW
Drawn By	RPH
Project Number	541-12-113
Building Number	1
Drawing Number	1-FP3

Office of Construction and Facilities Management

Department of Veterans Affairs

VA FORM 08-6231

PLUMBING GENERAL NOTES:

A. LOCATIONS AND ROUTING OF EXISTING PIPING, DUCTWORK AND EQUIPMENT IS PRESUMED FROM EXISTING DRAWINGS. MECHANICAL CONTRACTOR SHALL FIELD VERIFY ALL PRIOR TO COMMENCEMENT OF CONSTRUCTION. NOTIFY ENGINEER OF ANY CONDITIONS WHICH WILL NOT PERMIT THE WORK TO BE PERFORMED AS INDICATED ON THESE DRAWINGS.

B. COORDINATE ALL SHUT-DOWNS OF EXISTING MECHANICAL SYSTEMS WITH OWNER A MINIMUM OF TEN WORKING DAYS IN ADVANCE.

C. PRIOR TO INSTALLATION, VERIFY PRECISE LOCATION OF NEW WALL MOUNTED DEVICES WITH OWNER AND ARCHITECT.

D. PROVIDE ADEQUATE SERVICE CLEARANCE FOR ALL MECHANICAL EQUIPMENT. REFER TO INSTRUCTIONS FROM THE EQUIPMENT MANUFACTURER.

E. NEW PIPING SHALL NOT BE ROUTED ABOVE ELECTRICAL PANELS. REFER TO ELECTRICAL DRAWINGS FOR LOCATION OF PANELS.

F. WHERE EXISTING FIXTURES ARE TO BE REMOVED, REMOVE ALL ASSOCIATED BRANCH PIPING WHICH IS NOT TO BE REUSED. REMOVE PIPING TO MAINS AND CAP.

G. CONTRACTOR SHALL REMOVE AND REPLACE CEILING TILES AND GRID AS REQUIRED TO COMPLETE DEMOLITION AND NEW WORK IN AREAS OUTSIDE OF RENOVATION PROJECT. CONTRACTOR SHALL BE RESPONSIBLE FOR REPLACING ANY TILES OR GRID DAMAGED DUE TO THIS WORK.

H. REFER TO ARCHITECTURAL PLANS FOR SCHEDULING/PHASING OF WORK PERFORMED ABOVE FIRST FLOOR SPD DEPARTMENT CEILINGS.

I. CONTRACTOR SHALL PROVIDE NEW CHASE ENCLOSURES WHERE EXISTING STORM, SANITARY, WATER, VENT RISERS ARE TO REMAIN, BUT ARE UNCOVERED/EXPOSED DURING CONSTRUCTION. ENCLOSURES SHALL FULLY CONCEAL PIPING. COORDINATE REQUIREMENTS WITH GENERAL TRADES.

PLUMBING SYMBOLS:

A	REFERENCE TO CODED NOTE
PXXX	EQUIPMENT OR FIXTURE MARK
CTE	CONNECT TO EXISTING
VTR	VENT THROUGH ROOF
PC	PLUMBING CONTRACTOR
GC	GENERAL CONTRACTOR
EEW	EMERGENCY EYE WASH
EWC	ELECTRIC WATER COOLER
—ST—	STORM WATER PIPING
—OST—	STORM OVERFLOW PIPING
- -UST- -	STORM BELOW GRADE
—SAN—	SANITARY WASTE
- -USAN- -	SANITARY WASTE BELOW GRADE
- - USS - -	SUBSOIL DRAINAGE BELOW GRADE
- - V - -	PLUMBING VENT
—AW—	ACID WASTE
—AV—	ACID VENT
—TW—	DOMESTIC TEMPERED WATER SUPPLY
—CW—	DOMESTIC COLD WATER SUPPLY
—HW—	DOMESTIC HOT WATER SUPPLY
—HWR—	DOMESTIC HOT WATER RETURN
—NPCW—	NON-POTABLE COLD WATER
ORD	OVERFLOW ROOF DRAIN
RD	ROOF DRAIN
RWC	RAIN WATER CONDUCTOR
FD	FLOOR DRAIN
X	EXISTING TO REMAIN
XR	EXISTING TO BE REMOVED
	ISOLATION VALVE
	CHECK VALVE
	UNION
	REDUCER
	STRAINER
	BALANCING VALVE
	PIPE GUIDE
	PIPE EXPANSION ANCHOR
	LIMIT OF DEMOLITION
	CONNECT TO EXISTING
	CUT AND PATCH FLOOR TO INSTALL PIPING BELOW GRADE
DETAIL NO. / DRAWING (3 / 1-P1-1)	DETAIL MARK

FOR CONSTRUCTION

FULLY SPRINKLERED

Revisions:	Date
FINAL CD SUBMISSION - FOR CONSTRUCTION	07-11-12

CONSULTANTS:

STATE OF OHIO
BRIAN M. WIDOWSKI
E-66625
REGISTERED PROFESSIONAL ENGINEER
12026

ARCHITECT/ENGINEERS:

MAKOVICH & PUSTI ARCHITECTS, INC.
111 FRONT STREET BEREA, OHIO 44017
(440) 891-9910 p (440) 891-0086 f

FREDRICK, FREDRICK & HELLER ENGINEERS, INC.
677 EAST ROYALTON ROAD
BROADVIEW HTS., OHIO 44147
TEL (440) 546-9890
FAX (440) 546-9899

Drawing Title: PLUMBING LEGEND AND GENERAL NOTES

Approved: Project Director

Project Title: VAMC WADE PARK CLEVELAND DIETETICS ADMIN SPACE AND STORAGE

Location: 10701 EAST BLVD, CLEVELAND, OHIO 44106

Date	Checked By	Drawn By
07-11-12	BMW	RPH

Project Number: 541-12-113

Building Number: 1

Drawing Number: 1-P1

Office of Construction and Facilities Management

Department of Veterans Affairs

VA FORM 08-6231

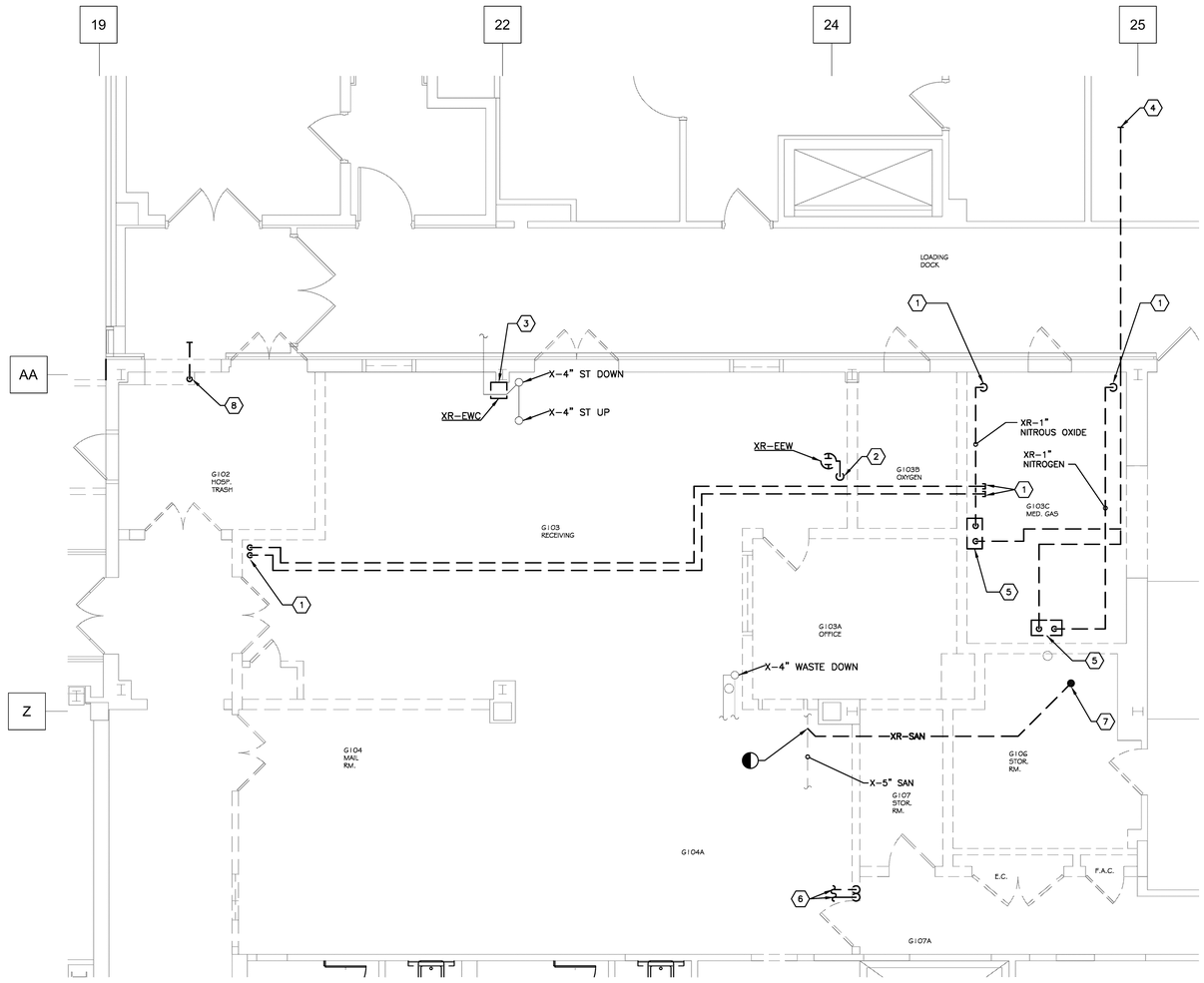

PARTIAL FIRST FLOOR PLUMBING DEMOLITION PLAN

SCALE: 1/4" = 1'0"

0' 2' 4' 8' 16'

1

GENERAL NOTES:

A. CONTRACTOR SHALL FIRESTOP ALL PENETRATIONS OF FIRE RATED WALL FOR NEW AND EXISTING PLUMBING SYSTEMS. REFER TO ARCHITECTURAL LIFE SAFETY PLAN FOR FIRE RATED WALLS.

CODED NOTES:

1. REMOVE EXISTING ABANDONED NITROGEN AND NITROUS OXIDE PIPING BACK BELOW FLOOR AND CAP. FIELD VERIFY THAT PIPING IS ABANDONED AND COORDINATE WITH VA COTR.
2. REMOVE EXISTING EMERGENCY EYEWASH STATION COMPLETE. REMOVE BRANCH COLD WATER PIPING BACK BELOW FLOOR AND CAP. REMOVE DRAIN PIPING BACK TO EXISTING MAIN AND CAP.
3. REMOVE EXISTING ELECTRIC WATER COOLER COMPLETE. REMOVE ASSOCIATED COLD WATER PIPING BACK BELOW FLOOR AND CAP. REMOVE ASSOCIATED DRAIN PIPING BACK TO EXISTING MAIN AND CAP.
4. REMOVE EXISTING EMERGENCY RELIEF VENT COMPLETE.
5. REMOVE EXISTING MEDICAL GAS MANIFOLD COMPLETE, INCLUDING MASTER ALARMS. RETURN MANIFOLD TO OWNER. REMOVE ASSOCIATED VENT AND GAS PIPING BACK TO POINT INDICATED. FIELD VERIFY THAT MANIFOLDS ARE ABANDONED AND COORDINATE WORK WITH VA COTR.
6. REMOVE EXISTING COLD WATER, WASTE AND VENT PIPING BACK TO ACTIVE MAIN AND CAP.
7. REMOVE EXISTING FLOOR DRAIN COMPLETE. REMOVE ASSOCIATED TRAP AND WASTE PIPING IN BASEMENT FLOOR BACK TO ACTIVE MAIN AND PATCH MAIN. CONTRACTOR SHALL REMOVE AND REPLACE EXISTING CEILINGS IN BASEMENT AS NEEDED TO COMPLETE WORK. WORK IN BASEMENT LEVEL SHALL BE PERFORMED DURING NORMALLY UNOCCUPIED HOURS. COORDINATE WORK WITH VA COTR.
8. REMOVE EXISTING DOMESTIC COLD WATER RISER FROM FIRST FLOOR CEILING BACK THROUGH FLOOR TO BASEMENT CEILING AND CAP. CONTRACTOR SHALL REMOVE AND REPLACE EXISTING CEILINGS IN BASEMENT AS NEEDED TO COMPLETE WORK. WORK IN BASEMENT LEVEL SHALL BE PERFORMED DURING NORMALLY UNOCCUPIED HOURS. COORDINATE WORK WITH VA COTR.

FOR CONSTRUCTION

FULLY SPRINKLERED

Revisions:	Date
FINAL CD SUBMISSION - FOR CONSTRUCTION	07-11-12

CONSULTANTS:

STATE OF OHIO
BRIAN M. WIDOWSKI
E-66625
REGISTERED PROFESSIONAL ENGINEER
12026

ARCHITECT/ENGINEERS:

MAKOVICH & PUSTI ARCHITECTS, INC.
111 FRONT STREET BEREA, OHIO 44017
(440) 891-9919 p (440) 891-0066 f

FREDRICK, FREDRICK & HELLER ENGINEERS, INC.
677 EAST BOYALTON ROAD
BROADVIEW HTS., OHIO 44147
TEL: (440) 546-9930
FAX: (440) 546-9939

Drawing Title: PARTIAL FIRST FLOOR PLUMBING DEMOLITION PLAN

Approved: Project Director

Project Title: VAMC WADE PARK CLEVELAND DIETETICS ADMIN SPACE AND STORAGE

Location: 10701 EAST BLVD, CLEVELAND, OHIO 44106

Date	Checked By	Drawn By
07-11-12	BMW	RPH

Project Number: 541-12-113

Building Number: 1

Drawing Number: 1-P2

Office of Construction and Facilities Management

Department of Veterans Affairs

VA FORM 08-6231

MECHANICAL SYMBOLS:

ABBREVIATIONS:

AC	AIR CONDITIONING UNIT
AD	ACCESS DOOR
AFF	ABOVE FINISHED FLOOR
AHU	AIR HANDLING UNIT
AP	ACCESS PANEL
CO	CLEAN OUT
CFM	CUBIC FEET PER MINUTE
CW	COLD WATER
DDC	DIRECT DIGITAL CONTROL
EA	EXHAUST AIR
EF	EXHAUST FAN
EX.	EXISTING
FLR.	FLOOR
FD	FIRE DAMPER
FSD	COMBINATION FIRE/SMOKE DAMPER
GPM	GALLONS PER MINUTE
GV	GRAVITY VENTILATOR
HC	HEATING COIL
HP	HORSEPOWER
MAX.	MAXIMUM
MIN.	MINIMUM
N.T.S.	NOT TO SCALE
OA	OUTDOOR AIR
RA	RETURN AIR
REA	RELIEF AIR
RF	RETURN FAN
RH	REHEAT COIL
SA	SUPPLY AIR
SS	STAINLESS STEEL
TCP	TEMPERATURE CONTROL PANEL
VD	VOLUME DAMPER
VFD	VARIABLE FREQUENCY DRIVE
Wb	WET BULB TEMPERATURE
X	EXISTING
XR	EXISTING TO BE REMOVED
XRL	EXISTING TO BE RELOCATED

GENERAL SYMBOLS:

- POINT OF CONNECTION BETWEEN NEW AND EXISTING WORK
- LIMIT OF DEMOLITION
- EXISTING TO REMAIN
- EXISTING TO BE REMOVED
- EXISTING TO BE RELOCATED

CALL OUTS:

- # REFERENCE TO CODED NOTE
- EQUIPMENT TYPE — VAV # — UNIT NUMBER: EQUIPMENT OR FIXTURE MARK
- TYPE — A 2000 36X24 — CONNECTION SIZE AT DEVICE: AIR DISTRIBUTION DEVICE

DUCTWORK SYMBOLS:

- 24x18 RECTANGULAR DUCT SIZE
- 12"ø ROUND DUCT SIZE
- MANUAL BALANCING DAMPER ON DUCT TO BE MOUNTED OVER ACCESSIBLE CEILING
- SUPPLY AIR DUCT
- RETURN AIR DUCT
- EXHAUST AIR DUCT
- SINGLE LINE: INDICATES TRANSITION
- SUPPLY AIR DIFFUSER
- RETURN AIR GRILLE
- EXHAUST AIR GRILLE
- SHADING INDICATES TO PROVIDE QUADRANT BLANK-OFF IN NECK OF DIFFUSER. TO BE FURNISHED WITH DIFFUSER.
- UP / DN: SUPPLY DUCT (UP & DOWN)
- UP / DN: RETURN DUCT (UP & DOWN)
- SUPPLY TOP REGISTER OR GRILLE (WALL TYPE)
- EXHAUST OR RETURN CEILING REGISTER OR GRILLE
- EXHAUST OR RETURN BOTTOM REGISTER OR GRILLE (WALL TYPE)
- EXHAUST OR RETURN REGISTER OR TOP GRILLE (WALL TYPE)
- FD: FIRE DAMPER

CONTROL SYMBOLS:

- T PNEUMATIC THERMOSTAT
- T DDC THERMOSTAT

HVAC PIPING:

- 9'-2" HEIGHT OF BOTTOM OF PIPE ABOVE FLOOR
- –HHWS– HEATING HOT WATER SUPPLY
- –HHWR– HEATING HOT WATER RETURN
- – LPS – LOW PRESSURE STEAM
- – LPR – LOW PRESSURE STEAM CONDENSATE RETURN
- SHUTOFF VALVE
- CHECK VALVE
- UNION
- REDUCER OR INCREASER
- PIPE TRANSITION
- ECCENTRIC REDUCER
- TOP CONNECTION, 45° OR 90°
- BOTTOM CONNECTION, 45° OR 90°
- SIDE CONNECTION
- DIRECTION OF FLOW
- TRIPLE DUTY VALVE (SHUTOFF, BALANCE, CHECK)
- STRAINER
- BALANCING VALVE
- PRESSURE REDUCING VALVE
- FLEXIBLE PIPE CONNECTOR
- THERMOMETER IN PIPE WELL
- GAUGE PORT (PETE'S PLUG)
- 3-WAY CONTROL VALVE
- 2-WAY CONTROL VALVE
- PRESSURE GAUGE
- NO NORMALLY OPEN
- NC NORMALLY CLOSED

VAV TERMINALS (VAV X)

	MARK	MAX. AIRFLOW (CFM)	MIN. AIRFLOW (CFM)	TERMINAL TYPE (NOTE 2)	CONTROL TYPE (NOTE 5)	HOT WATER HEATING COIL PERFORMANCE						
						AIRFLOW (CFM)	CAPACITY (MBH)	ENTERING AIR TEMP (°F)	LEAVING AIR TEMP (°F)	WATER FLOW (GPM)	MAX WPd	BRANCH PIPE SIZE
X-AHU-E-1-2	VAV-1	400	320	B	1	320	11.0	55.0	86.7	1.0	5.0	3/4"
	VAV-2	110	50	A	1	50	2.1	55.0	93.7	0.5	5.0	3/4"
	VAV-3	110	50	A	1	50	2.1	55.0	93.7	0.5	5.0	3/4"
	VAV-4	220	100	A	1	100	4.3	55.0	94.5	0.5	5.0	3/4"
	VAV-5	240	100	A	2	100	4.5	55.0	96.8	0.5	5.0	3/4"
	VAV-6	130	50	A	1	50	2.1	55.0	93.7	0.5	5.0	3/4"
	VAV-7	260	140	A	1	140	7.0	55.0	101.1	0.75	5.0	3/4"
	VAV-8	675	320	B	1	320	15.1	55.0	98.5	1.5	5.0	3/4"

VAV TERMINAL NOTES:

1. TERMINALS SHALL BE CAPABLE OF OPERATING WITH A MINIMUM INLET PRESSURE OF 0.5 IN. W.G. PROVIDE WITH SCREW ACCESS (UN-HINGED) WHERE TERMINALS ARE INSTALLED IN THE BEAM/JOIST SPACE.
2. REFER TO "VARIABLE AIR VOLUME TERMINALS: CONNECTION SCHEDULE" FOR TERMINAL SIZE, DUCT CONNECTIONS AND DUCT SIZES.
3. REFER TO SPECIFICATIONS FOR ADDITIONAL INFORMATION.
4. ALL VAVS SHALL BE SELECTED WITH A MINIMUM 2-ROW REHEAT COIL.
5. REFER TO CONTROLS DRAWINGS FOR CONTROL STRATEGIES.

VARIABLE AIR VOLUME TERMINALS : CONNECTION SCHEDULE

TERMINAL TYPE	INLET		MAX AIRFLOW (CFM)	TERMINAL AIR PRESSURE DROP (IN W.G.)	RADIATED NOISE (NC)	DISCHARGE	
	TERMINAL NECK SIZE (IN)	SUPPLY DUCT (IN)				TERMINAL CONN. SIZE (IN)	DISCHARGE DUCT (IN)
A	6"ø	8"ø	350	1.0"	25	12x8	10x10
B	8"ø	10"ø	700	1.0"	27	12x10	12x12

NOTES:

1. UNLESS OTHERWISE NOTED ON PLANS, PROVIDE DUCT SIZES AS INDICATED. CONTRACTOR IS PERMITTED TO UTILIZE AN EQUIVALENT FREE AREA AS NECESSARY.
2. CONTRACTOR SHALL PROVIDE ALL TRANSITIONS/OFFSETS AS NECESSARY.

AIR DISTRIBUTION DEVICE (DIFFUSERS, REGISTERS AND GRILLES) (X) CFM NECK

MARK	TYPE	FACE SIZE (INCHES)	NECK SIZE (INCHES)	STYLE	COLOR	MATERIAL	FACTORY DAMPER	NOTES
S1	SUPPLY DIFFUSER	24x24	SEE TAG	PLAQUE FACE LAY-IN	WHITE	ALUMINUM	–	1
S2	SUPPLY DIFFUSER	48x8	SEE PLANS	LINEAR 2-SLOT DIFFUSER	WHITE	ALUMINUM	INTEGRAL PATTERN CONTROLLER	1,2
R1	RETURN GRILLE	24x24	SEE TAG	PERFORATED FACE LAY-IN	WHITE	ALUMINUM	–	1
R2	RETURN GRILLE	24x12	SEE TAG	PERFORATED FACE LAY-IN	WHITE	ALUMINUM	–	1

NOTES:

1. REFER TO SPECIFICATIONS FOR ADDITIONAL INFORMATION.
2. PROVIDE END CAPS ON BOTH ENDS, 48" PLENUM, EXTERIOR INSULATED IN FIELD.

PROJECT COORDINATION NOTES:

A. THIS PROJECT CONSISTS OF MULTIPLE TRADES OF WORK PERFORMED WITHIN AN EXISTING BUILDING, ALL OF WHICH ALLOWS VERY LITTLE PERMISSIBLE RANGE OF VARIATION. THE CONTRACTOR SHALL TAKE CAREFUL CONSIDERATION WITH THE COORDINATION AND INSTALLATION OF THE MULTITUDE OF NEW SYSTEMS WHILE ALSO ACCOMMODATING ANY EXISTING SYSTEMS TO REMAIN.

B. THE CONTRACTOR SHALL BE RESPONSIBLE FOR COORDINATING ALL TRADES ASSOCIATED WITH THIS PROJECT AND ISSUING COORDINATION PLANS PRIOR TO COMMENCEMENT OF EACH PHASE OF CONSTRUCTION.

C. THE COORDINATION DRAWINGS SHALL ILLUSTRATE ALL SYSTEMS IN PLACE. NO EXCEPTIONS! THE CONTRACTOR SHALL SHOW ALL NECESSARY OFFSETS, TRANSITIONS, ETC. AS REQUIRED IN ORDER TO ACCOMMODATE CONDITIONS IDENTIFIED IN THE FIELD.

D. IF CONFLICTS ARE IDENTIFIED DURING THE DEVELOPMENT OF COORDINATION PLANS, THE CONTRACTOR SHALL NOTIFY THE VA COTR, ARCHITECT, AND/OR ENGINEER OF ANY CONDITIONS WHICH WILL NOT PERMIT THE WORK TO BE PERFORMED AS INDICATED ON THE PROJECT PLANS.

E. A COMPLETED SET OF COORDINATION PLANS ISSUED FOR REVIEW SHALL CONFIRM THAT THE CONTRACTOR FULLY UNDERSTANDS THE PROJECT CONSTRAINTS AND ALL KNOWN CONFLICTS HAVE BEEN ADDRESSED.

HVAC GENERAL NOTES:

A. LOCATIONS AND ROUTING OF EXISTING PIPING, DUCTWORK AND EQUIPMENT IS PRESUMED FROM EXISTING DRAWINGS. MECHANICAL CONTRACTOR SHALL FIELD VERIFY ALL PRIOR TO COMMENCEMENT OF CONSTRUCTION. NOTIFY ENGINEER OF ANY CONDITIONS WHICH WILL NOT PERMIT THE WORK TO BE PERFORMED AS INDICATED ON THESE DRAWINGS.

B. COORDINATE ALL SHUT-DOWNS OF EXISTING MECHANICAL SYSTEMS WITH OWNER A MINIMUM OF TEN WORKING DAYS IN ADVANCE.

C. PRIOR TO INSTALLATION, VERIFY PRECISE LOCATION OF NEW WALL MOUNTED DEVICES WITH OWNER AND ARCHITECT. REFER TO ARCHITECTURAL REFLECTED CEILING PLAN FOR PRECISE LOCATION OF CEILING MOUNTED DEVICES. COORDINATE ROOF MOUNTED EQUIPMENT WITH ARCHITECT PRIOR TO INSTALLATION.

D. PROVIDE ADEQUATE SERVICE CLEARANCE FOR ALL MECHANICAL EQUIPMENT. REFER TO INSTRUCTIONS FROM THE EQUIPMENT MANUFACTURER. MAINTAIN A MINIMUM OF 18 INCH CLEARANCE AT CONTROLS FOR VARIABLE AIR VOLUME TERMINALS AND VENTURI VAV TERMINALS.

E. NEW DUCTS OR PIPING SHALL NOT BE ROUTED ABOVE ELECTRICAL PANELS. REFER TO ELECTRICAL DRAWINGS FOR LOCATION OF PANELS.

F. UNLESS NOTED OTHERWISE, BRANCH DUCTS TO DIFFUSERS SHALL BE THE SAME SIZE AS THE NECK OF THE DIFFUSER.

G. NO TEMPERATURE SENSING CONTROL DEVICES SHALL BE LOCATED OVER HEAT PRODUCING DEVICES.

H. MECHANICAL DRAWINGS ARE DIAGRAMMATIC. WHERE DUCT SIZE SHOWN IS IN CONFLICT WITH STRUCTURE OR OTHER BUILDING SYSTEM, CONTRACTOR MAY MODIFY DUCT SIZE AND PROVIDE EQUIVALENT FREE AREA DUCT.

I. WHERE EQUIPMENT IS TO BE REMOVED, REMOVE ALL ASSOCIATED PIPING, DUCTWORK, CONTROLS, CONCRETE PADS, SUPPORTS, ETC. PATCH WALL AND FLOOR OPENINGS TO MATCH ADJACENT SURFACES.

L. CONTRACTOR SHALL REMOVE AND REPLACE CEILING TILES AND GRID AS REQUIRED TO COMPLETE DEMOLITION AND NEW WORK IN AREAS OUTSIDE OF RENOVATION/ADDITION PROJECT. CONTRACTOR SHALL BE RESPONSIBLE FOR REPLACING ANY TILES OR GRID DAMAGED DUE TO THIS WORK.

M. REFER TO ARCHITECTURAL PLANS FOR SCHEDULING/PHASING OF WORK.

HVAC DESIGN DATA

OUTDOOR DESIGN TEMPERATURES: 89.4°F Db SUMMER; 73.9°F Wb SUMMER; –4.0°F Db WINTER

DESIGN ALTITUDE: 800 FT.

INDOOR AREA DESIGN CONDITIONS	SUMMER		WINTER	
	Db °F	MAX. RELATIVE HUMIDITY (%)	Db °F	MIN RELATIVE HUMIDITY (%)
CORRIDOR	75	60	70	20
OFFICE	75	60	70	20
CONFERENCE ROOM	75	60	70	20
VESTIBULES	NA	NA	50	NA
CLEAN UTILITY/STORAGE ROOM	NA	NA	NA	NA

FOR CONSTRUCTION

FULLY SPRINKLERED

Revisions:	Date
FINAL CD SUBMISSION - FOR CONSTRUCTION	07-11-12

CONSULTANTS:

STATE OF OHIO — BRIAN M. WIDOWSKI E-66625 — REGISTERED PROFESSIONAL ENGINEER — 12026

ARCHITECT/ENGINEERS:

MAKOVICH & PUSTI ARCHITECTS, INC.
111 FRONT STREET BEREA, OHIO 44017
(440) 891-8910 p (440) 891-0086 f

FREDRICK, FREDRICK & HELLER ENGINEERS, INC.
672 EAST ROYALTON ROAD
BROADVIEW HTS., OHIO 44147
TEL (440) 546-9696
FAX (440) 546-9699

Drawing Title: HVAC LEGEND, GENERAL NOTES AND SCHEDULES

Approved: Project Director

Project Title: VAMC WADE PARK CLEVELAND DIETETICS ADMIN SPACE AND STORAGE

Location: 10701 EAST BLVD, CLEVELAND, OHIO 44106

Date: 07-11-12 | Checked By: BMW | Drawn By: RPH

Project Number: 541-12-113

Building Number: 1

Drawing Number: 1-H1

Office of Construction and Facilities Management

Department of Veterans Affairs

VA FORM 08-6231

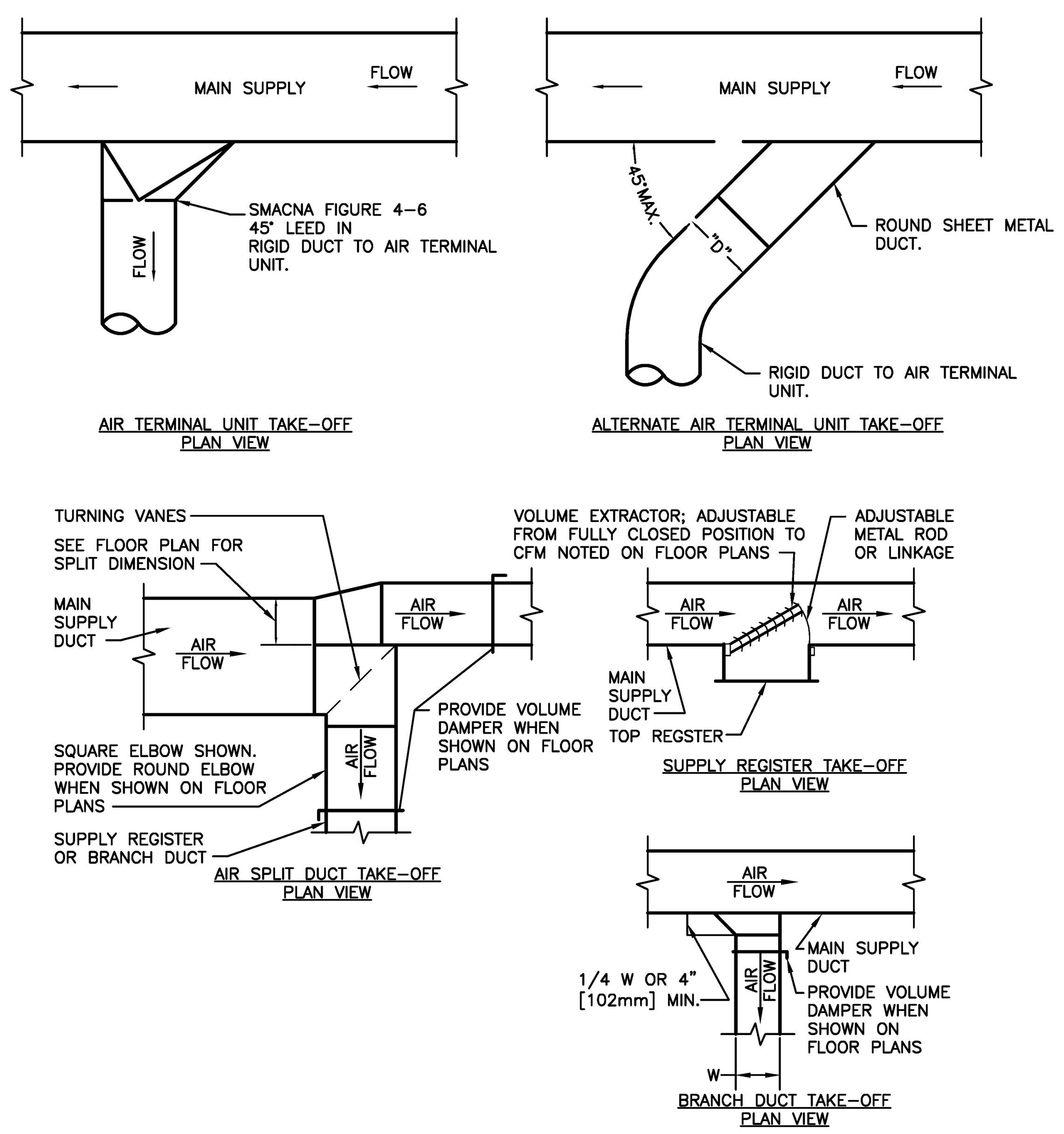

DUCTWORK TAKE-OFFS

NTS

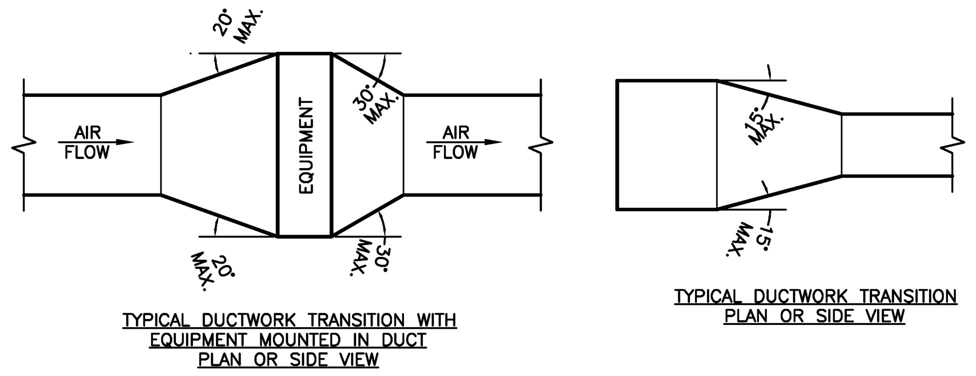

NOTE:
UNLESS OTHERWISE INDICATED ON PLANS, MAXIMUM ANGLES SHOWN SHALL APPLY.

TYPICAL DUCTWORK TRANSITION WITH EQUIPMENT MOUNTED IN DUCT

NTS

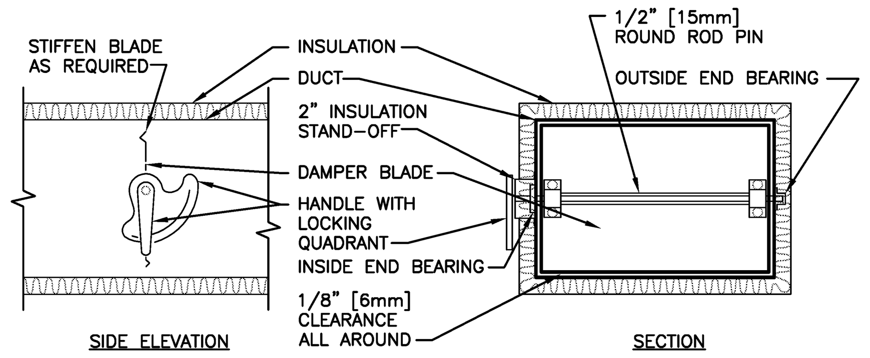

NOTE:

1. DELETE INSULATION STAND-OFF ON DUCTWORK WITHOUT EXTERIOR INSULATION.
2. DETAIL SHOWS SINGLE BLADE DAMPER. DAMPER INSTALLATION SHALL BE SIMILAR FOR MULTI-BLADE DAMPERS & ROUND DAMPERS.

VOLUME DAMPER DETAIL

NTS

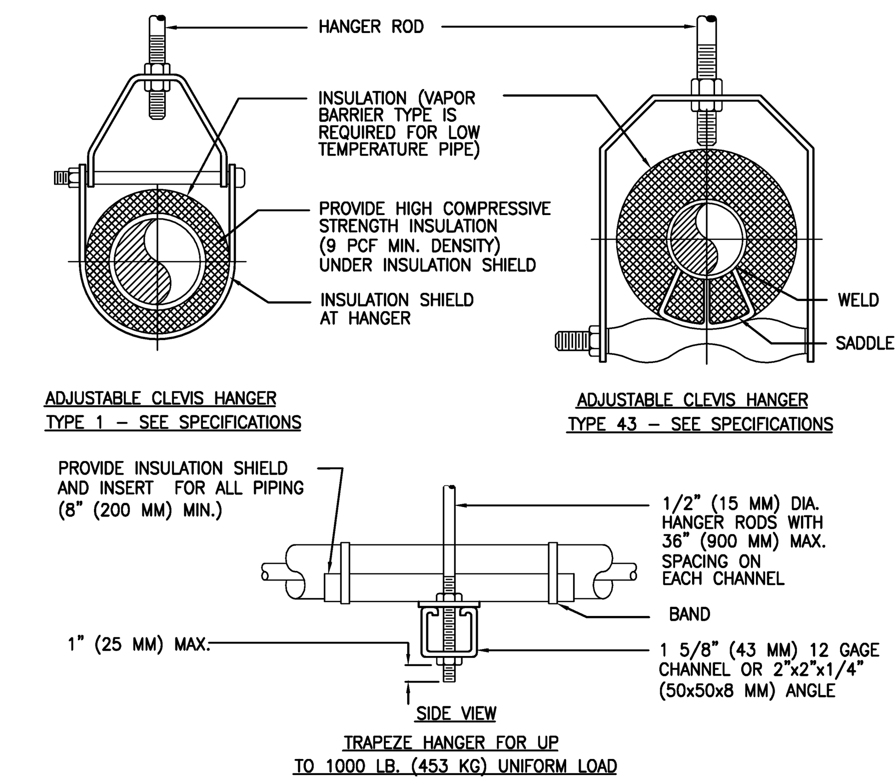

TYPICAL PIPE HANGERS

NTS

MAXIMUM PIPE/TUBING SUPPORT SPACING													
NOM. SIZE	IN. (MM)	THRU 3/4 THRU (20)	1 (25)	1 1/4 (32)	1 1/2 (40)	2 (50)	2 1/2 (65)	3 (75)	4 (100)	5 (125)	6 (150)	8 (200)
PIPE	FT. (M)	7 (2.1)	7 (2.1)	7 (2.1)	9 (2.7)	10 (3.0)	11 (3.4)	12 (3.7)	14 (4.1)	16 (4.9)	17 (5.2)	19 (5.8)
TUBING	FT. (M)	5 FT 5 FT	6 (1.8)	7 (2.1)	8 (2.4)	8 (2.4)	9 (2.7)	10 (3.0)	12 (3.7)	13 (4.0)	14 (4.1)	16 (4.9)
NOTE: FOR TRAPEZE HANGER TAKE SPACING OF SMALLEST SIZE ON TRAPEZE.												

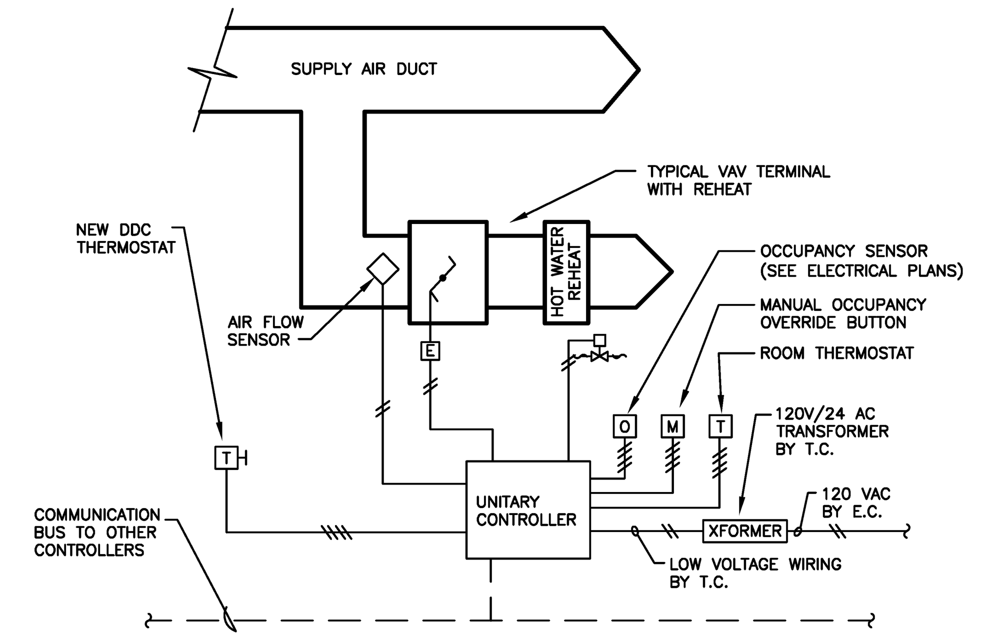

SEQUENCE OF OPERATION FOR VAV BOXES

OPERATION (APPLIES TO CONTROL TYPES 1 AND 2. REFER TO VAV SCHEDULE):

A. SPACE THERMOSTAT SHALL MODULATE DAMPER TO MAINTAIN SET POINT.
B. ON CALL FOR HEAT, RETURN DAMPER TO MINIMUM POSITION AND MODULATE HOT WATER VALVE TO MAINTAIN SETPOINT.

OCCUPANCY CONTROL (APPLIES TO CONTROL TYPE 1. REFER TO VAV SCHEDULE):

A. OCCUPANCY SHALL BE DETERMINED FROM ELECTRICAL LIGHTING OCCUPANCY SENSOR SYSTEM FOR RESPECTIVE SERVICE AREA. CONTRACTOR SHALL TIE INTO ELECTRICAL OCCUPANCY SENSOR VIA AUXILIARY DRY CONTACTS ON SENSORS. REFER TO ELECTRICAL PLANS FOR ADDITIONAL INFORMATION.
B. ROOM OVERRIDE SHALL BE POSSIBLE FROM MANUAL OCCUPANCY BUTTON. OVERRIDE SHALL BE LIMITED TO 60 MINUTES (ADJ.)
C. OCCUPIED: VAV TERMINAL SHALL OPERATE UNDER STANDARD COOLING/HEATING MODES TO MAINTAIN ROOM THERMOSTAT SETPOINTS AS LISTED IN ROOM DESIGN SCHEDULE ON DRAWING 1-H1.
D. UNOCCUPIED:
   1. VAV TERMINAL SHALL RESET TO UNOCCUPIED MINIMUM. UNOCCUPIED MINIMUM SHALL BE 50% OF OCCUPIED MINIMUM (OCCUPIED MINIMUM IS LISTED MINIMUM AIR FLOW IN VAV SCHEDULE).
   2. VAV TERMINAL SHALL OPERATE COOLING/HEATING MODES TO MAINTAIN 'UNOCCUPIED' SPACE THERMOSTAT SETPOINTS:
   3. UNOCCUPIED SPACE THERMOSTAT SETPOINTS:
      a. HEATING: 68° F (ADJ.)
      b. COOLING: 78° F (ADJ.)

GENERAL CONTROLS NOTES:

A. DAMPER OPERATORS TO BE PROVIDED BY TEMPERATURE CONTROLS CONTRACTOR.

B. TEMPERATURE CONTROL TEST SHALL INCLUDE, BUT NOT BE LIMITED TO:
   ∞ DAMPER OPERATION
   ∞ VALVE ACTUATION RESPONSE AND VALIDATION OF CORRECT OPERATION
   ∞ VERIFIED ENTIRE CONTROL SEQUENCE OPERATES PER DESIGN
   ∞ ACCOUNT FOR ALL CONTROL POINTS LISTED

C. ALL SYSTEMS SHALL BE COMMISSIONED. REFER TO SPECIFICATIONS FOR ADDITIONAL INFORMATION.

D. TEMPERATURE CONTROLS SHALL BE ANDOVER. ALL CONTROLS WORK SHALL INTERFACE WITH EXISTING ANDOVER BUILDING CONTROL SYSTEM.

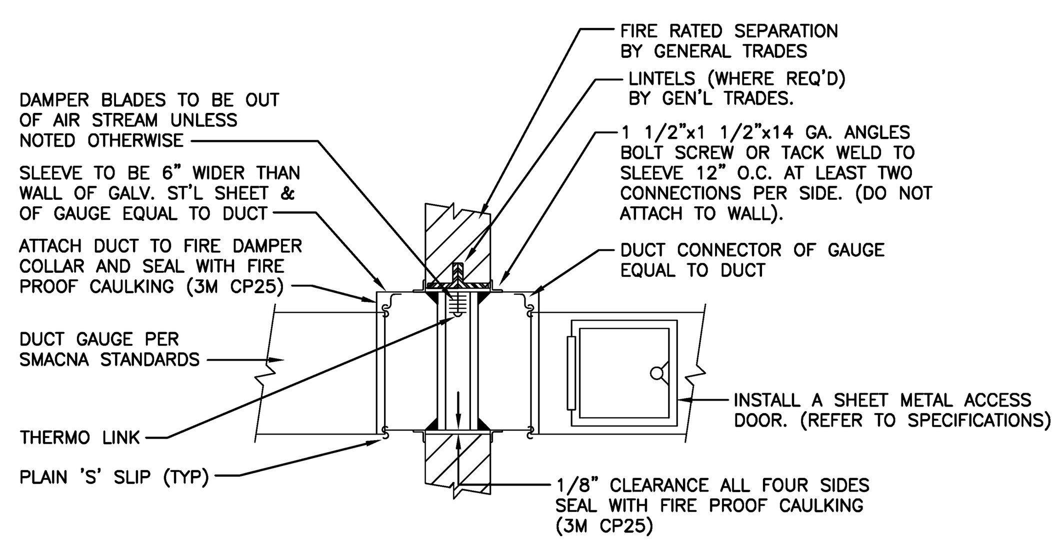

NOTE:
DYNAMIC FIRE DAMPERS TO BE U.L. LABELED. DAMPER SHALL BE SUPPLIED WITH SLEEVE INSTALLED.

TYPICAL FIRE DAMPER AT WALL PENETRATION DETAIL

NTS

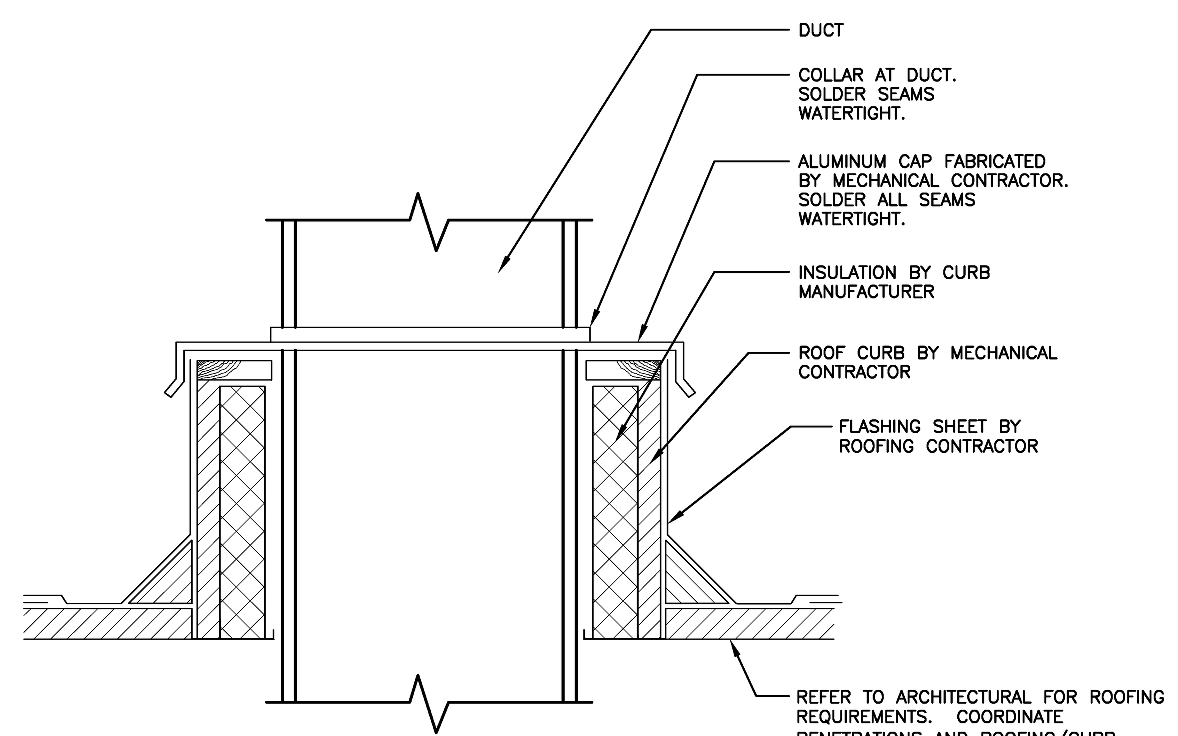

DETAIL
DUCT PENETRATION THROUGH ROOF

NOT TO SCALE

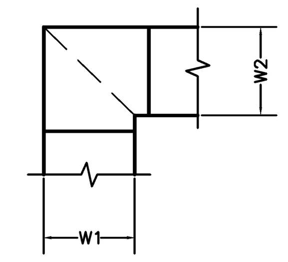

NOTE:

1. ALL VANED ELBOWS SHALL BE CONSTRUCTED AND INSTALLED AS DETAILED BY SMACNA.
2. WHEN W1 DOES NOT EQUAL W2, VANE SHALL BE SINGLE VANE TYPE REGARDLESS OF W DIMENSION.
3. ALL SINGLE VANES SHALL HAVE A 2" [50mm] RADIUS, 1 1/2" [40mm] MAXIMUM SPACE BETWEEN VANES AND A 3/4" [20mm] TRAILING EDGE.
4. WHEN W EQUALS W2 AND W1 IS GREATER THAN 20" [500mm] VANES SHALL BE DOUBLE VANE TYPE.

DUCTWORK SQUARE VANED ELBOWS

NTS

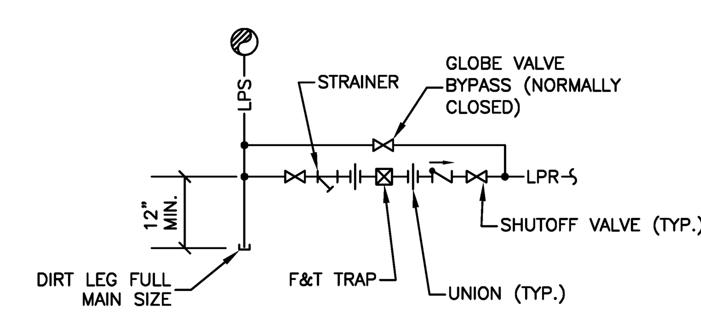

FLOAT AND THERMOSTATIC STEAM TRAP ASSEMBLY DETAIL

NTS

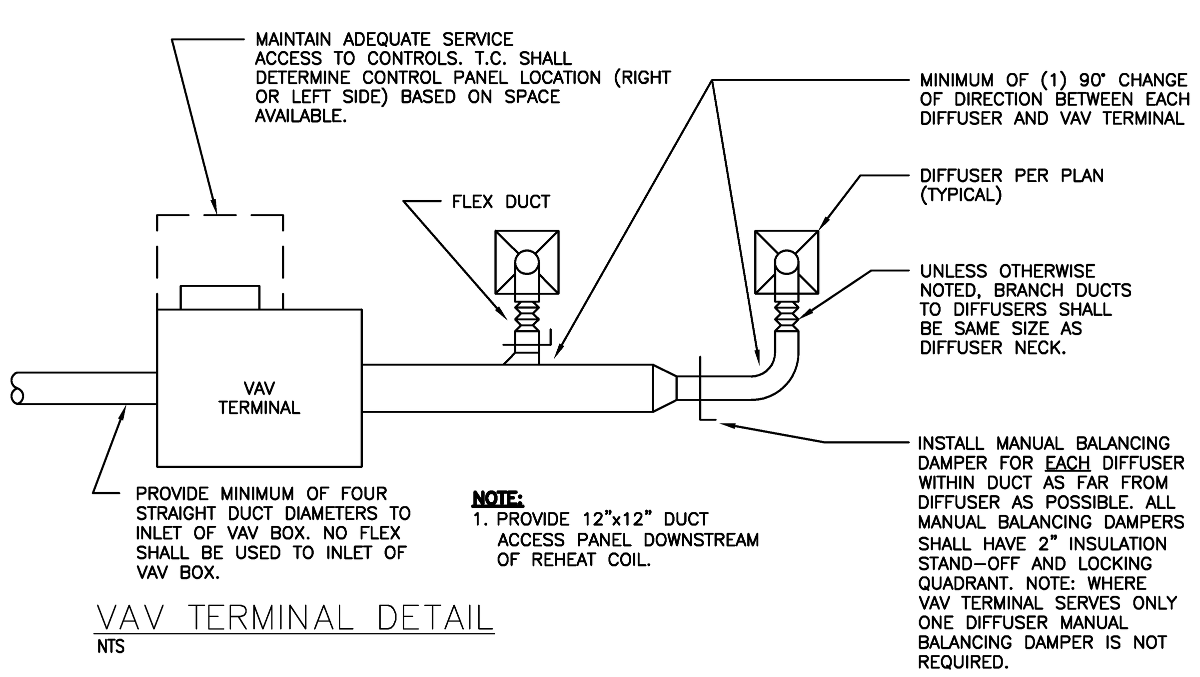

NOTE:
1. PROVIDE 12"x12" DUCT ACCESS PANEL DOWNSTREAM OF REHEAT COIL.

VAV TERMINAL DETAIL

NTS

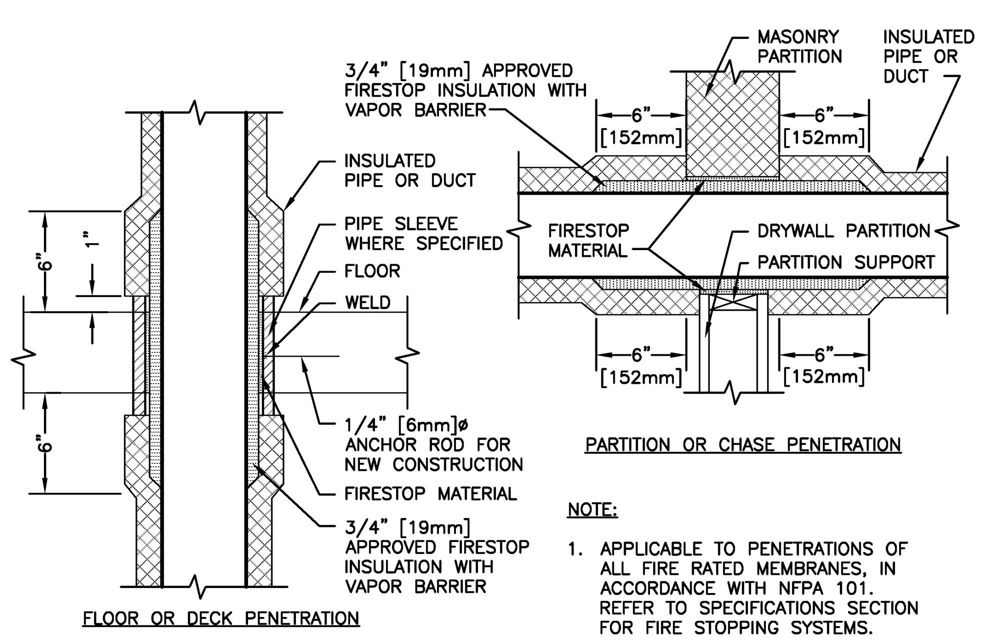

NOTE:

1. APPLICABLE TO PENETRATIONS OF ALL FIRE RATED MEMBRANES, IN ACCORDANCE WITH NFPA 101. REFER TO SPECIFICATIONS SECTION FOR FIRE STOPPING SYSTEMS.

PIPE/DUCT PENETRATION OF FIRE/SMOKE BARRIERS

NTS

MECHANICAL CONTRACTOR TO FURNISH PREFABRICATED METAL CURB WITH WOOD BLOCKING AND ALUMINUM FLASHING.

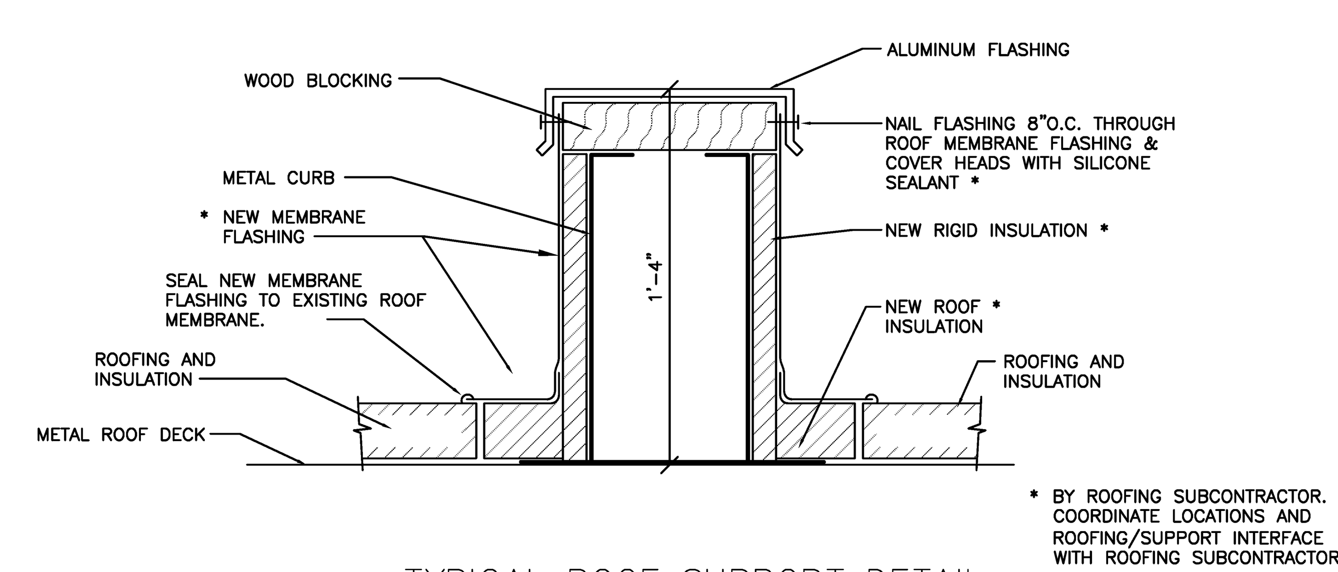

* BY ROOFING SUBCONTRACTOR. COORDINATE LOCATIONS AND ROOFING/SUPPORT INTERFACE WITH ROOFING SUBCONTRACTOR.

TYPICAL ROOF SUPPORT DETAIL

NTS

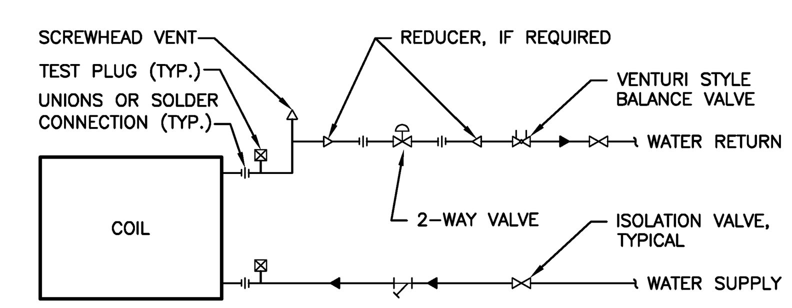

TYPICAL COIL PIPING CONNECTIONS
VAV AND DUCT-MOUNTED REHEAT COILS

NTS

NOTES:

1. BRANCH PIPING VALVES SHALL BE PROVIDED WITH PACKING GLANDS.

FOR CONSTRUCTION

FULLY SPRINKLERED

Revisions:	Date
FINAL CD SUBMISSION - FOR CONSTRUCTION	07-11-12

CONSULTANTS:

STATE OF OHIO — BRIAN M. WIDOWSKI E-66625 — REGISTERED PROFESSIONAL ENGINEER
12026

ARCHITECT/ENGINEERS:

MAKOVICH & PUSTI ARCHITECTS, INC.
111 FRONT STREET BEREA, OHIO 44017
(440) 891-8910 p (440) 891-0086 f

FREDRICK, FREDRICK & HELLER ENGINEERS, INC.
672 EAST ROYALTON ROAD
BROADVIEW HTS., OHIO 44147
TEL (440) 546-9696
FAX (440) 546-9699

Drawing Title: HVAC DETAILS AND CONTROLS

Approved: Project Director

Project Title: VAMC WADE PARK CLEVELAND DIETETICS ADMIN SPACE AND STORAGE

Location: 10701 EAST BLVD, CLEVELAND, OHIO 44106

Date: 07-11-12 | Checked By: BMW | Drawn By: RPH

Project Number: 541-12-113

Building Number: 1

Drawing Number: 1-H2

Office of Construction and Facilities Management

Department of Veterans Affairs

VA FORM 08-6231

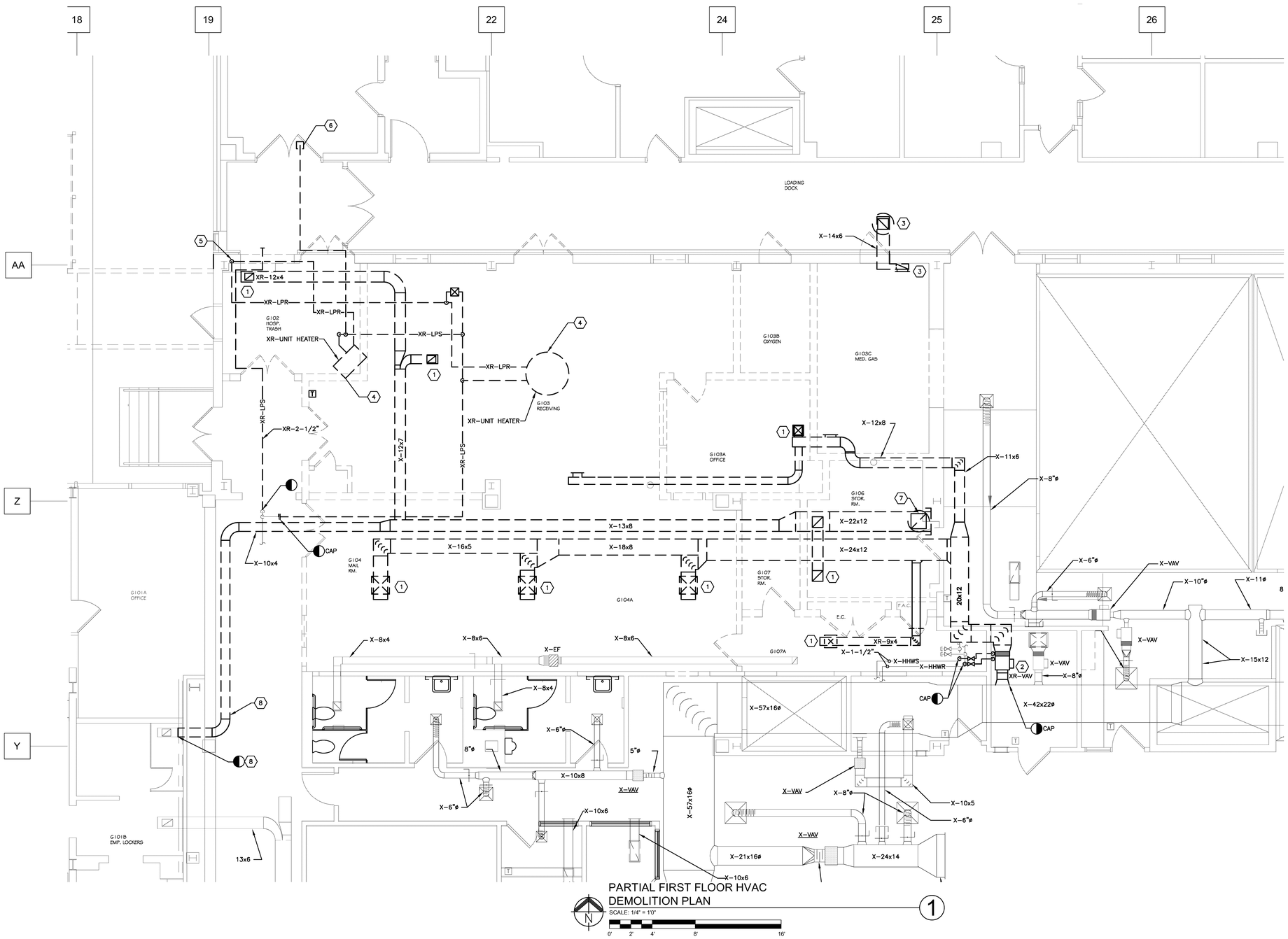

PARTIAL FIRST FLOOR HVAC DEMOLITION PLAN

SCALE: 1/4" = 1'0"

1

GENERAL NOTES:

A. REFER TO ARCHITECTURAL PLANS AND SPECIFICATIONS FOR ROOFING REQUIREMENTS.

CODED NOTES:

1. REMOVE EXISTING DIFFUSER/GRILLE AND ASSOCIATED DUCTWORK BACK TO POINT INDICATED.
2. REMOVE EXISTING TERMINAL UNIT COMPLETE WITH CONTROLS, SUPPORTS, ETC. REMOVE ASSOCIATED DUCTWORK BACK TO POINT INDICATED.
3. REMOVE EXISTING GRILLE, DUCTWORK, AND EXHAUST FAN COMPLETE. PATCH ROOF AS REQURIED.
4. REMOVE EXISTING UNIT HEATER COMPLETE WITH ASSOCIATED CONTROLS, HANGERS, ETC. REMOVE EXISTING STEAM PIPING AND STEAM CONDENSATE RETURN PIPING BACK TO POINT INDICATED AND CAP.
5. REMOVE STEAM CONDENSATE PIPING BACK BELOW FLOOR AND CAP.
6. EXISTING CAPPED 1/2" STEAM LINE. REMOVE PIPING BACK TO POINT INDICATED.
7. REMOVE EXISTING ROOF MOUNTED EXHAUST FAN AND ASSOCIATED DUCTWORK THROUGH ROOF. PATCH ROOF AS REQUIRED.
8. REMOVE EXISTING EXHAUST DUCT SERVING LOCKER ROOM. WORK OCCURS OUTSIDE OF PROJECT SCOPE BOUNDARY. COORDINATE SCHEDULING OF WORK WITH VA COTR. WORK SHALL BE PERFORMED DURING UNOCCUPIED HOURS. REMOVE AND REPLACE CEILING AS NECESSARY TO COMPLETE WORK. REFER TO 1-H4 FOR NEW DUCTWORK SERVING LOCKERS. COORDINATE DUCTWORK DEMOLITION AND NEW WORK TO MINIMIZE EXHAUST DOWNTIME FOR LOCKER ROOMS.

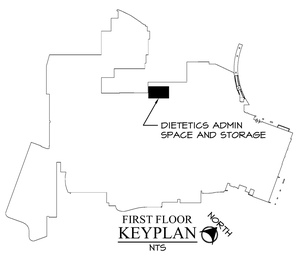

FIRST FLOOR KEYPLAN
NTS

FOR CONSTRUCTION

FULLY SPRINKLERED

Revisions:	Date
FINAL CD SUBMISSION - FOR CONSTRUCTION	07-11-12

CONSULTANTS:

STATE OF OHIO
BRIAN M. WIDOWSKI
E-66625
REGISTERED PROFESSIONAL ENGINEER
12026

ARCHITECT/ENGINEERS:

MAKOVICH & PUSTI ARCHITECTS, INC.
111 FRONT STREET BEREA, OHIO 44017
(440) 891-9910 p (440) 891-0086 f

FREDRICK, FREDRICK & HELLER ENGINEERS, INC.
677 EAST RIVALTON ROAD
BROADVIEW HTS., OHIO 44147
TEL (440) 546-9930
FAX (440) 546-9939

Drawing Title: PARTIAL FIRST FLOOR HVAC DEMOLITION PLAN

Approved: Project Director

Project Title: VAMC WADE PARK CLEVELAND DIETETICS ADMIN SPACE AND STORAGE

Location: 10701 EAST BLVD, CLEVELAND, OHIO 44106

Date	Checked By	Drawn By
07-11-12	BMW	RPH

Project Number: 541-12-113

Building Number: 1

Drawing Number: 1-H3

Office of Construction and Facilities Management

Department of Veterans Affairs

VA FORM 08-6231

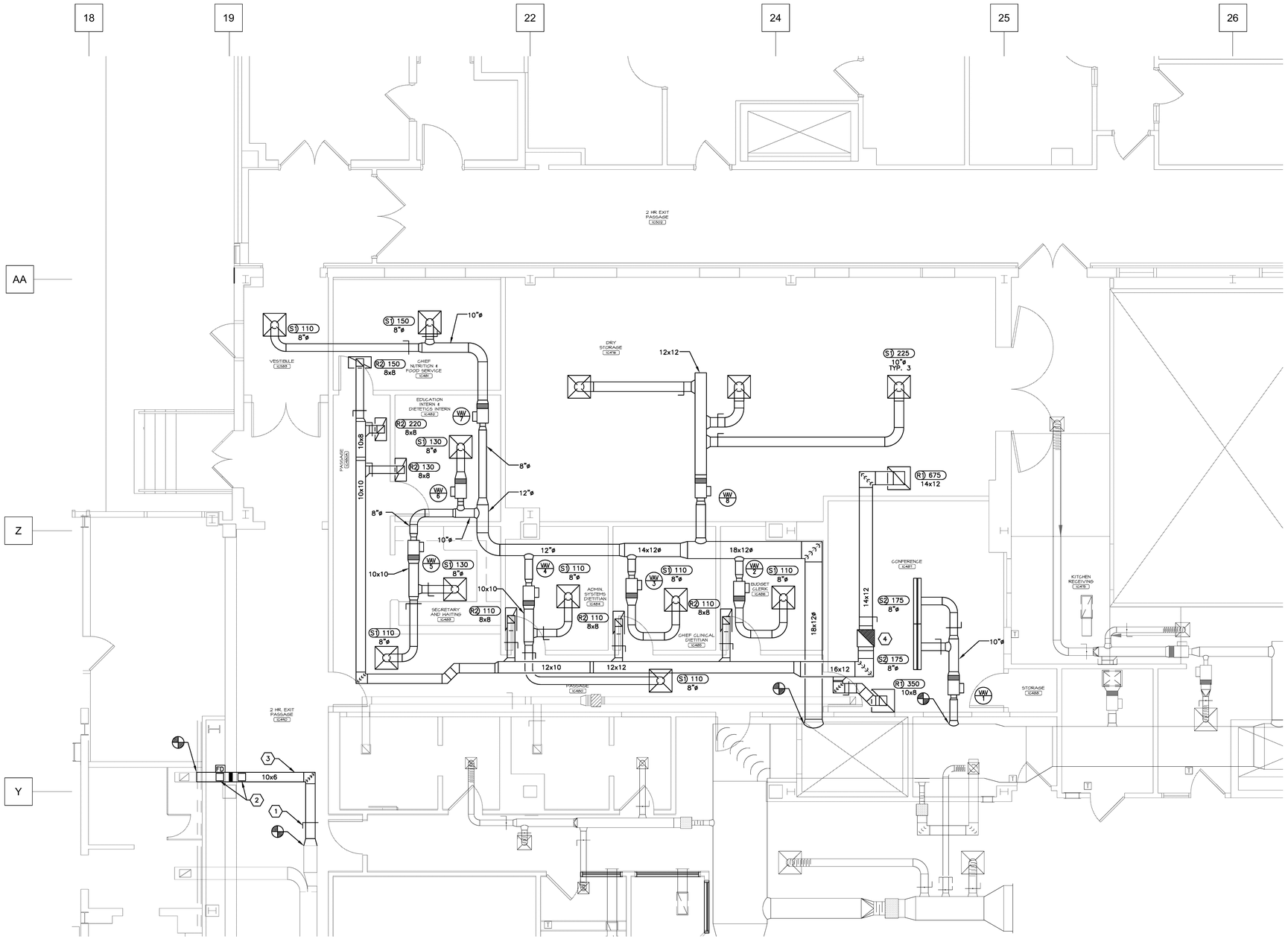

PARTIAL FIRST FLOOR HVAC DUCTWORK PLAN

SCALE: 1/4" = 1'0"

1

GENERAL NOTES:

A. REFER TO ARCHITECTURAL PLANS AND SPECIFICATIONS FOR ROOFING REQUIREMENTS.

B. CONTRACTOR SHALL FIRESTOP ALL PENETRATIONS OF FIRE RATED WALL FOR NEW AND EXISTING HVAC SYSTEMS. REFER TO ARCHITECTURAL LIFE SAFETY PLAN FOR FIRE RATED WALLS.

CODED NOTES:

1. BALANCE TO 100 CFM.
2. PROVIDE DUCT ACCESS DOOR UPSTREAM AND DOWNSTREAM OF FIRE DAMPER.
3. NEW 10x6 EXHAUST DUCT OCCURS OUTSIDE OF PROJECT SCOPE BOUNDARY. COORDINATE SCHEDULING OF WORK WITH VA COTR. WORK SHALL BE PERFORMED DURING UNOCCUPIED HOURS. REMOVE AND REPLACE CEILING AS NECESSARY TO COMPLETE WORK. COORDINATE DUCTWORK DEMOLITION AND NEW WORK TO MINIMIZE EXHAUST DOWNTIME TO EMPLOYEE LOCKERS.
4. 18x18 RETURN DUCT UP TO ROOF. CUT AND PATCH ROOF FOR PENETRATIONS. PROVIDE ROOF CURB AT PENETRATION – REFER TO DETAIL.

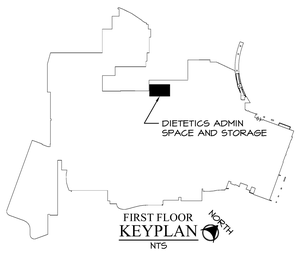

FOR CONSTRUCTION

FULLY SPRINKLERED

Revisions:	Date
FINAL CD SUBMISSION - FOR CONSTRUCTION	07-11-12

CONSULTANTS:

STATE OF OHIO BRIAN M. WIDOWSKI E-66625 REGISTERED PROFESSIONAL ENGINEER 12026

ARCHITECT/ENGINEERS:

MAKOVICH & PUSTI ARCHITECTS, INC.
111 FRONT STREET BEREA, OHIO 44017
(440) 891-9910 p (440) 891-0086 f

FREDRICK, FREDRICK & HELLER ENGINEERS, INC.
677 EAST BOYALTON ROAD
BROADVIEW HTS., OHIO 44147
TEL (440) 546-9696
FAX (440) 546-9699

Drawing Title	PARTIAL FIRST FLOOR HVAC DUCTWORK NEW PLAN
Approved: Project Director	
Project Title	VAMC WADE PARK CLEVELAND DIETETICS ADMIN SPACE AND STORAGE
Location	10701 EAST BLVD, CLEVELAND, OHIO 44106
Date	07-11-12
Checked By	BMW
Drawn By	RPH
Project Number	541-12-113
Building Number	1
Drawing Number	1-H4

Office of Construction and Facilities Management

Department of Veterans Affairs

VA FORM 08-6231

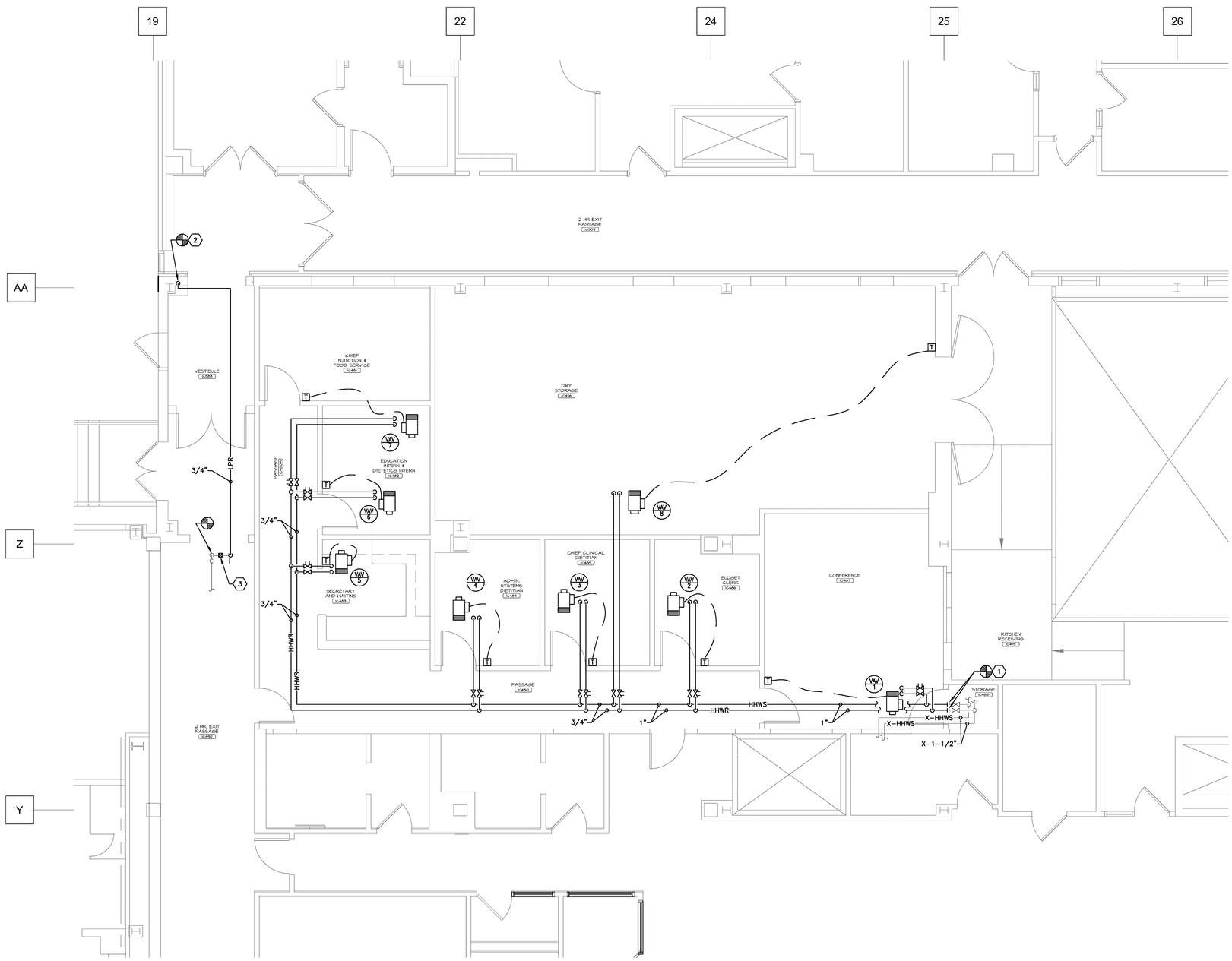

PARTIAL FIRST FLOOR HVAC PIPING PLAN

SCALE: 1/4" = 1'0"

1

CODED NOTES:

1. CONNECT NEW 1-1/4" HEATING HOT WATER SUPPLY AND RETURN TO EXISTING 1-1/4" HEATING HOT WATER SUPPLY AND RETURN LINES.
2. NEW 3/4" LPR DOWN IN CHASE. CONNECT TO EXISTING LPR IN BASEMENT CEILING. CONTRACTOR SHALL REMOVE AND REPLACE EXISTING CEILINGS IN BASEMENT AS NEEDED TO COMPLETE WORK. WORK IN BASEMENT LEVEL SHALL BE PERFORMED DURING NORMALLY UNOCCUPIED HOURS. COORDINATE WORK WITH VA COTR.
3. NEW 3/4" FLOAT AND THERMOSTATIC TRAP ASSEMBLY.

GENERAL NOTES:

G1. MINIMUM PIPE SIZE FOR HEATING HOT WATER SUPPLY AND RETURN SHALL BE 3/4". REFER TO VAV SCHEDULE FOR BRANCH PIPE SIZES TO INDIVIDUAL TERMINALS.

G2. CONTRACTOR SHALL FIRESTOP ALL PENETRATIONS OF FIRE RATED WALL FOR NEW AND EXISTING HVAC SYSTEMS. REFER TO ARCHITECTURAL LIFE SAFETY PLAN FOR FIRE RATED WALLS.

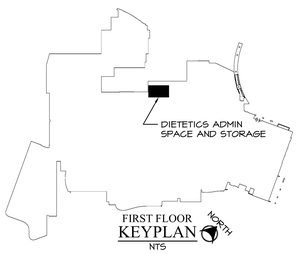

FOR CONSTRUCTION

FULLY SPRINKLERED

Revisions:	Date
FINAL CD SUBMISSION - FOR CONSTRUCTION	07-11-12

CONSULTANTS:

STATE OF OHIO — BRIAN A. WIDOWSKI E-66625 — REGISTERED PROFESSIONAL ENGINEER — 12026

ARCHITECT/ENGINEERS:

MAKOVICH & PUSTI ARCHITECTS, INC.
111 FRONT STREET BEREA, OHIO 44017
(440) 891-0010 p (440) 891-0006 f

FREDRICK, FREDRICK & HELLER ENGINEERS, INC.
673 EAST ROYALTON ROAD
BROADVIEW HTS., OHIO 44147
TEL (440) 546-8686
FAX (440) 546-8688

Drawing Title	PARTIAL FIRST FLOOR HVAC PIPING NEW PLAN
Approved: Project Director	
Project Title	VAMC WADE PARK CLEVELAND DIETETICS ADMIN SPACE AND STORAGE
Location	10701 EAST BLVD, CLEVELAND, OHIO 44106
Date	07-11-12
Checked By	BMW
Drawn By	RPH
Project Number	541-12-113
Building Number	1
Drawing Number	1-H5

Office of Construction and Facilities Management

Department of Veterans Affairs

VA FORM 08-6231

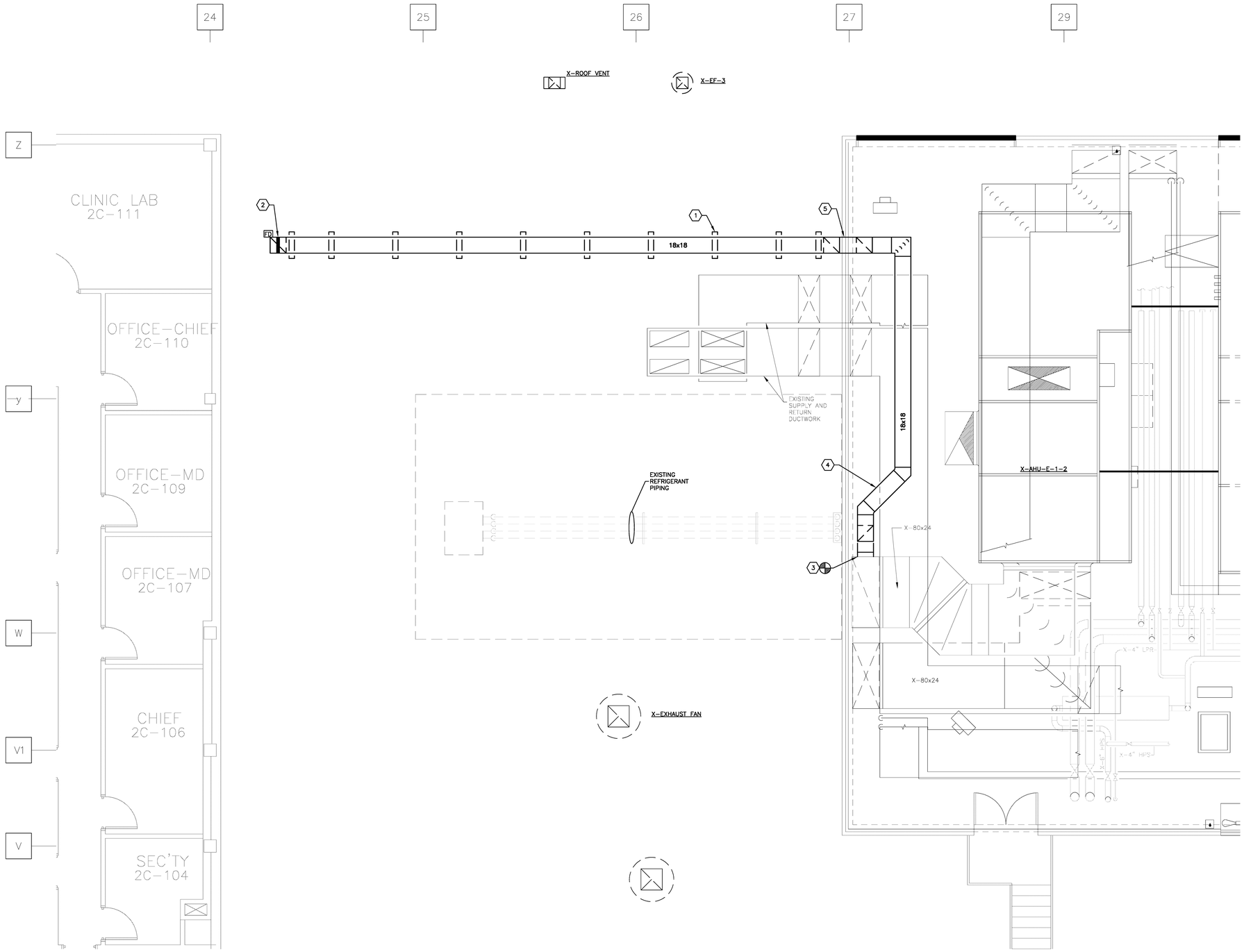

PARTIAL SECOND FLOOR/ROOF HVAC DUCTWORK PLAN (1)

SCALE: 1/4" = 1'0"

0' 2' 4' 8' 16'

ROOFING NOTE:

MC SHALL BE RESPONSIBLE FOR COORDINATING ALL ROOF WORK WITH THE GC. USE MANUFACTURER-APPROVED METHODS AND MATERIALS TO PATCH OPENINGS IN ORDER TO MAINTAIN EXISTING ROOFING SYSTEM WARRANTY. NOTIFY WARRANTORS BEFORE ROOF WORK COMMENCES. UPON COMPLETION, CONTRACTOR SHALL OBTAIN DOCUMENTATION FROM WARRANTOR VERIFYING THAT INTEGRITY OF ROOFING SYSTEM AND WARRANTY HAVE BEEN MAINTAINED. REFER TO ARCHITECTURAL PLANS AND SPECIFICATIONS FOR ROOFING REQUIREMENTS.

CODED NOTES:

1. ROOF DUCTWORK/EQUIPMENT SUPPORT RAIL, TYPICAL. PROVIDE AT EVERY 6'-0" ON CENTER AND AT EACH CHANGE IN DIRECTION. REFER TO DETAIL.
2. PROVIDE ROOF PENETRATION CURB FOR DUCT PENETRATING ROOF. REFER TO DETAIL. PROVIDE FIRE DAMPER AT ROOF PENETRATION WITH ACCESS DOORS ON ROOF AND IN FIRST FLOOR CEILING SPACE.
3. CONNECT NEW 18x18 RETURN DUCT TO EXISTING 80x24 RETURN DUCT AT APPROXIMATELY 14' - 0" ABOVE FINISHED MECHANICAL ROOM FLOOR.
4. NEW 18x18 AT APPROXIMATELY 18' - 6" BOTTOM OF DUCT ABOVE FINISHED MECHANICAL ROOM FLOOR. ROUTE OVERTOP OF EXISTING STACKED SUPPLY AND RETURN DUCT MAINS.
5. PENETRATE WEST WALL OF PENTHOUSE ALONGSIDE EXISTING DUCT MAINS, BOTTOM OF DUCT APPROXIMATELY 12' - 0" ABOVE MECHANICAL ROOM FLOOR.

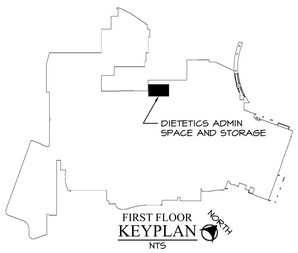

FIRST FLOOR KEYPLAN
NTS

FOR CONSTRUCTION

FULLY SPRINKLERED

Revisions:	Date
FINAL CD SUBMISSION - FOR CONSTRUCTION	07-11-12

CONSULTANTS:

STATE OF OHIO
BRIAN D. WIDOWSKI
E-66625
REGISTERED PROFESSIONAL ENGINEER
12026

ARCHITECT/ENGINEERS:

MAKOVICH & PUSTI ARCHITECTS, INC.
111 FRONT STREET BEREA, OHIO 44017
(440) 891-9919 p (440) 891-0066 f

FREDRICK, FREDRICK & HELLER ENGINEERS, INC.
677 EAST BOYALTON ROAD
BROADVIEW HTS., OHIO 44147
TEL (440) 546-3600
FAX (440) 546-3630

Drawing Title	PARTIAL SECOND FLOOR/ROOF HVAC DUCTWORK NEW PLAN
Approved: Project Director	
Project Title	VAMC WADE PARK CLEVELAND DIETETICS ADMIN SPACE AND STORAGE
Location	10701 EAST BLVD, CLEVELAND, OHIO 44106
Date	07-11-12
Checked By	BMW
Drawn By	RPH
Project Number	541-12-113
Building Number	1
Drawing Number	1-H6

Office of Construction and Facilities Management

Department of Veterans Affairs

VA FORM 08-6231

LIGHTING FIXTURES

3 a — FLUORESCENT LIGHTING FIXTURE CONNECTED TO NORMAL CIRCUIT AS INDICATED – TYPE AS SPECIFIED IN SCHEDULE. "A" INDICATES TYPE, "3" INDICATES CIRCUIT NUMBER ASSIGNMENT, "a" INDICATES LOCAL SWITCHING CONTROL. CONNECT FIXTURES SO THAT ALL LAMPS ARE CONTROLLED BY $.

3 a,b — FLUORESCENT LIGHTING FIXTURE CONNECTED TO NORMAL CIRCUIT – TYPE AS SPECIFIED IN SCHEDULE, "A" INDICATES TYPE, "3" INDICATES CIRCUIT NUMBER ASSIGNMENT. CONNECT FIXTURES SO THAT MIDDLE LAMP(S) IS CONTROLLED BY $. AND OUTER LAMPS ARE CONTROLLED BY $. AS INDICATED BY "a,b"

3 — FLUORESCENT LIGHTING FIXTURE CONNECTED TO EMERGENCY LIFE SAFETY – TYPE AS SPECIFIED IN SCHEDULE, "A" INDICATES TYPE, "3" INDICATES EMERGENCY LIFE SAFETY CIRCUIT NUMBER ASSIGNMENT.

LED OR COMPACT FLUORESCENT LIGHTING FIXTURE, CONNECTED TO NORMAL CIRCUIT – TYPE AS SPECIFIED IN SCHEDULE.

LED OR COMPACT FLUORESCENT LIGHTING FIXTURE, CONNECT TO EMERGENCY CIRCUIT – TYPE AS SPECIFIED IN SCHEDULE.

EXIT SIGN – CONNECT TO EMERGENCY LIFE SAFETY CIRCUIT AHEAD OF LOCAL SWITCHING. TYPE AS SPECIFIED IN SCHEDULE.

EMERGENCY BATTERY LIGHTING FIXTURE – CONNECT TO EMERGENCY LIFE SAFETY CIRCUIT AHEAD OF LOCAL SWITCHING. TYPE AS SPECIFIED IN SCHEDULE.

LIGHTING CONTROLS

$ — 20A–1P–120/277V WALL SWITCH MOUNTED AT 48" AFF UNLESS OTHERWISE NOTED.

$3 — 20A–3WAY–120/277V WALL SWITCH MOUNTED AT 48" AFF UNLESS OTHERWISE NOTED.

$D — 120/277V, 8A SINGLE POLE/3–WAY PRESET LARGE PADDLE SWITCH WITH SMALL DIMMER SLIDER, AUTOMATICALLY RETURNS TO PRESET LEVEL, ENGRAVING LABEL, SLIDE ADJUSTER – MOUNTED AT 48" AFF UNLESS OTHERWISE NOTED.

OS — OCCUPANCY/VACANCY SENSOR – PROVIDE COMPLETE OCCUPANCY SENSOR SYSTEM INCLUDING SENSOR, POWER SUPPLY AND RELAY UNIT. REFER TO "OCCUPANCY SENSOR PROGRAM SCHEDULE" AND "OCCUPANCY SENSOR SYSTEM SPECIFICATIONS" FOR ADDITIONAL INFORMATION.

SENSOR DESIGNATIONS
U – ULTRASONIC TYPE SENSOR
R – INFRARED TYPE SENSOR
D – DUAL TECHNOLOGY TYPE SENSOR

RELAY DESIGNATIONS
– PROVIDE RELAY WITH NORMALLY OPEN (N.O.) CONTACT(S), # DENOTES THE QUANTITY OF N.O. RELAYS. IF BLANK, PROVIDE (1) N.O. RELAYS.
H – PROVIDE FORM C RELAY IN RELAY UNIT FOR HVAC SWITCHING

OTHER DESIGNATIONS
S – "SPECIAL COVERAGE", TWO SIDED, 90 LINEAR FT. COVERAGE

EXAMPLES:

OS U2 — ULTRASONIC SENSOR WITH (2) N.O. CONTACTS

OS DH — DUAL TECHNOLOGY SENSOR WITH (1) N.O. CONTACT AND (1) FORM C RELAY

LIGHTING CONTROLS SYSTEM GENERAL NOTES:

1. ALL COMPONENTS FOR OCCUPANCY AND DAYLIGHT HARVESTING SYSTEM SHALL BE FROM A SINGLE MANUFACTURER AND UL LABELED.
2. SENSORS (OCCUPANCY/VACANCY, DAYLIGHT HARVESTING, ETC.) MAY BE STAND ALONE, COMBINATION, OR INTEGRATED WITH LIGHTING FIXTURES.
3. PROVIDE ALL ADDITIONAL COMPONENTS NECESSARY FOR COMPLETE SYSTEM PER MANUFACTURER'S REQUIREMENTS.
4. SUBMIT WIRING DIAGRAMS SHOWING COMPLETE LIGHTING CONTROLS CONNECTIONS TO ENGINEER FOR REVIEW WITH SHOP DRAWINGS.

WIRING DEVICES

20A–125V, HOSPITAL GRADE, GROUNDED SINGLE RECEPTACLE, MOUNT AT 18" AFF UNLESS OTHERWISE NOTED.

20A–125V, HOSPITAL GRADE, GROUNDED DUPLEX RECEPTACLE, MOUNT AT 18" AFF UNLESS OTHERWISE NOTED.

20A–125V, HOSPITAL GRADE, GROUNDED DUPLEX RECEPTACLE, CEILING MOUNT.

TR — 20A–125V, HOSPITAL GRADE, GROUNDED TAMPER RESISTANT RECEPTACLE, MOUNT AT 18" AFF UNLESS OTHERWISE NOTED.

DOUBLE 20A–125V, HOSPITAL GRADE, GROUNDED DUPLEX RECEPTACLE, MOUNT AT 18" AFF UNLESS OTHERWISE NOTED.

20A–125V, HOSPITAL GRADE, GROUND FAULT INTERRUPTER RECEPTACLE, MOUNT AT 18" AFF UNLESS OTHERWISE NOTED.

TR — SAME DEVICE TYPES AS INDICATED ABOVE EXCEPT CONNECTED TO EMERGENCY CRITICAL CIRCUIT.

POWER CONNECTION WALL BOX FOR PRE–WIRED FURNITURE – 4" SQ. JUNCTION BOX MOUNTED AT 18" AFF FOR CONNECTION TO FURNITURE. PROVIDE WIRING AS INDICATED ON PLANS TO PRE–WIRED FURNITURE WITH "4 CIRCUIT 8 WIRES" CONFIGURATION. EC SHALL VERIFY THE NUMBER OF CIRCUITS AND WIRING CONFIGURATION OF PRE–WIRED FURNITURE FURNISHED BY OWNER PRIOR TO ROUGH–IN. CONTRACTOR SHALL MAKE FINAL CONNECTION TO FURNITURE. ALL CIRCUITS WITH SHARED NEUTRAL FOR PRE–WIRED FURNITURE CONNECTION SHALL BE TIED SO THAT BREAKERS TRIP TOGETHER.

POWER INTERCONNECTION OF PRE–WIRED FURNITURE – REPRESENTS PHYSICAL CONNECTION BETWEEN PRE–WIRED FURNITURE WORKSTATION TO BE CONNECTED BY CONTRACTOR.

FB — RECESSED METALLIC MULTI–SERVICE FLOOR BOX, 10"L x 10"W x 4"DEEP – INSTALLED IN CONCRETE FLOOR WITH (2)DUPLEX RECEPTACLE AND (1)TELEPHONE/DATA OUTLET – POWER AND COMMUNICATIONS CABLING SHALL BE ROUTED IN SEPARATE CONDUITS. FLOOR BOX SHALL BE FURNISHED WITH REMOVABLE NONMETALLIC CHAMBER PLUGS, FLUSH COVER AND CARPET FLANGE. BLANKS FOR UNUSED CHAMBERS AND SHALL BE FULLY ADJUSTABLE. CONTRACTOR SHALL VERIFY THAT DEPTH OF EXISTING CONCRETE FLOOR THICKNESS MEETS INSTALLATION REQUIREMENTS OF THE FLOOR BOX.

MOTOR AND MOTOR CONTROLLERS (FLOOR PLAN VIEW)

COMBINATION FUSED MAGNETIC MOTOR STARTER COMPLETE WITH "HAND–OFF–AUTO" SELECTOR SWITCH AND RED "RUN" PILOT LIGHT IN COVER. NEMA SIZE 0 CONTACTS AND NEMA 1 ENCLOSURE MINIMUM UNLESS OTHERWISE NOTED.

VSD — VARIABLE SPEED MOTOR CONTROLLER – (REFER TO SPECIFICATIONS SECTION 262911).

$T — 120V–1ø OR 277V–1ø (AS REQUIRED) MANUAL MOTOR STARTER WITH INTEGRAL OVERLOAD PROTECTION

$THOA — 120V–1ø OR 277V–1ø (AS REQUIRED) MOTOR STARTER COMPLETE WITH INTEGRAL OVERLOAD PROTECTION AND "HAND–OFF–AUTO" SELECTOR SWITCH.

$ML — 120V–1ø OR 277V–1ø (AS REQUIRED) LOCKABLE MANUAL SWITCH (NO THERMAL OVERLOADS).

CONTROLLER FURNISHED WITH EQUIPMENT.

FIRE ALARM SYSTEM LEGEND

FACP — FIRE ALARM CONTROL PANEL (EXISTING NOTIFIER 3030 SYSTEM).

FARA — FIRE ALARM REMOTE ANNUNCIATOR – FLUSH MOUNT AT 5'–0" AFF TO TOP OF DEVICE.

FPS — FIRE ALARM POWER SUPPLY EXTENDER – CONNECT TO 120V LIFE SAFETY CIRCUIT. SURFACE MOUNT AT 5'–0" AFF TO TOP OF DEVICE.

FATC — FIRE ALARM TERMINAL CABINET.

NACX — NOTIFICATION APPLIANCE CIRCUIT EXTENDER

F — MANUAL FIRE ALARM PULL STATION – MOUNT AT 48" AFF TO CENTERLINE OF DEVICE.

F — FIRE ALARM AUDIBLE VISUAL SIGNAL DEVICE (ADA TYPE) MOUNTED 80" AFF UNLESS NOTED. WHITE HOUSING WITH RED "FIRE" LETTERING.
SUFFIX DENOTES:
S – SPEAKER
D – FLASHING DOME LIGHT
C – COMBINATION SPEAKER WITH FLASHING DOME LIGHT

F S — SMOKE DETECTOR – ADDRESSABLE INTELLIGENT PHOTOELECTRIC TYPE – CEILING MOUNTED.

F SD — DUCT DETECTOR – ADDRESSABLE INTELLIGENT PHOTOELECTRIC DETECTOR, SAMPLING TUBES AND PROGRAMMABLE RELAY BASE. PROVIDE DUCT DETECTOR TEST/RESET SWITCH $RT WITH REMOTE INDICATOR LAMP FOR EACH DUCT DETECTOR.

MAGNETIC TYPE DOOR HOLDER OUTLET. 24VDC

D — PNEUMATICALLY ACTUATED COMBINATION SMOKE/FIRE DAMPER – FURNISHED AND INSTALLED BY THE MC. EC SHALL PROVIDE (1) CONTROL MODULE AND (1) MONITOR MODULE

U I — CONTROL MODULE – ADDRESSABLE RELAY FOR CONTROL OF SMOKE DAMPERS, ELEVATOR RECALL, MAGNETIC DOOR HOLDERS, AUTOMATIC DOORS, ETC.

U C — MONITOR MODULE – ADDRESSABLE SUPERVISED FOR MONITORING TAMPER SWITCH, FLOW SWITCH, DAMPER POSITION ETC.

TS — TAMPER SWITCH – MECHANICAL CONTRACTOR SHALL FURNISH AND INSTALL TAMPER SWITCH. ELECTRICAL CONTRACTOR SHALL PROVIDE MONITOR MODULE AND TEST SWITCH.

FS — FLOW SWITCH – MECHANICAL CONTRACTOR SHALL FURNISH AND INSTALL FLOW SWITCH. ELECTRICAL CONTRACTOR SHALL PROVIDE MONITOR MODULE AND TEST SWITCH.

FIRE ALARM SYSTEM NOTES:

F1: PROVIDE A 2–GANG MINIMUM SIZE BACKBOX FOR ALL OF THE ABOVE FIRE ALARM DEVICES. ALL FIRE ALARM SYSTEM CONDUCTORS SHALL BE INSTALLED IN 3/4" MINIMUM SIZE COMPLETE CONDUIT SYSTEM WITH COLOR CODED WIRING AS INDICATED ON SHOP DRAWINGS – MAINTAIN HOSPITAL COLOR CODING. ALL NETWORK AND NETWORK CABLES SHALL BE "COMMUNICATION GRADE" TYPE CABLE. FURNISH, INSTALL AND CONNECT ALL FIRE ALARM DEVICES IN ACCORDANCE WITH WIRING DIAGRAMS PREPARED BY SYSTEM VENDOR. EXISTING FIRE ALARM SYSTEM BY NOTIFIER. REFER TO SPECIFICATIONS SECTION 283100 FOR ELECTRICAL REQUIREMENTS.

GENERAL ELECTRICAL INSTALLATION NOTES:

1. ALL MOUNTING HEIGHTS ARE TO CENTER OF DEVICE UNLESS OTHERWISE NOTED.
2. ALL NEW WALL MOUNTED ELECTRICAL DEVICES ARE TO BE INSTALLED FLUSH IN WALL UNLESS OTHERWISE NOTED. ALL ELECTRICAL CONDUIT SHALL BE CONCEALED BEHIND FINISHED WALLS AND ABOVE FINISHED CEILING UNLESS OTHERWISE NOTED. THE COST TO CUT AND PATCH WALLS SHALL BE THE RESPONSIBILITY OF THE TRADE REQUIRING THE CUTTING.
3. CONTRACTOR IS RESPONSIBLE FOR REMOVAL AND REPLACEMENT OF CEILINGS REQUIRED FOR ELECTRICAL WORK. CONTRACTOR SHALL REPLACE ANY DAMAGED CEILING TILES.
4. PRIOR TO INSTALLATION, VERIFY PRECISE LOCATION OF NEW OR RELOCATED WALL OR CEILING MOUNTED DEVICES WITH ARCHITECTURAL ELEVATIONS AND REFLECTED CEILING PLANS.
5. COORDINATE ALL SHUT–DOWNS OF EXISTING ELECTRICAL SYSTEMS WITH OWNER A MINIMUM OF FOURTEEN (14) WORKING DAYS IN ADVANCE. ALL SHUT–DOWNS SHALL OCCUR DURING WEEKENDS OR BETWEEN 8:00PM AND 7:00AM ON WEEKDAYS ("OFF–HOURS"). INCLUDE ALL PREMIUM TIME CHARGES IN BID.
6. ALL NOISE GENERATING OPERATIONS, INCLUDING CUTTING OF CEILINGS, WALLS AND FLOORS, CORING, DRILLING, ETC. SHALL BE SCHEDULED DURING WEEKENDS OR BETWEEN 8:00PM AND 7:00AM ON WEEKDAYS ("OFF–HOURS"). INCLUDE ALL PREMIUM TIME CHARGES IN BID.
7. CONTRACTOR SHALL CONNECT ALL MECHANICAL EQUIPMENT COMPLETE PER MANUFACTURER'S WIRING DIAGRAMS AND INSTRUCTIONS. COORDINATE WITH MECHANICAL CONTRACTOR AND VERIFY LOCATION, VOLTAGE, AMPS, NO. OF WIRES, AND PROTECTION REQUIREMENTS PRIOR TO ROUGH–IN. CONTACT ENGINEER WITH ANY DISCREPANCIES FROM DESIGN DRAWINGS.
8. PROVIDE LIQUID–TIGHT FLEXIBLE METAL CONDUIT FOR FINAL CONNECTION TO MECHANICAL EQUIPMENT OR OTHER EQUIPMENT WHICH MAY PROPAGATE VIBRATION.
9. ALL FLUORESCENT LAMPS THAT WILL NOT BE REUSED SHALL BE DISPOSED OF IN ACCORDANCE WITH EPA STANDARDS, AND WRITTEN EVIDENCE OF PROPER DISPOSAL SHALL BE FURNISHED TO THE OWNER.
10. ALL WORK SHALL BE PERFORMED IN STRICT CONFORMANCE WITH THE PHASING REQUIREMENTS OF THE PROJECT. ALL COSTS ASSOCIATED WITH THESE REQUIREMENTS SHALL BE INCLUDED IN THE BID SUBMITTAL.
11. CONTRACTOR IS RESPONSIBLE FOR PROVIDING TEMPORARY LIGHTING TO ADEQUATELY LIGHT ALL CONSTRUCTION AREAS, TEMPORARILY PARTITIONED AREAS, AND EXIT CORRIDORS MAINTAINED DURING CONSTRUCTION.
12. DEFINITION: "PROVIDE" – FURNISH, INSTALL AND CONNECT COMPLETE.
13. PROJECT AND PHASING SCOPE LINES INDICATE WHERE GENERAL CONSTRUCTION BOUNDERIES OCCUR. ELECTRICAL WORK AND UTILITY TIE–INS MAY OCCUR OUTSIDE OF SCOPE LINES.

POWER DISTRIBUTION EQUIPMENT (FLOOR PLAN VIEW)

208/120V–3ø–4W PANELBOARD UNLESS OTHERWISE NOTED. MOUNT AT 78" AFF TO TOP OF PANEL.

480/277V–3ø–4W PANELBOARD UNLESS OTHERWISE NOTED. MOUNT AT 78" AFF TO TOP OF PANEL.

GENERAL PURPOSE, 3 PHASE DRY–TYPE TRANSFORMER – TYPE AS NOTED ON PLANS.

FUSED DISCONNECT SWITCH – SIZE AND TYPE AS NOTED. PROVIDE CLASS RK1 FUSES UNLESS OTHERWISE NOTED. NEMA 1 ENCLOSURE UNLESS OTHERWISE NOTED.

GB — GROUNDING BUSBAR

WIRING TERMINATIONS

J H — JUNCTION BOX, CEILING OR WALL MOUNTED, 4" SQ. WITH GROUND LUG, UNLESS OTHERWISE NOTED. COORDINATE MOUNTING LOCATION WITH EQUIPMENT.
SC – SINK STATION CONTROLS. CONNECT PER MANUFACTURES WIRING DIAGRAM.
CP – MECHANICAL EQUIPMENT CONTROL PANEL. CONNECT PER MANUFACTURES WIRING DIAGRAM.

AD J — JUNCTION BOX, ABOVE CEILING FOR CONNECTION TO 120V AUTOMATIC DOOR. ELECTRICAL CONTRACTOR SHALL CONNECT AUTOMATIC DOOR INCLUDING PUSH PAD OPERATORS PER MANUFACTURER'S INSTRUCTIONS TO 120V EMERGENCY LIFE SAFETY CIRCUIT. GENERAL CONTRACTOR SHALL FURNISH AND INSTALL AUTOMATIC DOOR.

H — JUNCTION BOX MOUNTED AT 48" AFF FOR CONNECTION TO AUTOMATIC DOOR PUSH PAD DEVICE. PROVIDE 3/4"C TO DOOR CONTROLLER WITH WIRING PER MANUFACTURER'S REQUIREMENTS.

5 — MOTOR – NUMBER DENOTES HORSEPOWER

TCP — TEMPERATURE CONTROL PANEL FURNISHED AND INSTALLED BY OTHERS. EC SHALL PROVIDE 120V CONNECTION (HARDWIRED OR RECEPTACLE, AS REQUIRED).

VAV J — EC SHALL PROVIDE 20A–120V CIRCUIT IN ABOVE FINISHED CEILING MOUNTED JUNCTION BOX FOR VAV TERMINALS. CONNECT ALL VAV'S IN AREA TO CIRCUIT INDICATED. MC SHALL PROVIDE CONTROL TRANSFORMER AND CONTROL WIRING FOR 24VAC VAV TERMINALS. VERIFY LOCATION OF ALL ADJACENT VAV'S WITH MECHANICAL DRAWINGS.

MG J H — MEDICAL GAS ALARM PANEL – CONNECT TO 20A, 120V LIFE SAFETY CIRCUIT, WALL MOUNTED, COORDINATE MOUNTING HEIGHT WITH MC.

BRANCH CIRCUIT WIRING

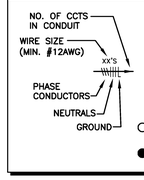

BRANCH CIRCUIT HOME RUN TO PANEL – ARROWHEADS INDICATE CIRCUITS. WIRE INDICATED ARE GREEN GROUND, SEPARATE NEUTRALS (SHARED NEUTRALS ARE NOT PERMITTED FOR BRANCH CIRCUITS) AND THREE HOT LEGS (A DIFFERENT PHASE FOR EACH CIRCUIT) MAXIMUM THREE CIRCUITS PER CONDUIT. 3/4" MINIMUM CONDUIT WITH WIRE SIZE INDICATED ON DRAWING ("XX" INDICATES AWG SIZE). ALL POWER WIRING SHALL BE STRANDED COPPER CONDUCTORS WITH THHN/THWN INSULATION. PROVIDE SEPARATE EQUIPMENT GROUNDING CONDUCTOR (SAME SIZE AS PHASE AND NEUTRAL, UNLESS OTHERWISE NOTED) FOR EACH CONDUIT. CONDUIT WIRE FILLS SHALL BE IN ACCORDANCE WITH LATEST NATIONAL ELECTRIC CODE.

○ CONDUIT UP

● CONDUIT DOWN

FOR CONSTRUCTION

FULLY SPRINKLERED

FINAL CD SUBMISSION - FOR CONSTRUCTION	07-11-12
Revisions:	Date

CONSULTANTS:

STATE OF OHIO — M.P. LONG 59459 — REGISTERED PROFESSIONAL ENGINEER — 12026

ARCHITECT/ENGINEERS:

MAKOVICH & PUSTI ARCHITECTS, INC.
111 FRONT STREET BEREA, OHIO 44017
(440) 893-0910 p (440) 991-0086 f

FREDRICK, FREDRICK & HELLER ENGINEERS, INC.
670 EAST ROYALTON ROAD
BROADVIEW HTS., OHIO 44147
TEL (440) 546-1936
FAX (440) 546-1930

Drawing Title: ELECTRICAL LEGEND	Project Title: VAMC WADE PARK CLEVELAND DIETETICS ADMIN SPACE AND STORAGE		Project Number: 541-12-113
			Building Number: 1
Approved: Project Director	Location: 10701 EAST BLVD, CLEVELAND, OHIO 44106		Drawing Number: 1-E1
	Date: 06-18-12	Checked By: MPL	Drawn By: JDM

Office of Construction and Facilities Management

Department of Veterans Affairs

VA FORM 08-6231

LOW VOLTAGE SYSTEM LEGEND

PAD	PUBLIC ADDRESS DISTRIBUTION – INCLUDES CABINET/RACK, AMPLIFIERS, UPS, INTERFACE PANEL, ETC. PER SPECIFICATIONS .
S a	CEILING MOUNTED PUBLIC ADDRESS SPEAKER – "a" INDICATES LOCAL PAGING SYSTEM SPEAKER VOLUME CONTROL. CONNECT SPEAKERS SO THAT VOLUME IS CONTROLLED BY V a .
S a	WALL MOUNTED PUBLIC ADDRESS SPEAKER – "a" INDICATES LOCAL PAGING SYSTEM SPEAKER VOLUME CONTROL. CONNECT SPEAKERS SO THAT VOLUME IS CONTROLLED BY V a .
V a	PUBLIC ADDRESS SYSTEM VOLUME CONTROL WITH BYPASS RELAY. "a" INDICATES LOCAL PAGING SYSTEM SPEAKER VOLUME CONTROL.
TV TV	MASTER ANTENNA TELEVISION OUTLET (MATV) – CEILING MOUNTED OR WALL MOUNTED AT 12" BFC UNLESS OTHERWISE NOTED. PROVIDE 2 GANG FLUSH BOX WITH 1 GANG RAISED COVER WITH 1" CONDUIT TO ABOVE FINISHED CEILING – STUB AND BUSH. PROVIDE NEW MATV OUTLET TO MATCH EXISTING TYPE AND INSTALL (1) RG-6 COAX CABLE PER OUTLET TO EXISTING NETWORK CABLE TAP. CONNECT EACH CABLE AT OUTLET AND AT NETWORK CABLE TAP. SUPPORT CABLES USING 'J'-HOOKS 3'-0" ON CENTER OR EXISTING CABLE TRAY, WHERE AVAILABLE. TEST COMPLETE INSTALLATION IN ACCORDANCE WITH VA STANDARDS. COORDINATE WORK WITH VA ENGINEERING DEPARTMENT.
	INTERCOM STATION (EXISTING SYSTEM – TOA) – EXTEND EXISTING SYSTEM AS REQUIRED.
A	SECURITY SYSTEM ALARM SIGNAL
MS	SECURITY SYSTEM MOTION SENSOR

LOW VOLTAGE SYSTEM NOTES:

L1. REFER TO TECHNOLOGY DETAILS FOR ADDITIONAL INFORMATION.

L2. REFER TO SPECIFICATIONS FOR ADDITIONAL REQUIREMENTS.

L3. INTERCOM STATIONS SYSTEM EQUIPMENT AND WIRING SHALL BE PROVIDED BY CONTRACTOR. CONTRACTOR SHALL VERIFY ALL BACKBOX SIZES WITH VA COTR AND MANUFACTURER'S INSTALLATION INSTRUCTIONS PRIOR TO ROUGH-IN.

L4. MOUNT DEVICES AT MOUNTING HEIGHTS LISTED ABOVE UNLESS OTHERWISE NOTED ON THE FLOOR PLANS. COORDINATE EXACT MOUNTING LOCATION WITH ARCHITECTURAL ELEVATIONS.

TELECOMMUNICATIONS LEGEND

	TELECOMMUNICATIONS OUTLET "TCO" – MOUNTED AT 18" AFF UNLESS OTHERWISE NOTED. REFER TO TELECOMMUNICATIONS OUTLET DETAILS ON SUBSEQUENT DRAWING FOR REQUIREMENTS.
	PATIENT MONITORING OUTLET – WALL MOUNTED, COORDINATE WITH MONITOR MOUNTING BRACKET. REFER TO PATIENT MONITORING OUTLET DETAILS ON SUBSEQUENT DRAWING FOR REQUIREMENTS.
	TELECOMMUNICATIONS OUTLET "TCO" – CEILING MOUNTED. REFER TO TELECOMMUNICATIONS OUTLET DETAILS ON SUBSEQUENT DRAWING FOR REQUIREMENTS.
W	TELEPHONE OUTLET– MOUNTED AT 48" AFF UNLESS OTHERWISE NOTED.
	TELECOMMUNICATIONS OUTLET "TCO" – ROUGH-IN ONLY (BACKBOX AND CONDUIT STUBBED TO ABOVE FINISHED CEILING).
	WIRELESS ACCESS OUTLET – MOUNTED ABOVE FINISHED CEILING.
12x3	12"W x 3"D (MINIMUM SIZE) CABLE TRAY WIRE MANAGEMENT SYSTEM. MOUNTED ABOVE ACCESSIBLE CEILING. COORDINATE LOCATION WITH OTHER TRADES. MAINTAIN 6" WORKING CLEARANCE ABOVE AND BELOW CABLE TRAY AT ALL LOCATIONS.

TELECOMMUNICATIONS SYSTEM NOTES:

T1. REFER TO TECHNOLOGY DETAILS FOR ADDITIONAL INFORMATION.

T2. REFER TO SPECIFICATIONS FOR ADDITIONAL INFORMATION.

T3. CONTRACTOR SHALL PROVIDE DEVICES, CABLING, TESTING, AND TERMINATIONS. TEST COMPLETE INSTALLATION IN ACCORDANCE WITH VA STANDARDS AND SPECIFICATIONS.

SECURITY SYSTEM LEGEND

SCP	LENEL SECURITY CONTROL PANELS.
CR	CARD READER (HID #6125CKN0007G30L OR EQUAL) – OPERATES MAGNETIC LOCKS, ELECTRIC STRIKES, AUTOMATIC DOOR, ETC. CONTRACTOR SHALL PROVIDE 2-GANG BOX MOUNTED AT 48" AFF. FURNISHED AND CONNECTED BY CONTRACTOR.
EH	ELECTRIC HINGE – 12/24VDC, INCLUDES REQUEST-TO-EXIT OUTPUT CONTACTS, DOOR POSITION SWITCH, AND 4'-0" CABLE. FAILSECURE OPERATING MODE. FURNISHED AND CONNECTED BY CONTRACTOR.
DC	DOOR CONTACTS – MONITORS DOOR POSITION. RECESS MOUNTED AT TOP OF DOOR AND DOOR FRAME. CONTRACTOR SHALL PROVIDE AND CONNECT. CONTRACTOR SHALL FURNISH DOOR PREPARED TO RECEIVE DOOR CONTACTS.
ML	MAGNETIC LOCK – 12/24VDC, MOUNTED AT TOP OF DOOR PER MANUFACTURER'S REQUIREMENTS. CONTRACTOR SHALL PROVIDE ROUGH-IN. FURNISHED AND CONNECTED BY CONTRACTOR.
RE	REQUEST-TO-EXIT – MOTION SENSOR DEVICE OPERATES MAGNETIC LOCKS, ELECTRIC STRIKES, AUTOMATIC DOOR, ETC. MOUNTED AT TOP OF DOOR PER MANUFACTURER'S REQUIREMENTS. FURNISHED AND CONNECTED BY CONTRACTOR.
MS	MOTION SENSOR – OPERATES AUTOMATIC DOOR. MOUNTED AT TOP OF DOOR PER MANUFACTURER'S REQUIREMENTS. FURNISHED AND CONNECTED BY CONTRACTOR.
PB	SECURITY SYSTEM – DURESS-PANIC ALARM PUSHBUTTON – MOUNTED TO UNDERSIDE OF DESK/COUNTER. VERIFY EXACT LOCATION WITH VA POLICE. REFER TO SPECIFICATIONS SECTION 282600. FURNISHED AND CONNECTED BY CONTRACTOR.
KP	KEY PAD – NUMERIC KEYPAD OPERATES MAGNETIC LOCKS, ELECTRIC STRIKES, AUTOMATIC DOOR, ETC. CONTRACTOR SHALL PROVIDE 2-GANG BOX MOUNTED AT 48" AFF. FURNISHED AND CONNECTED BY CONTRACTOR.
	SECURITY CAMERA – FIXED DOME CAMERA – CEILING MOUNTED, WIDE ANGLE, NETWORK-ENABLED, 1280x800 (1MP) MIN. RESOLUTION PER SENSOR, H.264 VIDEO COMPRESSION, 30 FRAMES PER SECOND, TAMPERING ALARM, POWER OVER ETHERNET, PROGRESSIVE SCAN, TAMPER RESISTANT CASING. PROVIDE DROP CEILING MOUNTING ACCESSORIES TO MOUNT DOME FLUSH WITH CEILING.
D1	ACCESS CONTROLLED DOOR TYPE 1 – CONTRACTOR SHALL PROVIDE CARD READER, CONNECT ELECTRIC HINGE, PROVIDE DOOR CONTACTS. REFER TO "ACCESS CONTROLLED DOOR TYPE 1 DETAIL".
D2	ACCESS CONTROLLED DOOR TYPE 2 – CONTRACTOR SHALL PROVIDE CARD READER, CONNECT ELECTRIC HINGE, PROVIDE DOOR CONTACTS. REFER TO "ACCESS CONTROLLED DOOR TYPE 2 DETAIL".

SECURITY SYSTEM NOTES:

S1. PROVIDE MINIMUM SIZE BACKBOX AS REQUIRED FOR ALL OF THE ABOVE SECURITY DEVICES AND INSTALL IN 1/2"C MINIMUM COMPLETE CONDUIT SYSTEM TO JUNCTION BOX ABOVE FINISHED CEILING. REFER TO THE "ACCESS-CONTROLLED DOOR DETAIL" ON THE TECHNOLOGY DETAILS DRAWING FOR ADDITIONAL INFORMATION.

S2. REFER TO SPECIFICATIONS DIVISION 28 FOR FURTHER DETAILS REGARDING THE SECURITY SYSTEM.

S3. MOUNT DEVICES AT MOUNTING HEIGHTS LISTED ABOVE UNLESS OTHERWISE NOTED ON THE FLOOR PLANS. COORDINATE EXACT MOUNTING LOCATION WITH ARCHITECTURAL ELEVATIONS.

S4. SECURITY SYSTEM EQUIPMENT AND WIRING SHALL BE PROVIDED BY CONTRACTOR, UNLESS OTHERWISE NOTED.

S5. CONTRACTOR SHALL VERIFY ALL BACKBOX SIZES WITH VA COTR AND MANUFACTURER'S INSTALLATION INSTRUCTIONS PRIOR TO ROUGH-IN.

S6. FURNISH, INSTALL AND CONNECT ALL SECURITY DEVICES IN ACCORDANCE WITH LENEL SYSTEM PROVIDER. PROVIDE ALL ADDITIONAL LENEL COMPONENTS AS NECESSARY FOR A COMPLETE SYSTEM. SUBMIT ALL LENEL DEVICES WITH SHOP DRAWINGS SUBMITTAL.

ABBREVIATIONS

AC	ABOVE COUNTER AT 9" UNLESS OTHERWISE NOTED	AFC	ABOVE FINISHED CEILING
AF	AMP FRAME	AT	AMP TRIP
AFF	ABOVE FINISHED FLOOR	ATS	AUTOMATIC TRANSFER SWITCH
CM	CEILING MOUNTED	COTR	CONTRACTING OFFICER/TECHICAL REPRESENTATIVE
EC	ELECTRICAL CONTRACTOR	EG	EQUIPMENT GROUND
EOL	END OF LINE	EWC	ELECTRIC WATER COOLER
GC	GENERAL CONTRACTOR	GFCI	GROUND FAULT CIRCUIT INTERRUPTER
IG	ISOLATED GROUND	IRM	INFORMATION RESOURCES MANAGEMENT
MC	MECHANICAL CONTRACTOR	MCB	MAIN CIRCUIT BREAKER
MLO	MAIN LUGS ONLY	NEC	NATIONAL ELECTRICAL CODE
NF	NOT FUSED	SM	SURFACE MOUNTED
TC	TELECOMMUNICATIONS CONTRACTOR	TCC	TEMPERATURE CONTROLS CONTRACTOR
TV	TELEVISION	VSC	VARIABLE SPEED MOTOR CONTROLLER
WP	WEATHERPROOF ENCLOSURE – NEMA 4 TYPE		
X	EXISTING OUTLET, DEVICE, LIGHTING FIXTURE, CONDUIT, ETC. – TO REMAIN		
XB	INDICATES EXISTING OUTLET, LIGHTING FIXTURE, CONDUIT, ETC – TO BE REMOVED. PROVIDE BLANK COVER FOR OUTLET AND MAINTAIN CIRCUIT CONTINUITY.		
XL	NEW LOCATION OF EXISTING OUTLET, DEVICE, LIGHTING FIXTURE, ETC.		
XN	EXISTING OUTLET, DEVICE, LIGHTING FIXTURE, ETC. – TO BE REPLACED WITH NEW OF SPECIFIED TYPE		
XR	EXISTING OUTLET, DEVICE, LIGHTING FIXTURE, CONDUIT, ETC. – TO BE REMOVED COMPLETE– MAINTAIN CIRCUIT CONTINUITY TO ADJACENT OUTLETS, EXTEND CONDUIT AND WIRING AS REQUIRED.		
XRR	EXISTING OUTLET, DEVICE, LIGHTING FIXTURE, ETC. – TO BE REMOVED AND REINSTALLED AT NEW LOCATION – EXTEND CONDUIT AND WIRING AS REQUIRED		
VAMC	VETERANS AFFAIRS MEDICAL CENTER		

GENERAL LEGEND

1	CODED NOTE – "1" INDICATES NOTE NUMBER.
1-SF	MECHANICAL EQUIPMENT IDENTIFIER
1 / 1-E01	DETAIL REFERENCE – "1" INDICATES DETAIL NUMBER, "1-E01" INDICATED DRAWINGS NUMBER.
RR / SA	COLUMN GRID
1	REVISION REFERENCE NUMBER

FOR CONSTRUCTION

FULLY SPRINKLERED

FINAL CD SUBMISSION - FOR CONSTRUCTION	OT-11-12
Revisions:	Date

CONSULTANTS:

STATE OF OHIO M.P. LONG 59459 REGISTERED PROFESSIONAL ENGINEER 12026

ARCHITECT/ENGINEERS:

MAKOVICH & PUSTI ARCHITECTS, INC.
111 FRONT STREET BEREA, OHIO 44017
(440) 891-8910 p (440) 891-0386 f

FREDRICK, FREDRICK & HELLER ENGINEERS, INC.
672 CLIFF MORALDA ROAD
BREAKVIEW HTS., OHIO 44147
TEL (440) 546-9936
FAX (440) 546-9939

Drawing Title: ELECTRICAL LEGEND	Project Title: VAMC WADE PARK CLEVELAND DIETETICS ADMIN SPACE AND STORAGE		Project Number: 541-12-113
			Building Number: 1
Approved: Project Director	Location: 10701 EAST BLVD, CLEVELAND, OHIO 44106		Drawing Number: 1-E2
	Date: 07-11-12	Checked By: MPL / Drawn By: JDM	

Office of Construction and Facilities Management

Department of Veterans Affairs

VA FORM 08-6231

TYPES A, C

TYPES D, E

TYPES B, F

GENERAL NOTES:

G1. PHOTOGRAPHS ARE SHOWN FOR INFORMATION PURPOSES ONLY REGARDING THE STYLE OF THE FIXTURE.

G2. REFER TO LIGHTING FIXTURE SCHEDULE AND SPECIFICATIONS FOR ADDITIONAL INFORMATION.

LIGHTING FIXTURE SCHEDULE

TYPE	DESCRIPTION	MOUNTING	LAMP INFORMATION				BALLAST/DRIVER INFORMATION			NOTES
			QUANTITY	WATTS	TYPE	COLOR TEMP.	QUANTITY	TYPE	VOLTAGE	
A	FLUORESCENT LIGHTING FIXTURE, 2' x 4' x 6" MAX HEIGHT RECESSED, DELIVERS AT LEAST 72% LUMINAIRE EFFICIENCY, FULLY LUMINOUS HOUSING, ROUND EXTRUDED CENTER OPTIC WITH LINEAR PRISMATIC FULLY FROSTED ACRYLIC LENS, LENSES SECURED TO HOUSING FOR EASY LAMP ACCESS, FUSING.	OFFICE	3	25W	T8	3500°K	1	LF BALLAST	120–277V	–
B	FLUORESCENT LIGHTING FIXTURE, 2' x 4' x 4–1/2" MAX HEIGHT RECESSED TROFFER, GASKETED, INVERTED ACRYLIC K–19 LENS (.156" THICKNESS) FOR EASE OF CLEANING, FLAT WHITE ALUMINUM DOOR FRAME, DIE FORMED STEEL RIGID HOUSING, AUXILIARY FIXTURE END SUSPENSION POINTS, FUSING, PAINT AFTER FABRICATION.	PASSAGE	4	25W	T8	3500°K	1	LF BALLAST	120–277V	–
C	FLUORESCENT LIGHTING FIXTURE, 2' x 2' x 6" MAX HEIGHT RECESSED, DELIVERS AT LEAST 72% LUMINAIRE EFFICIENCY, FULLY LUMINOUS HOUSING, ROUND EXTRUDED CENTER OPTIC WITH LINEAR PRISMATIC FULLY FROSTED ACRYLIC LENS, LENSES SECURED TO HOUSING FOR EASY LAMP ACCESS, FUSING.	CORRIDOR	2	17W	T8	3500°K	1	LF BALLAST	120–277V	–
D	LED LIGHTING FIXTURE – 6" DIA. X 6–5/8" MAX HEIGHT WALL–WASH RECESSED DOWNLIGHT, 1500 MINIMUM LUMENS, SEMI–SPECULAR CLEAR REFLECTOR AND WHITE POLYMER TRIM, LED LIGHT BAR AND DRIVER ACCESSIBLE FROM BELOW THROUGH FIXTURE, CONVEX TRANSITIONAL LENS.	CONFERENCE ROOM	1	27W MAX SYSTEM	LED	3500°K	1	DIMMING LED DRIVER	277V	–
E	LED LIGHTING FIXTURE – 6" DIA. X 6–5/8" MAX HEIGHT WALL–WASH RECESSED DOWNLIGHT, 1500 MINIMUM LUMENS, SEMI–SPECULAR CLEAR REFLECTOR AND WHITE POLYMER TRIM, LED LIGHT BAR AND DRIVER ACCESSIBLE FROM BELOW THROUGH FIXTURE, CONVEX TRANSITIONAL LENS.	STORAGE	1	27W MAX SYSTEM	LED	3500°K	1	LED DRIVER	277V	–
F	FLUORESCENT LIGHTING FIXTURE, 2' x 4' x 4–1/2" MAX HEIGHT RECESSED TROFFER, GASKETED, INVERTED ACRYLIC K–19 LENS (.156" THICKNESS) FOR EASE OF CLEANING, FLAT WHITE ALUMINUM DOOR FRAME, DIE FORMED STEEL RIGID HOUSING, AUXILIARY FIXTURE END SUSPENSION POINTS, FUSING, PAINT AFTER FABRICATION.	STORAGE	3	25W	T8	3500°K	1	LF BALLAST	120–277V	–
	EXIT SIGN – LED TYPE, AC ONLY, SINGLE OR DOUBLE FACE, UNIVERSAL MOUNTING, DIE CAST ALUMINUM HOUSING WITH WHITE BODY, WHITE FACE AND RED STENCIL LETTERS. CONNECT TO EMERGENCY LIFE SAFETY CIRCUIT AHEAD OF LOCAL SWITCHING. UL 924 LISTED, UL DAMP LOCATION, UL LISTED FOR 2C.	VARIOUS	–	LESS THAN 2W	LED	3500°K	–	–	120–277V	–

GENERAL LIGHTING INSTALLATION NOTES:

L1. REFER TO ELECTRICAL SPECIFICATIONS FOR FLUORESCENT LAMP COLOR AND BALLAST TYPE.

L2. CONTRACTOR SHALL COORDINATE LIGHTING FIXTURE TYPE (GRID OR FLANGE) WITH ACTUAL CEILING TYPE PRIOR TO ORDERING FIXTURES. CONTACT ENGINEER IF QUESTIONS SHOULD ARISE CONCERNING CEILING TYPES.

L3. CONTRACTOR SHALL VERIFY ALL BALLAST QUANTITIES WITH SWITCHING SHOWN ON PLANS PRIOR TO ORDERING FIXTURES. ADJUST BALLAST QUANTITIES AS REQUIRED TO MATCH SWITCHING.

L4. VERIFY LIGHTING CIRCUIT VOLTAGE (277V–1ø OR 120V–1ø) PRIOR TO ORDERING LIGHTING FIXTURES OR STARTING ROUGH–IN OF BRANCH CIRCUITS. IMMEDIATELY CONTACT ENGINEER WITH ANY DISCREPANCIES. CONTRACTOR IS RESPONSIBLE FOR ORDERING THE PROPER VOLTAGE FOR LIGHTING FIXTURES, REGARDLESS OF VOLTAGE SHOWN ON LIGHTING FIXTURE SCHEDULE.

L5. CONTRACTOR SHALL VERIFY ALL FIXTURES TO BE CONTROLLED BY DIMMER SWITCHES AS SHOWN ON PLANS PRIOR TO ORDERING FIXTURES. PROVIDE ARCHITECTURAL DIMMING BALLASTS (FLUORESCENT) OR DRIVER (LED) WITH DIMMING RANGE FROM AS SHOWN TABLE ABOVE, AND COMPATIBLE DIMMER CONTROLS WHERE DIMMING IS INDICATED ON PLANS.

L6. PROVIDE 100 HOURS BURN–IN TIME AT FULL BRIGHTNESS FOR ALL LAMPS IN DIMMED FLUORESCENT LIGHTING FIXTURES.

L7. PROVIDE DISCONNECTING MEANS FOR ALL FLUORESCENT FIXTURES THAT UTILIZE DOUBLE–ENDED LAMPS AND CONTAIN BALLAST(S) THAT CAN BE SERVICED IN PLACE. THE DISCONNECTING MEANS SHALL BE ACCESSIBLE AND SHALL SIMULTANEOUSLY BREAK ALL THE SUPPLY CONDUCTORS TO THE BALLAST (INCLUDING THE GROUNDED CONDUCTOR).

L8. REFER TO ELECTRICAL SPECIFICATIONS FOR LED COLOR TEMPERATURE AND DRIVER TYPE.

L9. LINEAR FLUORESCENT LAMPS SHALL HAVE A CRI OF 82 OR GREATER.

L10. COMPACT FLUORESCENT LAMPS SHALL HAVE A CRI OF 80 OR GREATER.

L11. SUBMIT LAMP AND BALLAST CUT SHEETS WITH SHOP DRAWINGS FOR REVIEW.

BALLAST/DRIVER ABBREVIATIONS

LF BALLAST – LINEAR FLUORESCENT LAMP BALLAST

CF BALLAST – COMPACT FLUORESCENT LAMP BALLAST

LED DRIVER – LIGHT–EMITTING DIODE DRIVER WITH 100% DOWN TO 10% LOW–VOLTAGE DIMMING

DIMMING LF BALLAST – DIMMING LINEAR FLUORESCENT LAMP BALLAST 100% DOWN TO 5% (OR LOWER) DIMMING

DIMMING ADDRESS LF BALLAST – ADDRESSABLE DIMMING BALLAST 100% DOWN TO 5% (OR LOWER). MUST BE COMPATIBLE WITH OTHER ADVANCE LIGHTING CONTROLS – SEE ELECTRICAL LEGEND FOR ADDITIONAL WORK REQUIREMENTS.

DIMMING CF BALLAST – DIMMING COMPACT FLUORESCENT LAMP BALLAST

DIMMING LED DRIVER – DIMMING LIGHT–EMITTING DIODE DRIVER WITH 100% DOWN TO 1% DIMMING

120–277V – MULTI–VOLTAGE BALLAST DETECTS INCOMING VOLTAGE AND ADAPTS AUTOMATICALLY

FOR CONSTRUCTION

FULLY SPRINKLERED

Revisions:	Date
FINAL CD SUBMISSION - FOR CONSTRUCTION	07-11-12

CONSULTANTS:

STATE OF OHIO M.P. LONG 59459 REGISTERED PROFESSIONAL ENGINEER
12026

ARCHITECT/ENGINEERS:

MAKOVICH & PUSTI ARCHITECTS, INC.
111 FRONT STREET BEREA, OHIO 44017
(440) 893-8910 p (440) 891-0386 f

FREDRICK, FREDRICK & HELLER ENGINEERS, INC.
470 EAST ROYALTON ROAD
BROADVIEW HTS., OHIO 44147
PH. (440) 546-1696
FAX. (440) 546-1699

Drawing Title: LIGHTING FIXTURE SCHEDULE

Approved: Project Director

Project Title: VAMC WADE PARK CLEVELAND DIETETICS ADMIN SPACE AND STORAGE

Location: 10701 EAST BLVD, CLEVELAND, OHIO 44106

Date: 07-11-12 | Checked By: MPL | Drawn By: JDM

Project Number: 541-12-113

Building Number: 1

Drawing Number: 1-E3

Office of Construction and Facilities Management

Department of Veterans Affairs

VA FORM 08–6231

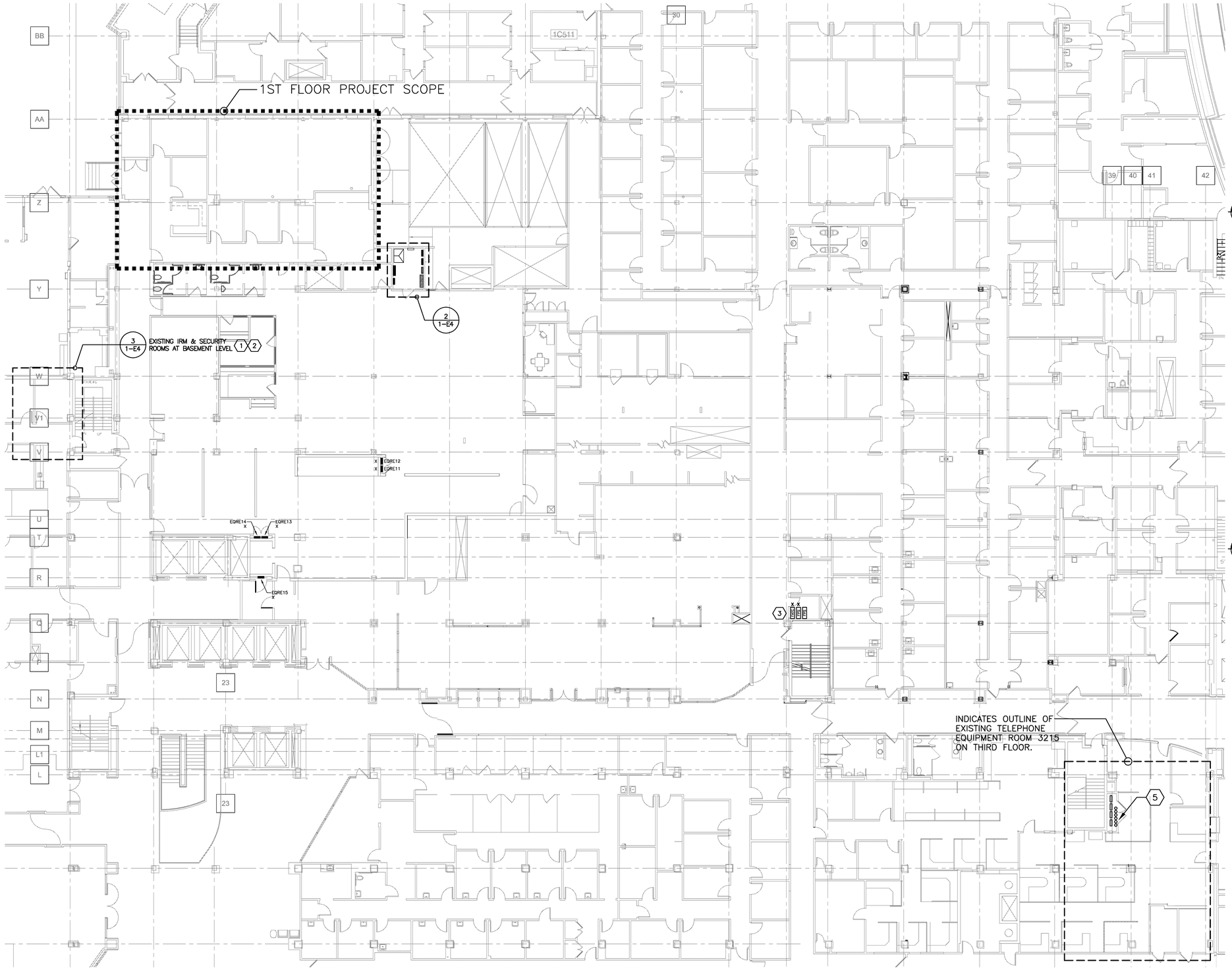

FIRST FLOOR ELECTRICAL KEY PLAN (1)
SCALE: 3/32" = 1'0"

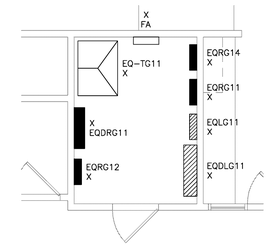

ENLARGED ELECTRICAL ROOM G104E (2)
SCALE: 1/4" = 1'0"

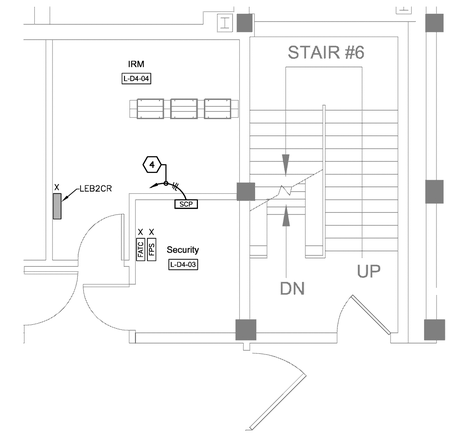

ENLARGED BASEMENT IRM & SECURITY ROOM (3)
SCALE: 1/4" = 1'0"

KEY PLAN CODED NOTES:

1. NEW TELECOMMUNICATION OUTLETS WITHIN THE PROJECT SCOPE AREA SHALL BE TERMINATED BACK TO THE EXISTING IRM ROOMS VIA NEW AND EXISTING CABLE TRAY. NEW CAT6 PATCH PANEL(S) AND 110 BLOCKS SHALL BE PROVIDED TO ACCOMMODATE NEW WORK. REFER TO SUBSEQUENT DRAWINGS FOR ADDITIONAL REQUIREMENTS AND PHASING INFORMATION.
2. NEW SECURITY DEVICES WITHIN THE PROJECT SCOPE AREA SHALL BE CONNECTED BACK TO THE EXISTING IRM ROOMS. CONNECT DEVICES COMPLETE TO NEW LENEL PANELS. REFER TO SUBSEQUENT DRAWINGS FOR ADDITIONAL REQUIREMENTS AND PHASING INFORMATION.
3. CONNECT NEW FIRE ALARM DEVICES TO NOTIFIER 3030 SYSTEM TERMINAL CABINET AND FIRE ALARM POWER SUPPLY. REFER TO FIRE ALARM RISER DETAIL FOR ADDITIONAL REQUIREMENTS.
4. CONNECT NEW LENEL SECURITY PANELS TO SPARE 20A-1P BREAKER IN PANELBOARD 'LEB2CR'. REFER TO SECURITY SYSTEM RISER FOR ADDITIONAL REQUIREMENTS.
5. APPROXIMATE LOCATION OF EXISTING RISER PENETRATIONS INTO TELEPHONE EQUIPMENT ROOM 3215 RAISED FLOOR SPACE. CONTRACTOR SHALL USE EXISTING 4" GRC SLEEVE STUBBED INTO ROOM 3215 RAISED FLOOR SPACE FIRE STOP PENETRATION (TYPICAL OF 6). ROUTE LENEL FIBER CABLES AS DIRECTED PER SECURITY SYSTEM RISER FROM BASEMENT SECURITY ROOM UP TO THIRD FLOOR TELEPHONE EQUIPMENT ROOM 3215 IN APPROVED CABLE SUPPORTS.

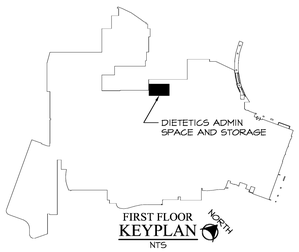

FIRST FLOOR KEYPLAN
NTS

FOR CONSTRUCTION

FULLY SPRINKLERED

FINAL CD SUBMISSION - FOR CONSTRUCTION	07-11-12
Revisions:	Date

CONSULTANTS:

STATE OF OHIO
M.P. LONG
59459
REGISTERED
PROFESSIONAL ENGINEER
12026

ARCHITECT/ENGINEERS:

MAKOVICH & PUSTI ARCHITECTS, INC.
111 FRONT STREET BEREA, OHIO 44017
(440) 891-8910 p (440) 891-0086 f

FREDRICK, FREDRICK & HELLER ENGINEERS, INC.
672 EAST BOYNTON ROAD
BROADVIEW HTS., OHIO 44147
TEL (440) 546-9996
FAX (440) 546-9999

Drawing Title: FIRST FLOOR ELECTRICAL KEY PLAN	Project Title: VAMC WADE PARK CLEVELAND DIETETICS ADMIN SPACE AND STORAGE	Project Number: 541-12-113	Office of Construction and Facilities Management
Approved: Project Director	Location: 10701 EAST BLVD, CLEVELAND, OHIO 44106	Building Number: 1	
	Date: 07-11-12 / Checked By: MPL / Drawn By: JDM	Drawing Number: 1-E4	Department of Veterans Affairs

VA FORM 08-6231

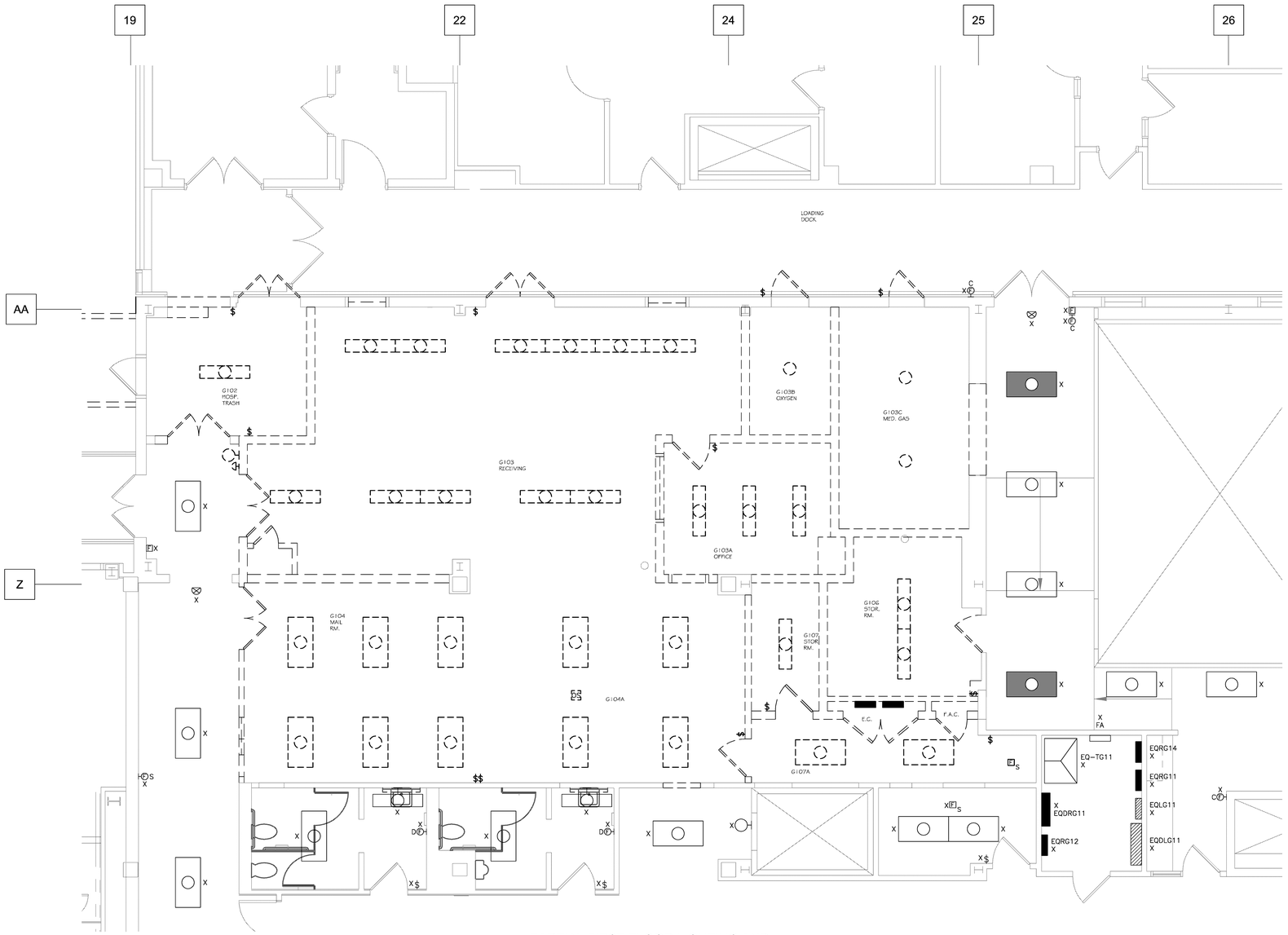

PARTIAL FIRST FLOOR LIGHTING AND FIRE ALARM DEMOLTION PLAN (1)

SCALE: 1/4" = 1'0"

0' 2' 4' 8' 16'

ELECTRICAL DEMOLITION NOTES

D1. ALL EXISTING LIGHTING FIXTURES, RECEPTACLES, SPECIAL SYSTEMS OUTLETS, CONDUIT, WIRING ETC. THAT WILL NOT BE REUSED IN THE REMODELED INSTALLATION SHALL BE REMOVED UNLESS OTHERWISE NOTED. THIS DEMOLITION SHALL INCLUDE ALL ELECTRICAL ITEMS SHOWN ON THIS PLAN THAT ARE NOT DESIGNATED BY "X", "XN" OR "XRR" AND ALL OTHER ADDITIONAL ITEMS THAT ARE NOT SHOWN BUT THAT MUST BE REMOVED IN ORDER TO PRODUCE A NEAT, FINISHED, PROPERLY FUNCTIONING ELECTRICAL INSTALLATION. MAINTAIN CIRCUIT CONTINUITY TO ALL EXISTING REUSED ELECTRICAL SYSTEMS COMPONENTS – PROVIDE ALL CONDUIT AND WIRING NECESSARY TO ACHIEVE THE SAME. THE CONTRACTOR SHALL FIELD VERIFY THE NATURE AND EXTENT OF ALL DEMOLITION WORK AND SHALL INCLUDE COST FOR THE SAME IN THE BID SUBMITTAL.

D2. ALL EXISTING REMOVED ELECTRICAL EQUIPMENT, DEVICES, ETC. THAT ARE NOT RETAINED BY THE OWNER SHALL BE DISPOSED OF BY THE ELECTRICAL CONTRACTOR.

D3. DASHED WALLS ON PLAN INDICATE EXISTING CONSTRUCTION TO BE REMOVED.

D4. REFER TO ELECTRICAL LEGEND FOR ALL SYMBOL DESIGNATIONS. NOTE SPECIAL ATTENTION TO SELECTED EXISTING DEVICES, WIREWAYS, ETC. MARKED XB, XRR OR XN, AND REMOVE/BLANK OFF, RELOCATE OR REPLACE THESE COMPONENTS AS REQUIRED.

D5. MAINTAIN CIRCUIT CONTINUITY TO ALL EXISTING ELECTRICAL SYSTEM COMPONENTS IN AREAS NOT BEING REMODELED UNLESS OTHERWISE NOTED. PROVIDE ALL CONDUIT AND WIRING EXTENSIONS NECESSARY TO ACHIEVE SAME.

D6. THE ELECTRICAL CONTRACTOR SHALL CLOSELY COORDINATE ALL ELECTRICAL DEMOLITION WORK WITH THE GENERAL AND MECHANICAL CONTRACTORS, AND SHALL DISCONNECT ALL REQUIRED CIRCUITS IN A TIMELY MANNER.

D7. CONTACT THE ENGINEER IF A QUESTION SHOULD ARISE CONCERNING THE STATUS OF ANY OUTLET, DEVICE, LIGHTING FIXTURE, ETC.

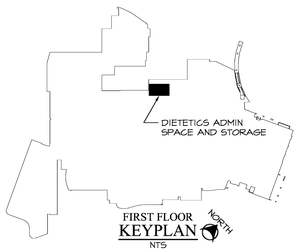

FIRST FLOOR KEYPLAN
NTS

FOR CONSTRUCTION

FULLY SPRINKLERED

Revisions:	Date
FINAL CD SUBMISSION - FOR CONSTRUCTION	07-11-12

CONSULTANTS:

STATE OF OHIO M.P. LONG 59459 REGISTERED PROFESSIONAL ENGINEER 12026

ARCHITECT/ENGINEERS:

MAKOVICH & PUSTI ARCHITECTS, INC.
111 FRONT STREET BEREA, OHIO 44017
(440) 891-8112 p (440) 891-0386 f

FREDRICK, FREDRICK & HELLER ENGINEERS, INC.
672 EAST ROYALTON ROAD
BROADVIEW HTS., OHIO 44147
TEL (440) 546-9696
FAX (440) 546-9699

Drawing Title: PARTIAL FIRST FLOOR LIGHTING AND FIRE ALARM DEMOLITION PLAN

Approved: Project Director

Project Title: VAMC WADE PARK CLEVELAND DIETETICS ADMIN SPACE AND STORAGE

Location: 10701 EAST BLVD, CLEVELAND, OHIO 44106

Date: 07-11-12 | Checked By: MPL | Drawn By: JDM

Project Number: 541-12-113

Building Number: 1

Drawing Number: 1-E5

Office of Construction and Facilities Management

Department of Veterans Affairs

VA FORM 08-6231

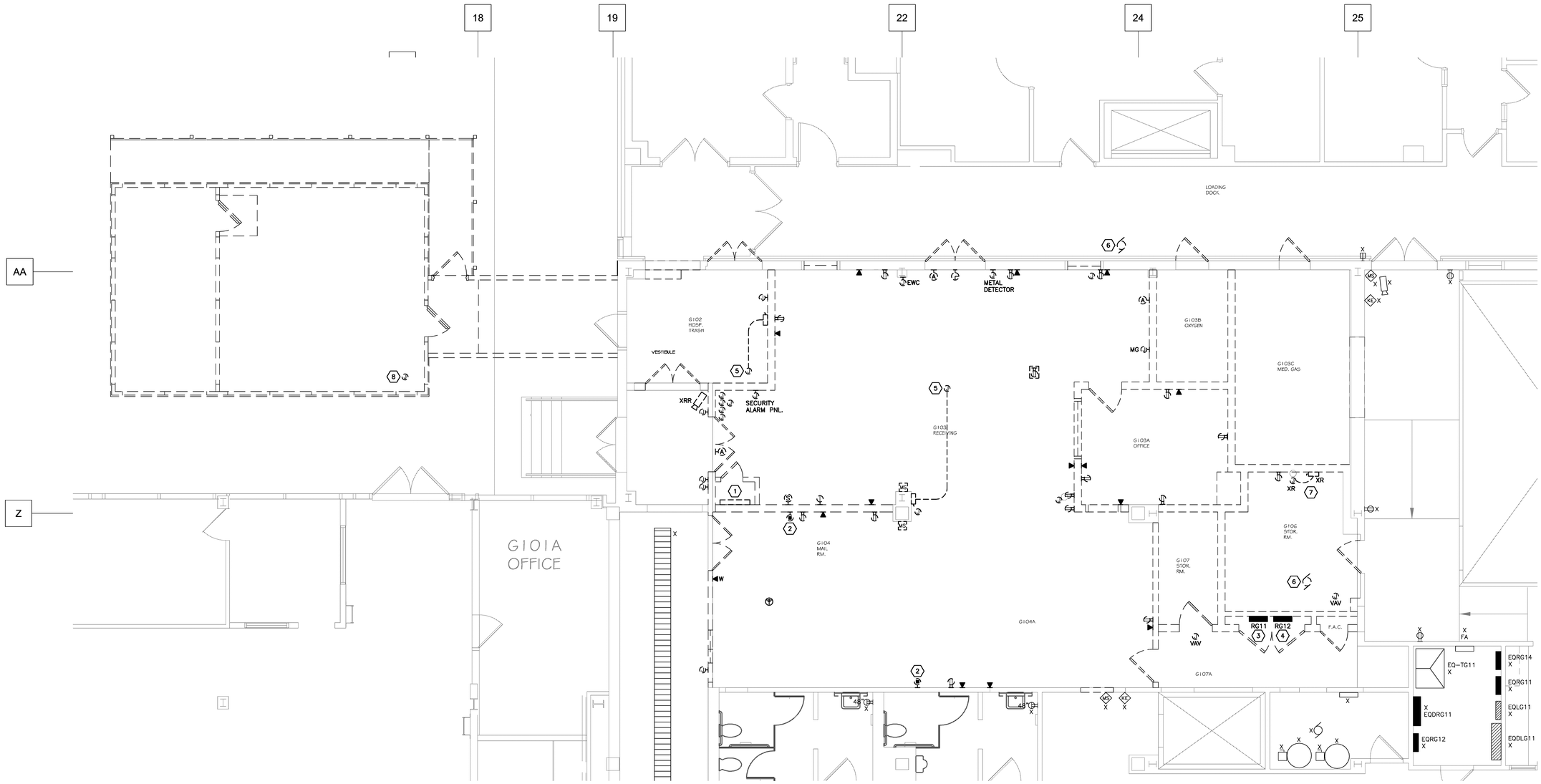

PARTIAL FIRST FLOOR POWER AND TELECOMMUNICATIONS DEMOLITION PLAN

1

SCALE: 1/4" = 1'0"

0' 2' 4' 8' 16'

ELECTRICAL DEMOLITION NOTES

D1. ALL EXISTING LIGHTING FIXTURES, RECEPTACLES, SPECIAL SYSTEMS OUTLETS, CONDUIT, WIRING ETC. THAT WILL NOT BE REUSED IN THE REMODELED INSTALLATION SHALL BE REMOVED UNLESS OTHERWISE NOTED. THIS DEMOLITION SHALL INCLUDE ALL ELECTRICAL ITEMS SHOWN ON THIS PLAN THAT ARE NOT DESIGNATED BY "X", "XN" OR "XRR" AND ALL OTHER ADDITIONAL ITEMS THAT ARE NOT SHOWN BUT THAT MUST BE REMOVED IN ORDER TO PRODUCE A NEAT, FINISHED, PROPERLY FUNCTIONING ELECTRICAL INSTALLATION. MAINTAIN CIRCUIT CONTINUITY TO ALL EXISTING REUSED ELECTRICAL SYSTEMS COMPONENTS – PROVIDE ALL CONDUIT AND WIRING NECESSARY TO ACHIEVE THE SAME. THE CONTRACTOR SHALL FIELD VERIFY THE NATURE AND EXTENT OF ALL DEMOLITION WORK AND SHALL INCLUDE COST FOR THE SAME IN THE BID SUBMITTAL.

D2. ALL EXISTING REMOVED ELECTRICAL EQUIPMENT, DEVICES, ETC. THAT ARE NOT RETAINED BY THE OWNER SHALL BE DISPOSED OF BY THE ELECTRICAL CONTRACTOR.

D3. DASHED WALLS ON PLAN INDICATE EXISTING CONSTRUCTION TO BE REMOVED.

D4. REFER TO ELECTRICAL LEGEND FOR ALL SYMBOL DESIGNATIONS. NOTE SPECIAL ATTENTION TO SELECTED EXISTING DEVICES, WIREWAYS, ETC. MARKED XB, XRR OR XN, AND REMOVE/BLANK OFF, RELOCATE OR REPLACE THESE COMPONENTS AS REQUIRED.

D5. MAINTAIN CIRCUIT CONTINUITY TO ALL EXISTING ELECTRICAL SYSTEM COMPONENTS IN AREAS NOT BEING REMODELED UNLESS OTHERWISE NOTED. PROVIDE ALL CONDUIT AND WIRING EXTENSIONS NECESSARY TO ACHIEVE SAME.

D6. THE ELECTRICAL CONTRACTOR SHALL CLOSELY COORDINATE ALL ELECTRICAL DEMOLITION WORK WITH THE GENERAL AND MECHANICAL CONTRACTORS, AND SHALL DISCONNECT ALL REQUIRED CIRCUITS IN A TIMELY MANNER.

D7. CONTACT THE ENGINEER IF A QUESTION SHOULD ARISE CONCERNING THE STATUS OF ANY OUTLET, DEVICE, LIGHTING FIXTURE, ETC.

DEMOLITION PLAN CODED NOTES:

1. REMOVE EXISTING ABANDONED PHONEBOARD COMPLETE.
2. REMOVE POWER TO EXISITNG ELECTRIFIED FURNITURE COMPLETE.
3. REMOVE EXISTING PANELBOARD "RG11" COMPLETE. CONTRACTOR SHALL REMOVE ALL CONDUITS COMPLETE AND PATCH CONCRETE FLOOR. COORDINATE WORK WITH GENERAL CONTRACTOR.
4. REMAINING LOADS ON PANELBOARD "RG12" AFTER DEMOLITION HAS COMPLETED SHALL BE RE-FED BY PANELBOARD "EQRG11" AND "EQRG14" IN ELECTRICAL ROOM 1C-445. PROVIDE NEW AND/OR CONNECT TO SPARE CIRCUIT BREAKERS AS NECESSARY TO RECONNECT CIRCUITS COMPLETE. FOR BIDDING PURPOSES, ASSUME A MAXIMUM OF 18 CIRCUITS REQUIRE RECONNECTION. REFER TO NEW POWER PLAN AND BRANCH CIRCUIT RECONNECTION TABLE FOR ADDITIONAL INFORMATION AND WORK REQUIREMENTS. CONTRACTOR SHALL REMOVE PANEL ALL CONDUITS COMPLETE AND PATCH CONCRETE FLOOR. COORDINATE WORK WITH GENERAL CONTRACTOR.
5. UNIT HEATER TO BE DEMOLISHED BY MECHANICAL CONTRACTOR. ELECTRICAL CONTRACTOR SHALL REMOVE DISCONNECT, CONDUIT, WIRING, ETC. COMPLETE BACK TO SOURCE. LABEL BREAKER AS SPARE.
6. EXHAUST FAN TO BE DEMOLISHED BY MECHANICAL CONTRACTOR. ELECTRICAL CONTRACTOR SHALL REMOVE DISCONNECT, CONDUIT, WIRING, ETC. COMPLETE BACK TO SOURCE. LABEL BREAKER AS SPARE.
7. EXISTING DRY SYSTEM SPRINKLER VALVE AND MOTOR TO BE REMOVED COMPLETE. REMOVE DISCONNECT, CONDUIT, WIRING, ETC. COMPLETE.
8. DISCONNECT AND REMOVE POWER (WIRING, CONDUITS, ETC) FROM EXISTING DRY STORAGE COOLER LIGHTING, RECEPTACLES AND MECHANICAL UNITS COMPLETE. THERE ARE APPROXIMATELY (7) 20A-120V-1Ø CIRCUITS CONNECTED FROM PANEL "EQDRG11" TO THE DRY COOLER.

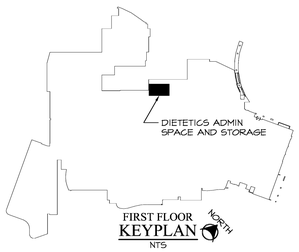

FOR CONSTRUCTION

FULLY SPRINKLERED

FINAL CD SUBMISSION - FOR CONSTRUCTION	07-11-12
Revisions:	Date

CONSULTANTS:

STATE OF OHIO — M.P. LONG 59459 — REGISTERED PROFESSIONAL ENGINEER — 12026

ARCHITECT/ENGINEERS:

MAKOVICH & PUSTI ARCHITECTS, INC.
111 FRONT STREET BEREA, OHIO 44017
(440)891-0959 p (440) 891-0986 f

FREDRICK, FREDRICK & HELLER ENGINEERS, INC.
672 EAST ROYALTON ROAD
BROADVIEW HEIGHTS, OHIO 44147
(440) 526-4100
FAX (440) 546-3690

Drawing Title: PARTIAL FIRST FLOOR POWER AND TELECOMMUNICATIONS DEMOLITION PLAN	Project Title: VAMC WADE PARK CLEVELAND DIETETICS ADMIN SPACE AND STORAGE	Project Number: 541-12-113	Office of Construction and Facilities Management
Approved: Project Director	Location: 10701 EAST BLVD, CLEVELAND, OHIO 44106	Building Number: 1	
	Date: 07-11-12 / Checked By: MPL / Drawn By: JDM	Drawing Number: 1-E6	Department of Veterans Affairs

VA FORM 08-6231

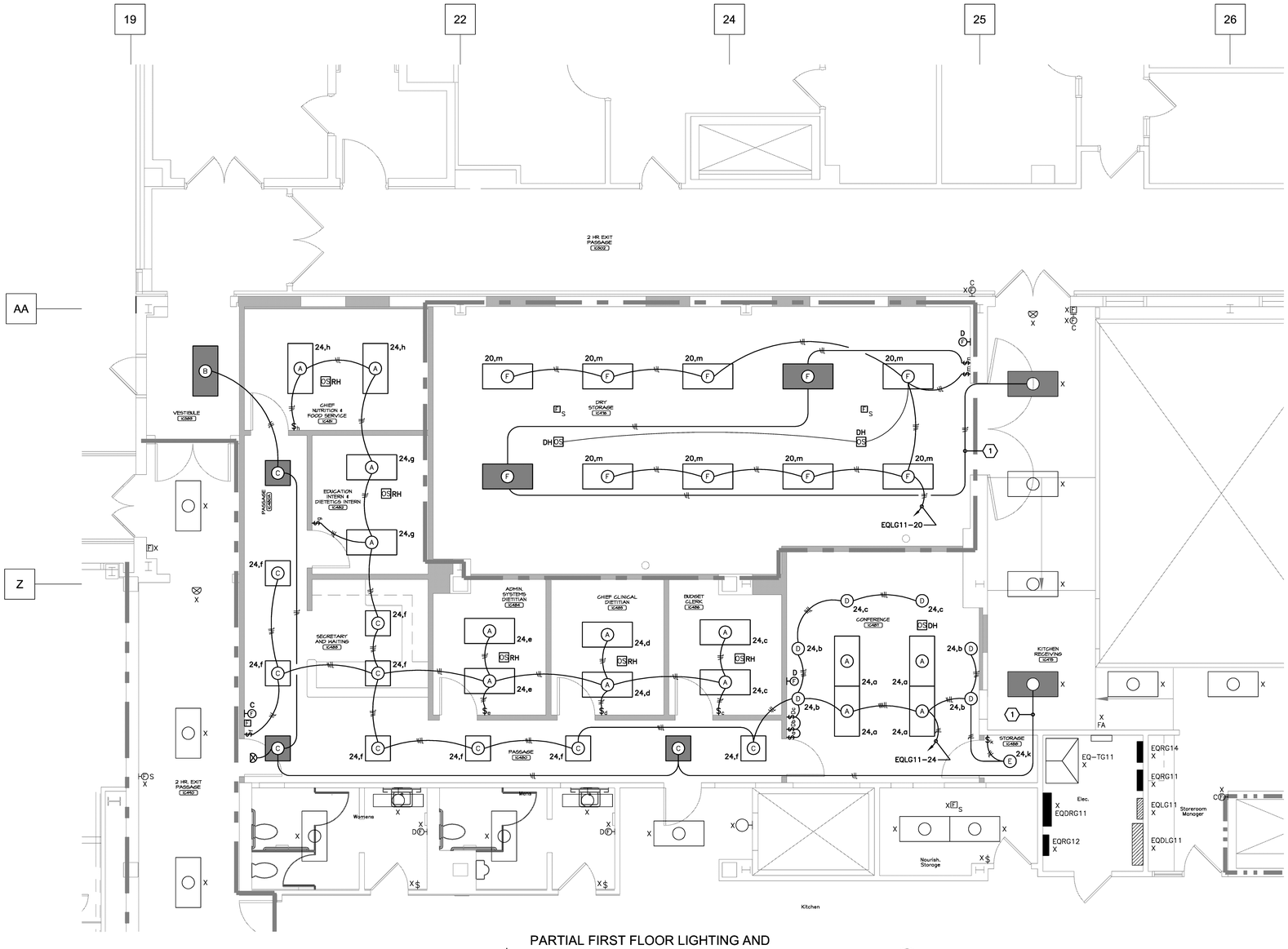

PARTIAL FIRST FLOOR LIGHTING AND FIRE ALARM NEW PLAN (1)

SCALE: 1/4" = 1'0"

0' 2' 4' 8' 16'

LIGHTING PLAN GENERAL NOTES:

L1. REFER TO ARCHITECTURAL REFLECTED CEILING PLAN FOR FINAL LOCATION OF ALL NEW CEILING MOUNTED LIGHTING FIXTURES. CLOSELY COORDINATE LOCATION OF LIGHTING FIXTURES AND SMOKE DETECTORS WITH HVAC DUCTS, DIFFUSERS, SPRINKLERS, PLUMBING, ETC. AND ADJUST LOCATIONS OF SELECTED ELECTRICAL EQUIPMENT IN ACCORDANCE WITH ENGINEER'S INSTRUCTIONS.

L2. REFER TO THE ARCHITECTURAL PLANS FOR EQUIPMENT LAYOUT. CLOSELY COORDINATE THE EXACT LOCATION OF ALL OUTLETS AND DEVICES WITH ARCHITECTURAL ELEVATIONS. ADJUST LOCATIONS AND MOUNTING HEIGHTS WHERE NECESSARY TO PREVENT INTERFERENCE WITH FURNITURE, FIXED CASEWORK, EQUIPMENT, ETC. VERIFY ALL CHANGES PRIOR TO ROUGH-IN.

L3. REFER TO ELECTRICAL DETAILS PLANS FOR OCCUPANCY SENSOR WIRING DIAGRAMS AND PROGRAM SCHEDULE FOR ADDITIONAL INFORMATION.

L4. MOUNT WALL SWITCHES AT LEAST 6" AWAY FROM OPEN DOOR SWING – DO NOT MOUNT BEHIND OPEN DOOR SWINGS.

L5. CIRCUIT ASSIGNMENTS ARE FOR REFERENCE ONLY. CONTRACTOR SHALL FIELD VERIFY CIRCUIT AVAILABILITY AND NOTIFY ENGINEER OF ANY DEVIATIONS.

GENERAL FIRE ALARM SYSTEM NOTES

F1. ALL FIRE ALARM SYSTEM DEVICES SHALL BE CONNECTED COMPLETE TO THE MAIN FIRE ALARM SYSTEM CONTROL PANEL IN ACCORDANCE WITH ENGINEER APPROVED MANUFACTURER'S SHOP DRAWING WIRING DIAGRAMS AND DETAILS.

F2. ALL FIRE ALARM SYSTEM CONDUCTORS SHALL BE INSTALLED IN 3/4" MINIMUM SIZE CONDUIT SYSTEM.

F3. IN GENERAL ALL MANUAL PULL STATIONS SHALL BE INSTALLED AT 48" ABOVE FINISHED FLOOR. MANUAL PULL STATIONS SHALL BE INSTALLED WITHIN 5'-0" OF ALL EXIT DOORWAY OPENINGS AT EACH EXIT ON EACH FLOOR. ADDITIONAL MANUAL PULL STATIONS SHALL BE PROVIDED SO THAT THE TRAVEL DISTANCE TO THE NEAREST PULL STATION WILL NOT EXCEED 200' MEASURED HORIZONTALLY ON THE SAME FLOOR.

F4. ALL AUDIO/VISUAL AND VISUAL ONLY FIRE ALARM SYSTEM DEVICES SHALL BE ADA TYPE. IN ALL CASES VISUAL DEVICES SHALL BE WALL MOUNTED AT 80" ABOVE FINISHED FLOOR. VISUAL DEVICES SHALL BE LOCATED NOT MORE THAN 15' FROM THE END OF ALL CORRIDORS WITH A SEPARATION NOT GREATER THAN 100' BETWEEN DEVICES. AUDIO DEVICES SHALL BE INSTALLED THROUGHOUT THE BUILDING TO ATTAIN MINIMUM DECIBEL LEVELS REQUIRED BY CODE. COMBINATION AUDIO/VISUAL DEVICES AND ADDITIONAL VISUAL ONLY DEVICES SHALL BE INSTALLED AT LOCATIONS AS INDICATED ON FLOOR PLANS.

F5. IN GENERAL SMOKE DETECTORS SHALL BE INSTALLED ON CEILINGS WITH SPACING NOT TO EXCEED MANUFACTURER'S RECOMMENDATION.

F6. SPRINKLER SYSTEM WATERFLOW ALARM INITIATING DEVICES SHALL BE CONNECTED COMPLETE TO THE FIRE ALARM SYSTEM.

F7. DUCT TYPE SMOKE DETECTORS SHALL BE PROVIDED FOR ALL HVAC RETURN AIR SYSTEMS WITH DESIGN CAPACITY GREATER THAN 2,000 CFM. WHERE RETURN AIR RISERS SERVE TWO OR MORE STORIES, AND ARE PART OF A RETURN AIR SYSTEM HAVING A DESIGN CAPACITY GREATER THAN 15,000 CFM, DUCT DETECTORS SHALL BE PROVIDED AT EACH STORY. COORDINATE EXACT DETECTOR LOCATIONS AND PROVISION OF ADEQUATE DUCT LENGTHS WITH THE MECHANICAL CONTRACTOR PRIOR TO ROUGH-IN.

F8. PROVIDE ALL FIRE ALARM SYSTEM COMPONENTS NECESSARY FOR SHUT DOWN OF HVAC EQUIPMENT BY THE FIRE ALARM SYSTEM WHERE SAME IS REQUIRED.

F9. PROVIDE ALL FIRE ALARM SYSTEM COMPONENTS NECESSARY FOR ELEVATOR CAPTURE BY THE FIRE ALARM SYSTEM WHERE SAME IS REQUIRED.

F10. SMOKE DETECTORS SHALL BE INSTALLED WITHIN 5'-0" OF CENTERLINE OF SMOKE DOORS ON HOLD-OPEN.

F11. SMOKE DETECTORS SHALL NOT BE LOCATED CLOSER THAN 3'-0" FROM AN AIR SUPPLY DIFFUSER.

F12. AUTOMATIC DOORS LOCATED ON A 2-HOUR FIRE RATED WALL SHALL HAVE A FIRE ALARM INTERFACE THAT INTERRUPTS 120V POWER FOR THE AUTOMATIC DOOR OPENER UNDER A FIRE ALARM CONDITION. PROVIDE (1) CONTROL MODULE FROM EACH BUILDING FIRE ALARM SYSTEM IF LOCATED ALONG ALONG THE BORDER OF TWO BUILDINGS.

NEW PLAN CODED NOTES:

(1) CONNECT NEW FIXTURES TO EXISTING LIFE SAFETY CIRCUIT IN AREA. VERIFY THAT CONNECT LOAD DOES NOT EXCEED 16A.

RATED WALL DESIGNATION:

1 HOUR FIRE RATED CONSTRUCTION

2 HOUR FIRE RATED CONSTRUCTION

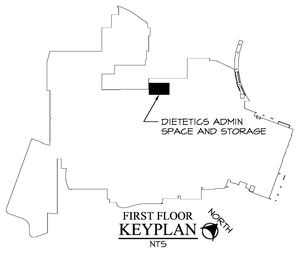

FOR CONSTRUCTION

FULLY SPRINKLERED

FINAL GD SUBMISSION - FOR CONSTRUCTION	07-11-12
Revisions:	Date

CONSULTANTS:

STATE OF OHIO — M.P. LONG 59459 — REGISTERED PROFESSIONAL ENGINEER — 12026

ARCHITECT/ENGINEERS:

MAKOVICH & PUSTI ARCHITECTS, INC.
111 FRONT STREET BEREA, OHIO 44017
(440) 891-9112 p (440) 891-0386 f

FREDRICK, FREDRICK & HELLER ENGINEERS, INC.
672 EAST ROYALTON ROAD
BROADVIEW HTS., OHIO 44147
TEL (440) 546-9696
FAX (440) 546-9699

Drawing Title: PARTIAL FIRST FLOOR LIGHTING AND FIRE ALARM NEW PLAN

Approved: Project Director

Project Title: VAMC WADE PARK CLEVELAND DIETETICS ADMIN SPACE AND STORAGE

Location: 10701 EAST BLVD, CLEVELAND, OHIO 44106

Date: 07-11-12 | Checked By: MPL | Drawn By: JDM

Project Number: 541-12-113

Building Number: 1

Drawing Number: 1-E7

Office of Construction and Facilities Management

Department of Veterans Affairs

VA FORM 08-6231

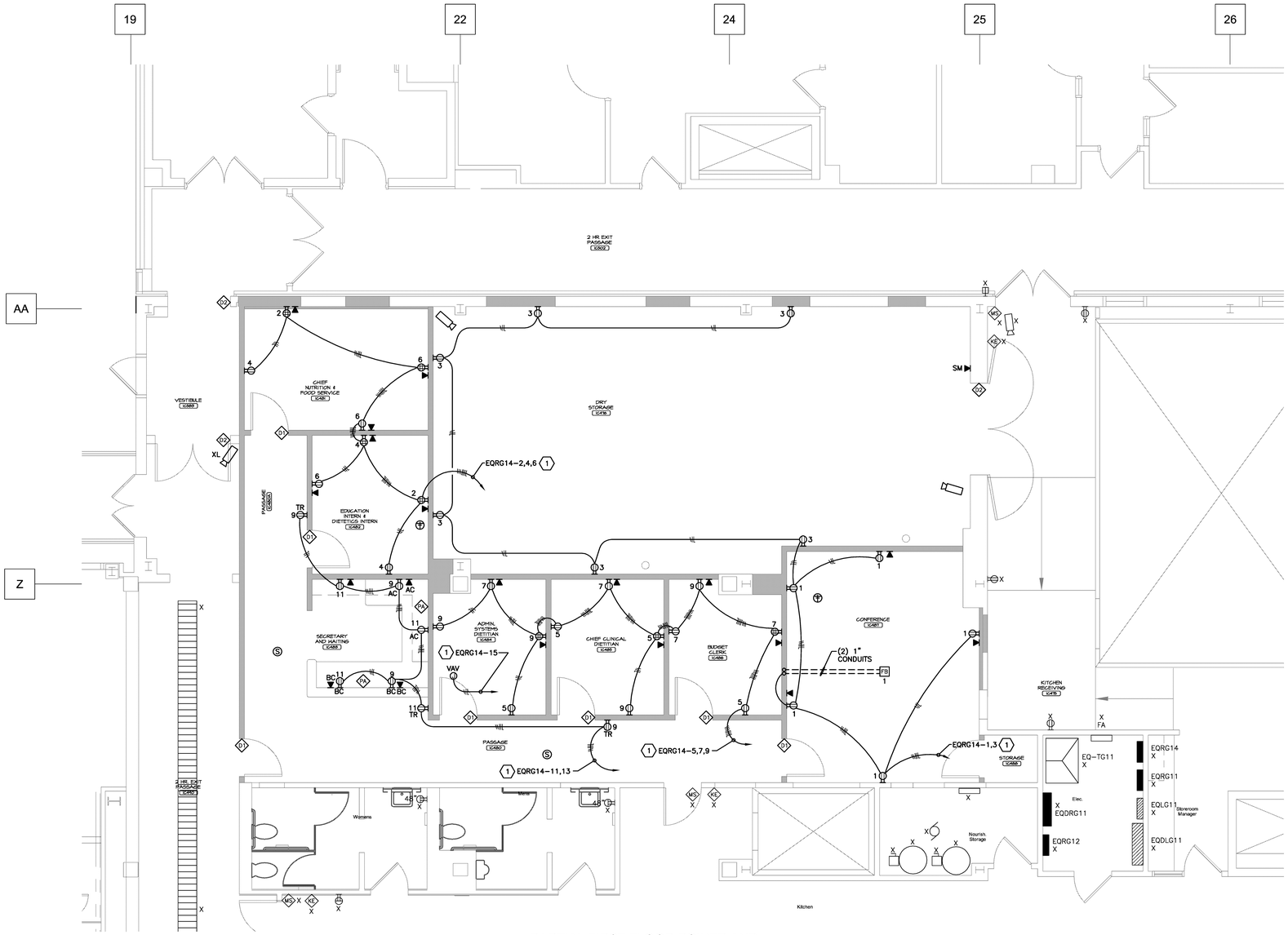

PARTIAL FIRST FLOOR POWER AND TELECOMMUNICATIONS NEW PLAN (1)

SCALE: 1/4" = 1'0"

0' 2' 4' 8' 16'

POWER GENERAL NOTES:

P1. REFER TO THE ARCHITECTURAL PLANS FOR EQUIPMENT LAYOUT. CLOSELY COORDINATE THE EXACT LOCATION OF ALL OUTLETS AND DEVICES WITH ARCHITECTURAL ELEVATIONS. ADJUST LOCATIONS AND MOUNTING HEIGHTS WHERE NECESSARY TO PREVENT INTERFERENCE WITH FURNITURE, FIXED CASEWORK, EQUIPMENT, ETC. VERIFY ALL CHANGES PRIOR TO ROUGH-IN.

P2. ELECTRICAL CONTRACTOR SHALL VERIFY ALL EQUIPMENT LOCATIONS, MOUNTING HEIGHTS, AND CONNECTION REQUIREMENTS (RECEPTACLES, SWITCHES, DISCONNECTS) WITH EQUIPMENT VENDOR PRIOR TO ROUGH-IN.

P3. SHARED NEUTRALS ARE NOT PERMITTED FOR BRANCH CIRCUITS EXCEPT WHERE FEEDING PRE-WIRED FURNITURE WITH MULTI-WIRE CIRCUITS.

COMMUNICATIONS GENERAL NOTES:

T1. ALL CONDUITS SHALL BE INSTALLED COMPLETE WITH PULLWIRE.

T2. THE NUMBER OF CABLES IN ANY PATHWAY SHALL NOT EXCEED 40% FILL.

T3. PROVIDE CAT 6 STRUCTURED CABLING (PLENUM RATED) PER VA STANDARDS.

T4. PROVIDE 5' SERVICE LOOPS FOR CABLING AT NEW TELECOMMUNICATIONS OUTLETS.

T5. PROVIDE 20' SERVICE LOOPS FOR CABLING AT WIRELESS ACCESS OUTLETS.

SECURITY CAMERA GENERAL NOTES:

G1. FIELD VERIFY MOUNTING LOCATIONS FOR CAMERAS WITH VA COTR PRIOR TO ROUGH-IN.

G2. CONTRACTOR SHALL MAKE FINAL ADJUSTMENTS TO AIMING AND ORIENTATION AFTER OWNER'S INSPECTION.

NEW PLAN CODED NOTES:

(1) CONNECT TO SPARE 20A-1P CIRCUITS IN EXISTING PANELBOARD AS DESIGNATED.

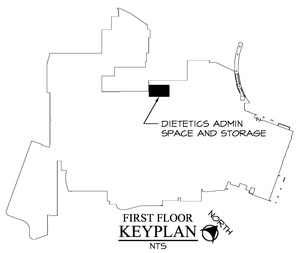

FOR CONSTRUCTION

FULLY SPRINKLERED

FINAL CD SUBMISSION - FOR CONSTRUCTION	07-11-12
Revisions:	Date

CONSULTANTS:

STATE OF OHIO — M.P. LONG 59459 — REGISTERED PROFESSIONAL ENGINEER — 12026

ARCHITECT/ENGINEERS:

MAKOVICH & PUSTI ARCHITECTS, INC.
111 FRONT STREET BEREA, OHIO 44017
(440) 891-8910 p (440) 891-0086 f

FREDRICK, FREDRICK & HELLER ENGINEERS, INC.
839 EAST 185TH STREET (ROAD)
BROADVIEW HTS., OHIO 44147
TEL (440) 526-1696
FAX (440) 546-9699

Drawing Title: PARTIAL FIRST FLOOR POWER AND TELECOMMUNICATIONS NEW PLAN

Approved: Project Director

Project Title: VAMC WADE PARK CLEVELAND DIETETICS ADMIN SPACE AND STORAGE

Location: 10701 EAST BLVD, CLEVELAND, OHIO 44106

Date: 07-11-12 | Checked By: MPL | Drawn By: JDM

Project Number: 541-12-113

Building Number: 1

Drawing Number: 1-E8

Office of Construction and Facilities Management

Department of Veterans Affairs

VA FORM 08-6231

BRANCH CIRCUIT RECONNECTION TABLE

BRANCH CIRCUIT INFORMATION													MASTER TERMINAL BLOCK INFORMATION				
TAG	LOAD DESCRIPTION		VOLTAGE	O.C.P. OR STARTER SIZE	EXIST. SOURCE	NEW SOURCE	CIRCUIT NUMBERS	CONDUIT SIZES	CONDUCTORS	ADJ. FACTOR NEC 310-15(B)(3)(a)	ALLOW AMP 90°C NEC 310-15(B)(16)	ADJUSTED AMPACITY	MTB ID	# OF 12 POINT BOARDS (30A-600V)	# OF 8 POINT BOARDS (85A-600V)	GROUND BAR	ENCLOSURE DIMENSIONS
01	(9) REMAINING 20A-120V CIRCUITS		120V	(9) 20A-1P	RG12	EQRG11/EQRG14	-	1-1/4"C	9 #10H, 9 #10N & 1 #10EG	50%	40	20	MTB1-RG12A	3	1	1	18" x 18" x 4"
02	(5) REMAINING 20A-120V CIRCUITS		120V	(5) 20A-1P	RG12	EQRG11/EQRG14	-	1-1/4"C	5 #10H, 5 #10N & 1 #10EG	50%	40	20					
03	(1) REMAINING 30A-120V CIRCUIT		120V	(1) 30A-1P	RG12	EQRG11/EQRG14	-	3/4"C	2 #10H & 1 #10EG	100%	40	40					
04	(1) REMAINING 40A-120V CIRCUIT		120V	(1) 40A-1P	RG12	EQRG11/EQRG14	-	3/4"C	2 #8H & 1 #8EG	100%	55	55					
05	(1) REMAINING 20A-208V CIRCUIT		208V	(1) 30A-2P	RG12	EQRG11/EQRG14	-	3/4"C	2 #10H & 1 #10EG	100%	40	40					

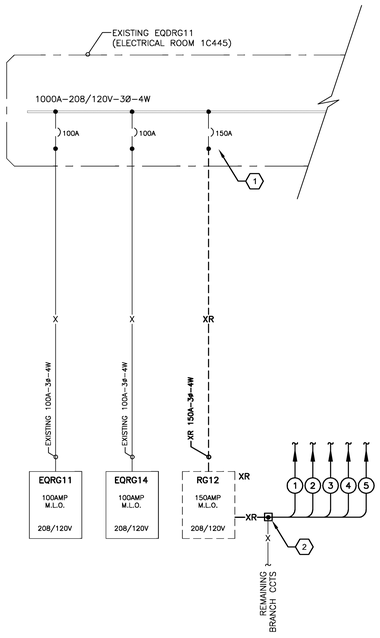

POWER DISTRIBUTION - DEMO ONE-LINE DIAGRAM (1)
NOT TO SCALE

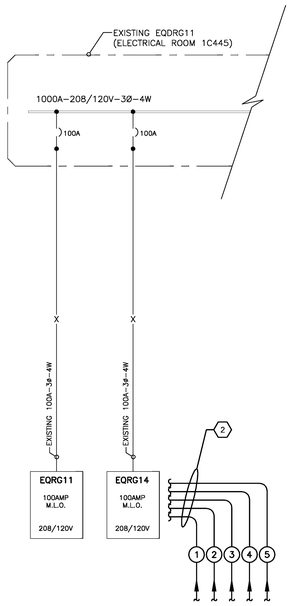

POWER DISTRIBUTION - NEW ONE-LINE DIAGRAM (2)
NOT TO SCALE

CIRCUIT/FEEDER RECONNECTION NOTES:

1. ELECTRICAL CONTRACTOR SHALL IDENTIFY ALL EXISTING CIRCUITS FED OUT OF EXISTING ELECTRICAL CLOSET PRIOR TO DISCONNECTING. TRACE EXISTING CIRCUITS WITH AN ADVANCED WIRE TRACER (AMPROBE AT-4000 OR SIMILAR) THAT WORKS WITH ENERGIZED OR DE-ENERGIZED CIRCUITS AND IS CAPABLE OF INJECTING TRACE SIGNAL WITH CLAMP-ON ATTACHMENT FOR NON-CONTACT OPERATION. IN GENERAL, CIRCUITS MUST BE TRACED WHILE ENERGIZED.

   A WRITTEN 'LOAD IDENTIFICATION' REPORT OF ALL EXISTING CIRCUITS FED FROM THESE ROOMS SHALL BE SUBMITTED TO THE C.O.T.R. FOR REVIEW WITH THE FACILITIES MAINTENANCE DEPARTMENT. THE REPORT SHALL INDICATE; SOURCE EQUIPMENT NAME, CIRCUIT NUMBER, CIRCUIT RATING, LOAD DESCRIPTION, LOAD LOCATION, DATE OF TRACE AND INITIAL OF PERSON COMPLETING TRACE.

2. PERFORM ALL CUT-OVER WORK OF RECONNECTED BRANCH CIRCUITS/FEEDERS DURING VAMC 'OFF-HOURS'. THIS WORK SHALL BE SCHEDULED WITH THE C.O.T.R. AT LEAST 14 DAYS IN ADVANCE. ALL PREMIUM COST (LABOR, EQUIPMENT RENTALS, ETC) ASSOCIATED WITH PERFORMING THIS WORK DURING SECOND SHIFTS, THIRD SHIFTS OR WEEKENDS SHALL BE INCLUDED IN THE CONTRACTORS BID PRICE.

JOINT AND SPLICE SPECIFICATION

1. RECONNECTIONS FOR 20AMP AND 30AMP CIRCUITS SHALL BE COMPLETED ON TERMINAL BLOCK STRIPS TO ORGANIZE RECONNECTED CIRCUITS.
2. JOINT AND SPLICE IN #8 AWG AND LARGER WIRES SHALL BE MADE WITH COMPRESSION TYPE MECHANICAL CONNECTORS AND INSULATED WITH 3M HEAT SHRINK TUBING TO A 600V INSULATION LEVEL.
3. LABEL THE J-BOX COVER WITH A BLACK PERMANENT MARKER INDICATING SOURCE, CIRCUIT AND LOAD INFORMATION:
   "CHNAA"
   "40A-3P BREAKER #2"
   "AHU S-7"
4. VERIFY PHASE ROTATION PRIOR TO STARTING ANY RECONNECTED LOADS. MAINTAIN LOG OF PHASE ROTATION FOR EACH LOAD INDICATING 1)EXISTING PHASE ROTATION, 2)RECONNECTED PHASE ROTATION 3)TIME AND DATE OF PHASE ROTATION TEST, 4) INITIALS OF PERSON VERIFYING TEST.

ONE LINE CODED NOTES:

1. LABEL EXISTING BREAKER AS SPARE AFTER DEMOLITION OF LOAD.
2. REMAINING BRANCH CIRCUITS IN PANELBOARD "RG12" SHALL BE RECONNECTED TO BREAKERS IN PANELBOARDS "EQRG11" AND "EQRG14" IN ELECTRICAL ROOM 1C-445. PROVIDE NEW AND/OR CONNECT TO SPARE BREAKERS AS NECESSARY TO RECONNECT CIRCUITS COMPLETE. REFER TO 'BRANCH CIRCUIT RECONNECTION TABLE' AND DEMOLITION POWER PLAN FOR ADDITIONAL INFORMATION.

BRANCH CIRCUIT RECONNECTION DETAIL - TYPICAL

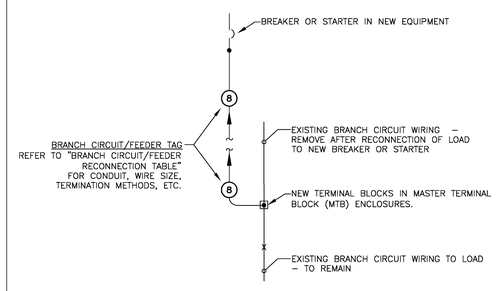

PANEL: **EQRG11 - 208/120V - 3Ø - 4W**
LOCATION: ELEC. RM. G104E — OCP: 125A
MOUNTING: SURFACE — MAIN: MLO
COMMENTS: SIEMENS PK42ML125ATS

KVA:	DESCRIPTION:	CB:	CCT:	N	CCT:	CB:	DESCRIPTION:	KVA:
0.00	EXISTING LOAD	20/1	1		2			0.00
0.00	EXISTING LOAD	20/1	3		4	20/3	EXISTING LOAD	0.00
0.00	EXISTING LOAD	20/1	5		6			0.00
0.00	EXISTING LOAD	20/1	7		8	20/1	EXISTING LOAD	0.00
0.00	EXISTING LOAD	20/1	9		10	20/1	EXISTING LOAD	0.00
0.00	EXISTING LOAD	20/1	11		12	20/1	SPARE	0.00
0.00	EXISTING LOAD	20/1	13		14	20/1	EXISTING LOAD	0.00
0.00	EXISTING LOAD	20/1	15		16	20/1	SPARE	0.00
0.00	EXISTING LOAD	20/1	17		18	20/1	EXISTING LOAD	0.00
0.00	EXISTING LOAD	20/1	19		20	20/1	SPARE	0.00
0.00	EXISTING LOAD	20/1	21		22	20/1	SPARE	0.00
0.00	EXISTING LOAD	20/1	23		24	20/1	SPARE	0.00
0.00	EXISTING LOAD	20/1	25		26	20/1	EXISTING LOAD	0.00
0.00	SPARE	20/1	27		28	20/1	EXISTING LOAD	0.00
0.00	SPARE	20/1	29		30	20/1	SPARE	0.00
0.00	EXISTING LOAD	20/1	31		32	20/1	SPARE	0.00
0.00	EXISTING LOAD	20/1	33		34	20/1	SPARE	0.00
0.00	EXISTING LOAD	20/1	35		36	20/1	SPARE	0.00
0.00	SPARE	20/1	37		38	20/1	EXISTING LOAD	0.00
0.00	SPARE	20/1	39		40	20/1	EXISTING LOAD	0.00
0.00	PROVISION	20/1	41		42	20/1	PROVISION	0.00
				GROUND BUS				

TOTAL CONNECTED KVA: 0.00
TOTAL DEMAND KVA: 0.00 — TOTAL DEMAND AMPS: 0.00

PANEL: **EQRG14 - 208/120V - 3Ø - 4W**
LOCATION: ELEC. RM. G104E — OCP: 125A
MOUNTING: SURFACE — MAIN: MLO
COMMENTS: SIEMENS PK42ML125A

KVA:	DESCRIPTION:	CB:	CCT:	N	CCT:	CB:	DESCRIPTION:	KVA:
1.00	**REC-CONF G102F**	**20/1**	**1**		**2**	**20/1**	**OFFICES G102A, G102B**	**0.80**
1.40	**REC-STORAGE G103A**	**20/1**	**3**		**4**	**20/1**	**OFFICES G102A, G102B**	**0.80**
1.00	**REC-OFFICES**	**20/1**	**5**		**6**	**20/1**	**OFFICES G102A, G102B**	**0.80**
1.00	**REC-OFFICES**	**20/1**	**7**		8	20/1	EXISTING LOAD	0.00
1.00	**REC-OFFICES**	**20/1**	**9**		10	20/1	EXISTING LOAD	0.00
0.80	**REC-PASSAGE,SEC**	**20/1**	**11**		12	20/1	EXISTING LOAD	0.00
0.80	**REC-PASSAGE,SEC**	**20/1**	**13**		14	20/2	EXISTING LOAD	0.00
0.20	**VAV BOXES**	**20/1**	**15**		16			0.00
0.00	SPARE	20/1	17		18	20/2	EXISTING LOAD	0.00
0.00	SPARE	20/1	19		20			0.00
0.00	EXISTING LOAD	20/1	21		22	20/2	EXISTING LOAD	0.00
0.00	EXISTING LOAD	20/1	23		24			0.00
0.00	SPARE	20/1	25		26	20/1	EXISTING LOAD	0.00
0.00	PROVISION	20/1	27		28	30/2	EXISTING LOAD	0.00
0.00	PROVISION	20/1	29		30			0.00
0.00	PROVISION	20/1	31		32	20/1	PROVISION	0.00
0.00	PROVISION	20/1	33		34	20/1	PROVISION	0.00
0.00	PROVISION	20/1	35		36	20/1	PROVISION	0.00
0.00	PROVISION	20/1	37		38	20/1	PROVISION	0.00
0.00	PROVISION	20/1	39		40	20/1	PROVISION	0.00
0.00	PROVISION	20/1	41		42	20/1	PROVISION	0.00
				GROUND BUS				

TOTAL CONNECTED KVA: 9.60
TOTAL DEMAND KVA: 9.60 — TOTAL DEMAND AMPS: 26.65

PANEL: **EQLG11 - 480/277V - 3Ø - 4W**
LOCATION: ELEC. RM. G104E — OCP: 250A
MOUNTING: SURFACE — MAIN: MLO
COMMENTS: SIEMENS P1E42ML250ATS

KVA:	DESCRIPTION:	CB:	CCT:	N	CCT:	CB:	DESCRIPTION:	KVA:
0.00	SPARE	20/2	1		2			0.00
0.00			3		4	40/3	EXISTING LOAD	0.00
0.00	SPARE	20/2	5		6			0.00
0.00			7		8			0.00
0.00			9		10	30/3	EXISTING LOAD	0.00
0.00	EXISTING LOAD	20/3	11		12			0.00
0.00			13		14	20/1	EXISTING LOAD	0.00
0.00			15		16	20/1	EXISTING LOAD	0.00
0.00	EXISTING LOAD	20/3	17		18	20/1	EXISTING LOAD	0.00
0.00			19		**20**	**20/1**	**DRY STORAGE LTG.**	**0.84**
0.00			21		22	20/1	EXISTING LOAD	0.00
0.00	EXISTING LOAD	15/3	23		**24**	**20/1**	**DIETETICS LTG.**	**1.63**
0.00			25		26	20/1	EXISTING LOAD	0.00
0.00	PROVISION	20/1	27		28	20/1	EXISTING LOAD	0.00
0.00	PROVISION	20/1	29		30			0.00
0.00	PROVISION	20/1	31		32	30/3	PROVISION	0.00
0.00	EXISTING LOAD	20/1	33		34			0.00
0.00	EXISTING LOAD	20/1	35		36	20/1	SPARE	0.00
0.00			37		38			0.00
0.00	EXISTING LOAD	15/3	39		40	30/3	EXISTING LOAD	0.00
0.00			41		42			0.00
				GROUND BUS				

TOTAL CONNECTED KVA: 2.47
TOTAL DEMAND KVA: 2.47 — TOTAL DEMAND AMPS: 2.97

NOTE: CONTRACTOR SHALL PROVIDE UPDATED TYPED PANELBOARD SCHEDULES FOR ALL PANELS WITH CIRCUIT MODIFICATIONS.

LEGEND: POWER DISTRIBUTION ONE-LINE

- EXISTING EQUIPMENT, FEEDER/CIRCUIT – TO BE DEMOLISHED
- EXISTING EQUIPMENT, FEEDER/CIRCUIT – TO REMAIN
- 400A–3Ø–4W — NEW FEEDER/CIRCUIT AND FEEDER SIZE
- FUTURE EQUIPMENT, FEEDER/CIRCUIT – N.I.C.
- NAME — EQUIPMENT OUTLINE
- SPLICE JOINT FOR RECONNECTION OF EXISTING CIRCUITS TO NEW SOURCE
- 225AF 225AT — BOLTED STATIONARY CIRCUIT BREAKER – 3-POLE UNLESS OTHERWISE NOTED
  - GF – EQUIP BREAKER W/ GROUND FAULT TRIP
  - GFA – EQUIP BREAKER W/ GROUND FAULT ALARM
  - LSI – EQUIP BREAKER W/ ADJUSTABLE LONG, SHORT AND INSTANT. SETTINGS
- GROUNDING TERMINATION POINT FOR AN EQUIPMENT GROUNDING CONDUCTOR. CONNECTION SHALL BE MADE BY BONDING THE EQUIPMENT GROUNDING CONDUCTOR TO THE GROUNDED SERVICE CONDUCTOR AND THE GROUNDING ELECTRODE CONDUCTOR.
- # — CONDUIT REFERENCE TAG– REFER TO "BRANCH CIRCUIT RECONNECTION TABLE" FOR CONDUIT AND CONDUCTOR SIZING.

FOR CONSTRUCTION

FULLY SPRINKLERED

FINAL CD SUBMISSION - FOR CONSTRUCTION	07-11-12
Revisions:	Date

CONSULTANTS:

STATE OF OHIO — M.P. LONG 59459 — REGISTERED PROFESSIONAL ENGINEER — 12026

ARCHITECT/ENGINEERS:

MAKOVICH & PUSTI ARCHITECTS, INC.
111 FRONT STREET BEREA, OHIO 44017
(440) 891-8112 p (440) 891-0386 f

FREDRICK, FREDRICK & HELLER ENGINEERS, INC.
672 EAST ROYALTON ROAD
BROADVIEW HTS., OHIO 44147
TEL (440) 546-9696
FAX (440) 546-9699

Drawing Title: POWER DISTRIBUTION ONE-LINE DIAGRAM AND PANELBOARD SCHEDULES

Approved: Project Director

Project Title: VAMC WADE PARK CLEVELAND DIETETICS ADMIN SPACE AND STORAGE

Location: 10701 EAST BLVD, CLEVELAND, OHIO 44106

Date: 07-11-12 — Checked By: MPL — Drawn By: JDM

Project Number: 541-12-113

Building Number: 1

Drawing Number: 1-E9

Office of Construction and Facilities Management

Department of Veterans Affairs

VA FORM 08-6231

L L 2 1 LS

- SYSTEM BRANCH
  - = NORMAL BRANCH (BLANK)
  - LS = LIFE SAFTEY BRANCH
  - CR = CRITICAL BRANCH
  - EQ = EQUIPMENT BRANCH
- PANEL NUMBER (1,2,3,...)
- FLOOR NUMBER (B,1,2)
- WARD NUMBER
  - A,B,C,D,E,F,G,H,K,L = EXISTING AREAS
- PANEL VOLTAGE DESIGNATION
  - H = 480/277V–3ø–4W
  - L = 208/120V–3ø–4W

PANELBOARD NAMING FORMAT

NOT TO SCALE

DP H L 2 1 CR

- SYSTEM BRANCH
  - = NORMAL BRANCH (BLANK)
  - LS = LIFE SAFTEY BRANCH
  - CR = CRITICAL BRANCH
  - EQ = EQUIPMENT BRANCH
- PANEL NUMBER (1,2,3,...)
- FLOOR NUMBER (B,1,2)
- WARD NUMBER
  - A,B,C,D,E,F,G,H,K,L = EXISTING AREAS
- PANEL VOLTAGE DESIGNATION
  - H = 480/277V–3ø–4W
  - L = 208/120V–3ø–4W
- DP = DISTRIBUTION PANEL
- SB = SWITCHBOARD
- IP = ISOLATED POWER

DISTRIBUTION PANELBOARD NAMING FORMAT

NOT TO SCALE

TYPICAL
PANELBOARD NAMEPLATE

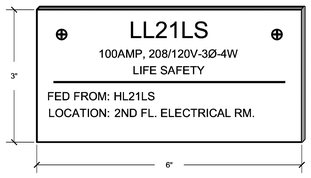

NAMEPLATE REQUIREMENTS:

1. PROVIDE AN IDENTIFICATION SIGN WHICH CLEARLY INDICATES ELECTRICAL SYSTEM INFORMATION FOR PANELBOARDS, DISTRIBUTION PANELS, SWITCHBOARDS, MOTOR CONTROL CENTERS, AUTOMATIC TRANSFER SWITCHES.
2. PROVIDE ENGRAVED 1/2"H (MIN.) LETTERING ON PHENOLIC NAMEPLATE WITH THE FOLLOWING COLOR FORMAT:
   - A. 208/120 VOLTS (NORMAL) – GREEN BACKGROUND, WHITE LETTERS
   - B. 480/277 VOLTS (NORMAL) – BLACK BACKGROUND, WHITE LETTERS
   - C. 208/120 VOLTS (EMERG.) – WHITE BACKGROUND, RED LETTERS
   - D. 480/277 VOLTS (EMERG.) – RED BACKGROUND, WHITE LETTERS
3. REFER TO ELECTRICAL SPECIFICATIONS FOR ADDITIONAL INFORMATION.

DISTRIBUTION EQUIPMENT NAMEPLATE DETAIL

NOT TO SCALE — 4

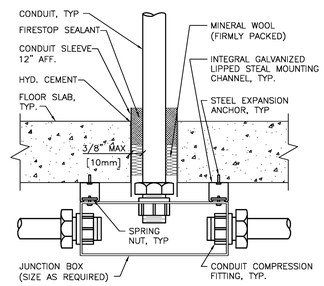

FLOOR PENETRATION DETAIL

NOT TO SCALE — 7

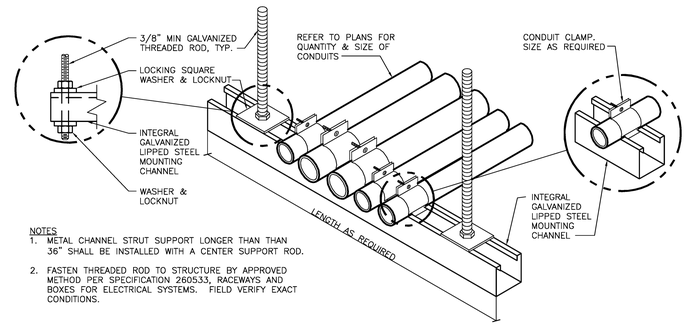

NOTES
1. METAL CHANNEL STRUT SUPPORT LONGER THAN THAN 36" SHALL BE INSTALLED WITH A CENTER SUPPORT ROD.
2. FASTEN THREADED ROD TO STRUCTURE BY APPROVED METHOD PER SPECIFICATION 260533, RACEWAYS AND BOXES FOR ELECTRICAL SYSTEMS. FIELD VERIFY EXACT CONDITIONS.

CONDUIT TRAPEZE MOUNTING DETAIL

NOT TO SCALE — 6

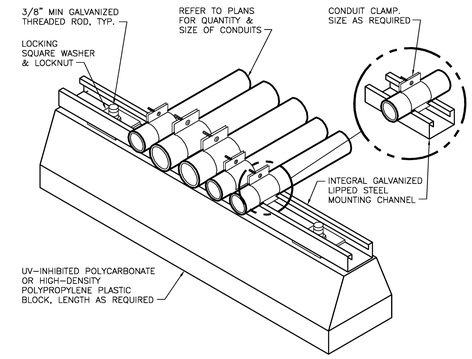

ROOF CONDUIT SUPPORT DETAIL

NOT TO SCALE — 5

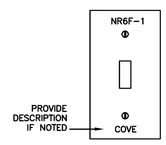

WALL SWITCH

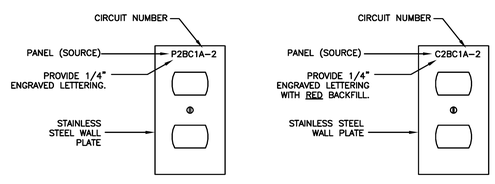

NORMAL RECEPTACLE

EMERGENCY RECEPTACLE

WALL PLATE DETAIL NOTES:

1. RECEPTACLE DETAILS ARE TYPICAL FOR WALL SWITCH.
2. STICK–ON LABELS ARE NOT ACCEPTABLE.
3. REFER TO SPECIFICATIONS FOR ADDITIONAL REQUIREMENTS.

TYPICAL RECEPTACLE WALL PLATE DETAIL

NOT TO SCALE — 3

OCCUPANCY SENSOR SYSTEM SPECIFICATIONS

A. GENERAL SYSTEM SPECIFICATIONS

1. POWER SUPPLY, RELAY UNITS AND OCCUPANCY SENSOR SHALL BE FROM A SINGLE MANUFACTURER.
2. CONTRACTOR MUST SUBMIT THE FOLLOWING AT A MINIMUM FOR SHOP DRAWING REVIEW.
   - a. COMPONENTS
     - • POWER SUPPLY
     - • RELAY UNITS
     - • OCCUPANCY SENSOR
   - b. POWER SUPPLY CALCULATIONS
   - c. WIRING DIAGRAM
3. POWER SUPPLY, RELAY UNITS AND OCCUPANCY SENSOR SHALL ALL HAVE A FIVE YEAR WARRANTY.
4. REFER TO SPECIFICATIONS SECTION 260923 FOR ADDITIONAL WORK REQUIREMENTS.

B. SENSOR

- a. MINIMUM COVERAGE AREA OF 500SQFT WITH ADJUSTABLE SENSITIVITY
- b. PROGRAMMABLE AUTO–ON/MANUAL–ON
- c. 360 DEGREE COVERAGE OR 180 DEGREE COVERAGE AS NECESSARY SUCH THAT THE ENTIRE ROOM IS COVERED WITHOUT NUISANCE TRIPS (AWAY FROM GLASS WALLS, DOORS TO HALLWAYS, ETC.)
- d. ADJUSTABLE TIME DELAY

C. POWER SUPPLY SPECIFICATIONS

1. INPUT
   - a. VOLTAGE: 277/120V–1ϕ
2. OUTPUT
   - a. VOLTAGE: 24VDC
   - b. PROVIDE POWER SUPPLY OR SUPPLIES AS NECESSARY FOR ALL CONNECTED ACCESSORIES (SENSORS, RELAYS, ETC.)
3. SHALL BE UL LISTED

D. RELAY UNIT SPECIFICATIONS

1. INPUT
   - a. VOLTAGE: 24VDC
2. FORM C RELAY (ONE NORMALLY CLOSED, ONE NORMALLY OPEN CONTACT)

MINIMUM RATINGS		
BALLAST	INCANDESCENT	MOTOR
5A @ 120VAC 3A @ 277VAC	3A @ 120VAC 2.5A @ 277VAC	.25HP @ 120VAC .5HP @ 277VAC

3. NORMALLY OPEN (N.O.) OR NORMALLY CLOSED (N.C.) SINGLE CONTACT RELAY

MINIMUM RATINGS		
BALLAST	INCANDESCENT	MOTOR
20A @ 120VAC 20A @ 277VAC	13A @ 120VAC –	1HP @ 120VAC –

4. SHALL BE UL LISTED

OCCUPANCY SENSOR SYSTEM SPECIFICATIONS

NOT TO SCALE — 2

OCCUPANCY SENSOR PROGRAM SCHEDULE:

SENSOR TYPE	ON CONTROL	OFF CONTROL	OFF TIME DELAY	TYPICAL ROOM TYPES
ULTRASONIC	SENSOR	MANUAL/SENSOR	AUTO OFF AFTER 15 MINUTES	PUBLIC RESTROOMS
INFRARED	SENSOR	MANUAL/SENSOR	AUTO OFF AFTER 15 MINUTES	OFFICES
	SENSOR	SENSOR	AUTO OFF AFTER 5 MINUTES	SCRUB SINK
DUAL TECHNOLOGY	SENSOR	MANUAL/SENSOR	AUTO OFF AFTER 15 MINUTES	CONFERENCE ROOMS/LARGE OFFICES

OCCUPANCY SENSOR PROGRAM SCHEDULE

NOT TO SCALE — 1

FOR CONSTRUCTION

FULLY SPRINKLERED

FINAL CD SUBMISSION - FOR CONSTRUCTION	07-11-12
Revisions:	Date

CONSULTANTS:

STATE OF OHIO — M.P. LONG 59459 — REGISTERED PROFESSIONAL ENGINEER — 12026

ARCHITECT/ENGINEERS:

MAKOVICH & PUSTI ARCHITECTS, INC.
111 FRONT STREET BEREA, OHIO 44017
(440) 893-0910 p (440) 893-0086 f

FREDRICK, FREDRICK & HELLER ENGINEERS, INC.
670 EAST ROYALTON ROAD
BROADVIEW HTS., OHIO 44147
TEL (440) 526-1936
FAX (440) 543-3030

Drawing Title: ELECTRICAL DETAILS

Approved: Project Director

Project Title: VAMC WADE PARK CLEVELAND DIETETICS ADMIN SPACE AND STORAGE

Location: 10701 EAST BLVD, CLEVELAND, OHIO 44106

Date: 07-11-12 | Checked By: MPL | Drawn By: JDM

Project Number: 541-12-113

Building Number: 1

Drawing Number: 1-E10

Office of Construction and Facilities Management

Department of Veterans Affairs

VA FORM 08–6231

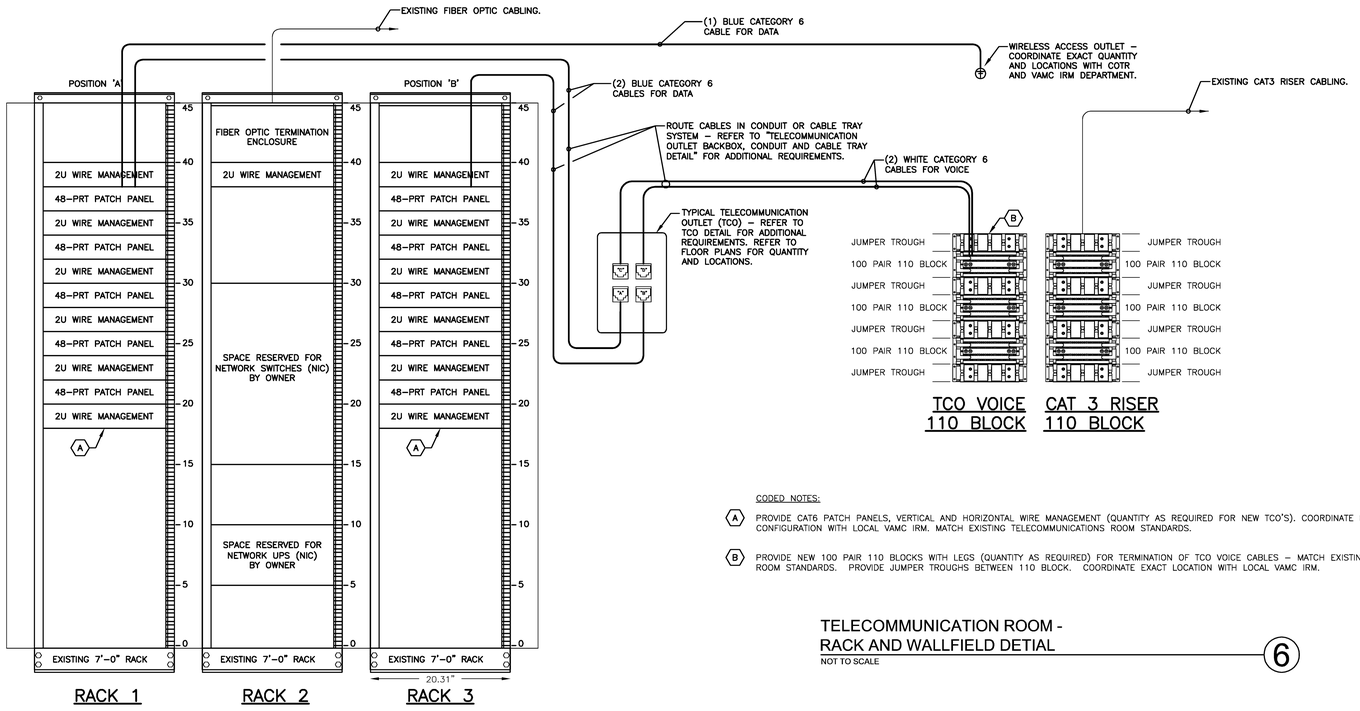

CODED NOTES:

(A) PROVIDE CAT6 PATCH PANELS, VERTICAL AND HORIZONTAL WIRE MANAGEMENT (QUANTITY AS REQUIRED FOR NEW TCO'S). COORDINATE EXACT LOCATION AND CONFIGURATION WITH LOCAL VAMC IRM. MATCH EXISTING TELECOMMUNICATIONS ROOM STANDARDS.

(B) PROVIDE NEW 100 PAIR 110 BLOCKS WITH LEGS (QUANTITY AS REQUIRED) FOR TERMINATION OF TCO VOICE CABLES – MATCH EXISTING TELECOMMUNICATION ROOM STANDARDS. PROVIDE JUMPER TROUGHS BETWEEN 110 BLOCK. COORDINATE EXACT LOCATION WITH LOCAL VAMC IRM.

TELECOMMUNICATION ROOM - RACK AND WALLFIELD DETIAL (6)
NOT TO SCALE

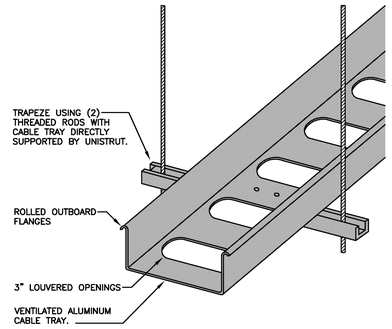

GENERAL NOTES:
1. PROVIDE SUPPORT SPACING FOR THE FULL CABLE CAPACITY OF THE CABLE TRAY.

TELECOMMUNICATION CABLE TRAY DETAIL (5)
NOT TO SCALE

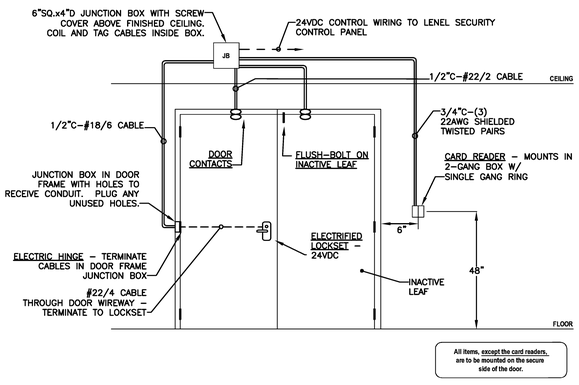

(02) ACCESS-CONTROLLED DOOR TYPE 2 DETAIL (4)
NOT TO SCALE

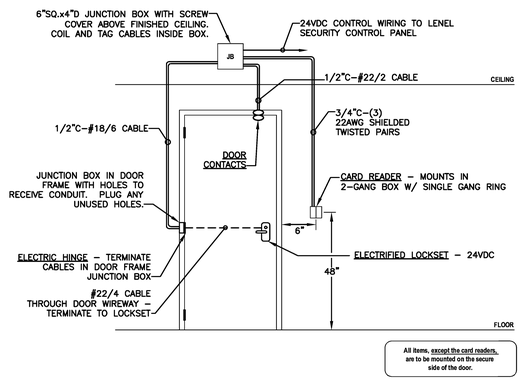

(01) ACCESS-CONTROLLED DOOR TYPE 1 DETAIL (3)
NOT TO SCALE

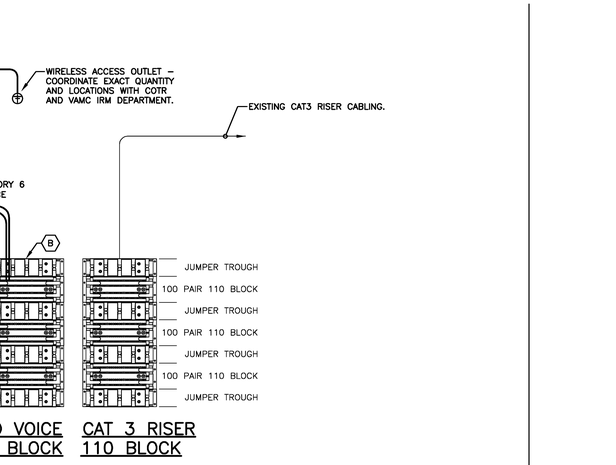

GENERAL NOTES:
1. PROVIDE 1-PORT WALLPLATE FOR WALL TELEPHONE OUTLET "W" AND ROLL BACK UNTERMINATED DATA CABLES IN JUNCTION BOX.
2. COORDINATE LABELING SEQUENCE AND FORMAT WITH VA COTR.

TELECOMMUNICATION OUTLET (TCO) DETAIL (2)
NOT TO SCALE

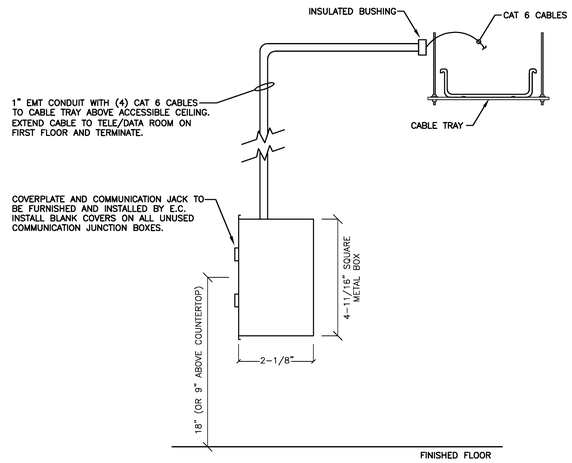

TELECOMMUNICATION OUTLET BACKBOX, CONDUIT AND CABLE TRAY DETAIL (1)
NOT TO SCALE

FOR CONSTRUCTION

FULLY SPRINKLERED

FINAL GD SUBMISSION - FOR CONSTRUCTION	07-11-12
Revisions:	Date

CONSULTANTS:

STATE OF OHIO M.P. LONG 59459 REGISTERED PROFESSIONAL ENGINEER
12026

ARCHITECT/ENGINEERS:

MAKOVICH & PUSTI ARCHITECTS, INC.
111 FRONT STREET BEREA, OHIO 44017
(440) 891-8910 p (440) 891-0386 f

FREDRICK, FREDRICK & HELLER ENGINEERS, INC.
672 CLAY STATION ROAD
STRONGSVILLE, OHIO 44149
TEL (440) 846-9696
FAX (440) 846-9699

Drawing Title: TECHNOLOGY DETAILS	Project Title: VAMC WADE PARK CLEVELAND DIETETICS ADMIN SPACE AND STORAGE		Project Number: 541-12-113
			Building Number: 1
Approved: Project Director	Location: 10701 EAST BLVD, CLEVELAND, OHIO 44106		Drawing Number: 1-E11
	Date: 07-11-12	Checked By: MPL / Drawn By: JDM	

Office of Construction and Facilities Management
Department of Veterans Affairs

VA FORM 08-6231

GENERAL FIRE ALARM SYSTEM NOTES:

F1. ALL FIRE ALARM SYSTEM DEVICES SHALL BE CONNECTED COMPLETE TO THE MAIN FIRE ALARM SYSTEM CONTROL PANEL IN ACCORDANCE WITH ENGINEER APPROVED MANUFACTURER'S SHOP DRAWING WIRING DIAGRAMS AND DETAILS.

F2. ALL FIRE ALARM SYSTEM CONDUCTORS SHALL BE INSTALLED IN 3/4" MINIMUM SIZE CONDUIT SYSTEM.

F3. COORDINATE FIRE ALARM ZONES WITH SMOKE COMPARTMENTS AND SPRINKLER ZONES. STROBES SHALL ACTIVATE ONLY IN THE ZONE OF ALARM ORIGIN. PROVIDE ONE SPEAKER CIRCUIT PER SMOKE ZONE.

F4. CONTRACTOR SHALL CONNECT ALL NEW FIRE ALARM DEVICES IN THIS PROJECT TO (1) ADDRESSABLE POWER EXTENDER OUTPUT CIRCUIT OR (1) DIGITAL AUDIO AMPLIFIER OUTPUT CIRCUIT.

FIRE ALARM RISER CODED NOTES:

(1) FIRE ALARM CONTROL PANEL:
EXISTING NOTIFIER OYNX SERIES NFS-3030 IN BASEMENT D22 ELECTRONICS SHOP.

(2) NOTIFICATION APPLIANCE CIRCUIT EXTENDER (NACX) :
PROVIDE COMPONENTS IN A NOTIFIER SYSTEM CABINET TO PROVIDE NAC's FOR LOCAL DEVICES IN THE AREAS OUTLINED ON THE FIRE ALARM PLANS.

A. ADDRESSABLE POWER EXTENDER
1. COMPATIBLE WITH NOTIFIER 3030
2. MINIMUM (4) OUTPUT CIRCUITS (STROBE #1, STROBE #2, STROBE #3, DOOR HOLDER)
3. BATTERY CHARGER
4. STROBE SYNCHRONIZATION
5. (2)12AH BATTERIES

B. DIGITAL AUDIO AMPLIFIER
1. COMPATIBLE WITH NOTIFIER DVC
2. (4) AUDIO OUTPUTS
3. 75 WATT TOTAL POWER OUTPUT
4. (2)12AH BATTERIES

(3) EXISTING FIRE ALARM TERMINAL CABINET (FATC)
18"SQ X 4"D BOX & HINGED COVER FOR TERMINATION OF F.A. WIRING.
1. EMT KNOCKOUTS (1/2", 3/4", 1", 1-1/4")
2. PROVIDE (2)16 POINT TERMINAL STRIPS RATED FOR 20 AMP MAX 250B (CLASS B/UL), 300V(CSA)
3. TERMINATE ALL F.A. WIRING (INCLUDING SHIELDS).
4. TAG WIRING AT BOTH ENDS (FACP & FATC) WITH FATC AND CIRCUIT INFORMATION.
EXAMPLES: "FATC-1.3" "FATC-1.3"
"SLC #1" "STROBE #1"

(4) NOTIFIER SYSTEM VENDOR SHALL PROVIDE ALL ADDITIONAL COMPONENTS, SOFTWARE, ETC NECESSARY TO EXTEND THE EXISTING NOTIFIER FIRE ALARM SYSTEM AND SATISFY THE GENERAL SCOPE OF THIS PROJECT WHICH IS TO;
1. MAINTAIN EXISTING FIRE ALARM DEVICES OUTSIDE OF PROJECT AREA. REMOVE EXISTING DEVICES IN THE PROJECT AREA AS INDICATED FROM THE EXISTING NOTIFIER SERIES 2020 FACP.
2. PROVIDE NEW FIRE ALARM DEVICES AT BASMENT PROJECT AREA AND CONNECT TO EXISTING NOTIFIER SERIES NFS 3030 FACP VIA NEW FIRE ALARM TERMINAL CABINET "FATC-B.1" AND "NACX-B.1". FIELD VERIFY EXACT ROUTING OF CONDUITS AND WIRING.

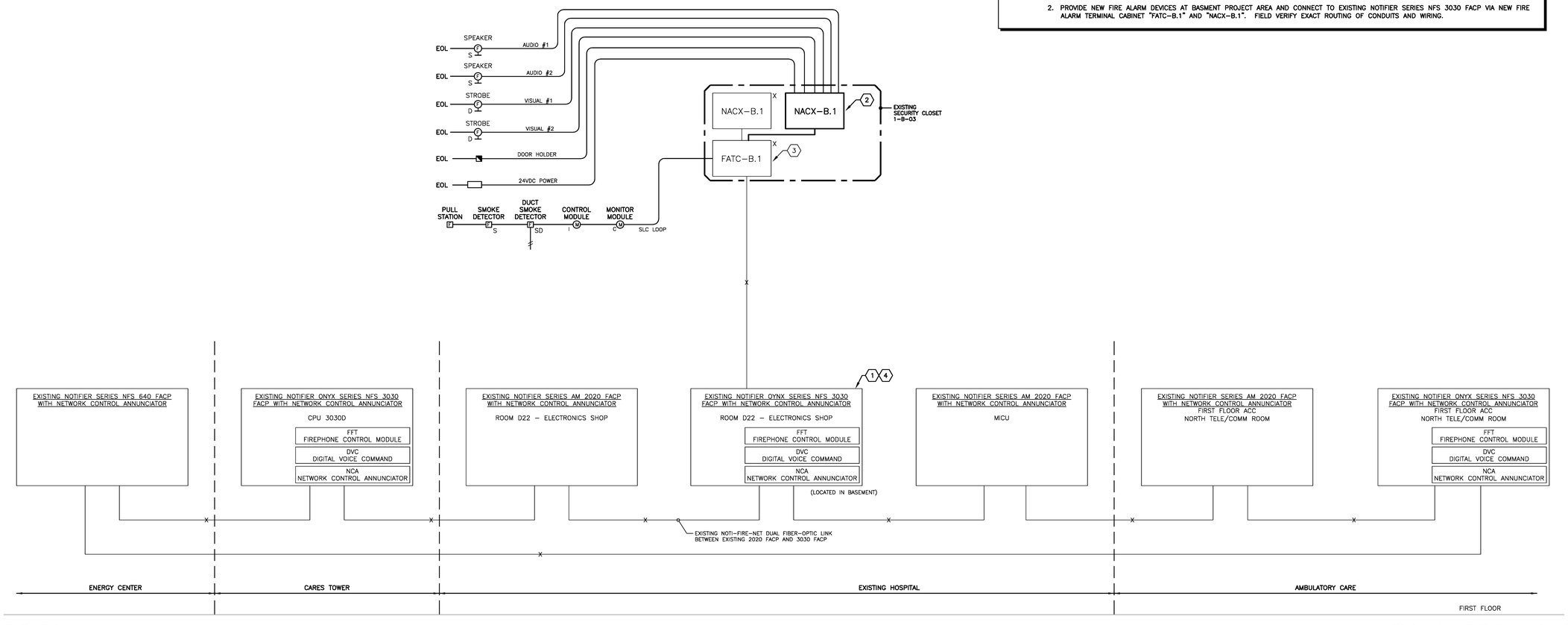

FOR CONSTRUCTION

FULLY SPRINKLERED

FINAL CD SUBMISSION - FOR CONSTRUCTION	07-11-12
Revisions:	Date

CONSULTANTS:

STATE OF OHIO M.P. LONG 59459 REGISTERED PROFESSIONAL ENGINEER
12026

ARCHITECT/ENGINEERS:

MAKOVICH & PUSTI ARCHITECTS, INC.
111 FRONT STREET BEREA, OHIO 44017
(440)891-0010 p (440) 891-0086 f

FREDRICK, FREDRICK & HELLER ENGINEERS, INC.
672 EAST ROYALTON ROAD
BROADVIEW HEIGHTS, OHIO 44147
(440) 526-4888
FAX: (440) 546-3030

Drawing Title: FIRE ALARM SYSTEM RISER	Project Title: VAMC WADE PARK CLEVELAND DIETETICS ADMIN SPACE AND STORAGE		Project Number: 541-12-113
			Building Number: 1
Approved: Project Director	Location: 10701 EAST BLVD, CLEVELAND, OHIO 44106		Drawing Number: 1-E12
	Date: 07-11-12	Checked By: MPL	Drawn By: JDM

Office of Construction and Facilities Management

Department of Veterans Affairs

VA FORM 08-6231

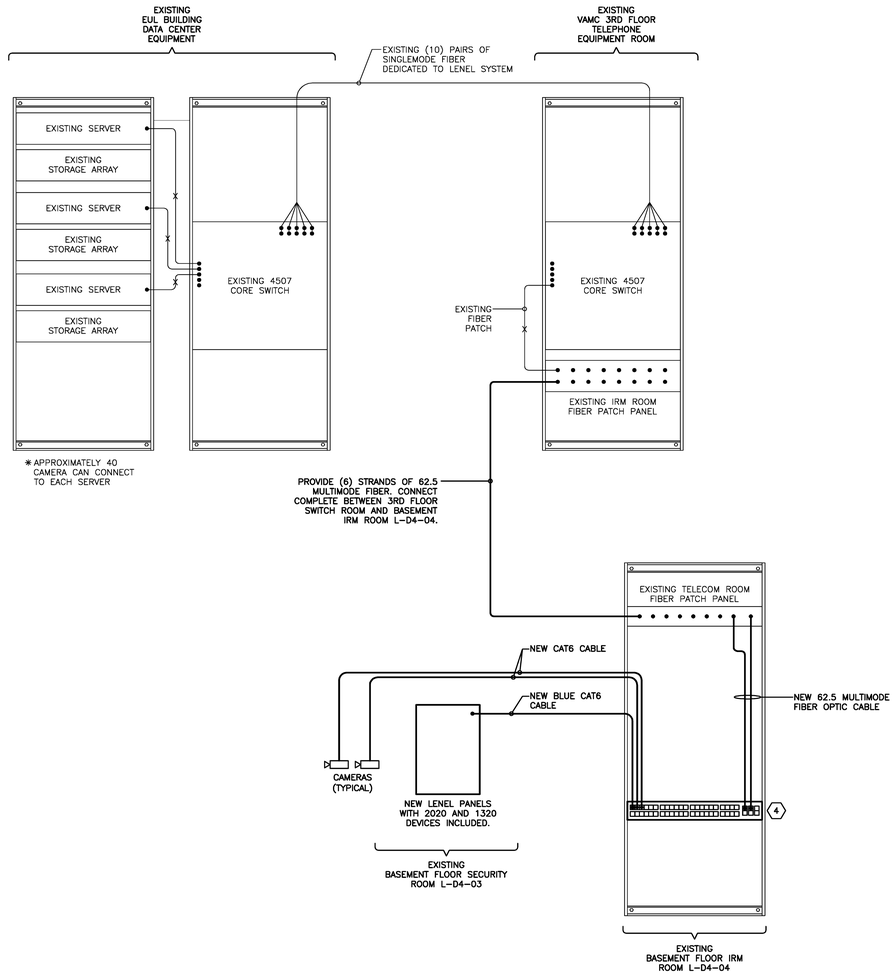

SECURITY SYSTEM RISER (1)
NOT TO SCALE

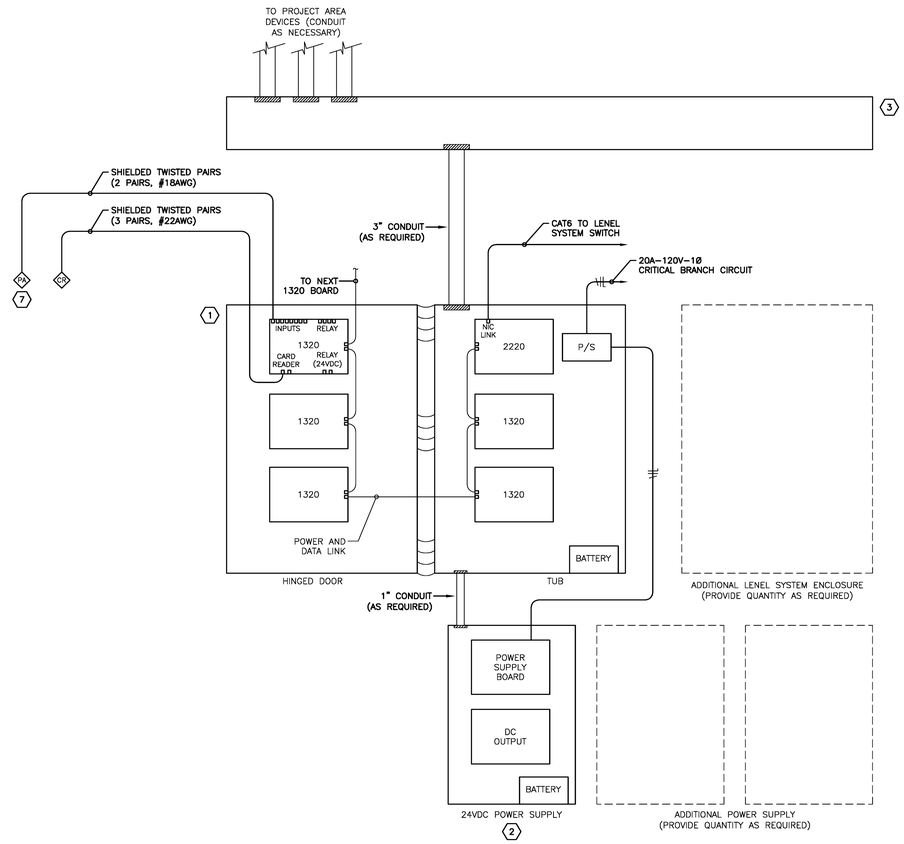

5 6 TELECOMMUNICATION ROOM - WALLFIELD DETIAL (2)
NOT TO SCALE

SECURITY SYSTEM RISER CODED NOTES:

1. LENEL SYSTEM ENCLOSURE
PROVIDE COMPONENTS AS NECESSARY IN A LENEL SYSTEM CABINET TO PROVIDE CONNECTION FOR LOCAL DEVICES IN THE AREAS OUTLINED ON THE COMMUNICATION PLANS.
   A. 18"W x 24"H BOX AND HINGED COVER [MAXIMUM (6) 2020 OR 1320 BOARDS PER BOX]
   B. 12VDC POWER SUPPLY
   C. 7.0 Ah BATTERIES
   D. PROVIDE 2-WIRE RS-485 DATA LINK BETWEEN 2020 AND 1320 PANELS.
   E. PROVIDE 2-WIRE POWER LINK BETWEEN 2020 AND 1320 PANELS.
   F. 2020 MAIN BOARD [(1) 2020 MAIN BOARD IS REQUIRED FOR EVERY (30) 1320 SUB-BOARDS]
      1. NIC LINK TO LENEL NETWORK
      2. (2) CARD ACCESS READER INPUTS
      3. (8) INPUTS
      4. (2) DOOR RELEASE RELAYS
      5. (4) RELAYS
   E. 1320 SUB-BOARD
      1. (2) CARD ACCESS READER INPUTS
      2. (8) INPUTS
      3. (2) DOOR RELEASE RELAYS
      4. (4) RELAYS

2. DOOR HARDWARE POWER SUPPLY
PROVIDE 24VDC POWER SUPPLY IN A SYSTEM CABINET TO PROVIDE POWER TO LOCAL DEVICES IN THE AREAS OUTLINED ON THE COMMUNICATION PLANS.
   1. 12"W x 16"H BOX AND HINGED COVER
   2. (8) FUSED OUTPUTS
   3. 6A TOTAL OUTPUT CURRENT
   4. 40 Ah BATTERY

3. PROVIDE 6"H x 4"D SOLID WALL PVC RACEWAY WITH NON-SLIP FLUSH COVER. RACEWAY SHALL BE LENGTH OF LENEL SYSTEM EQUIPMENT. ROUTE LENEL SYSTEM WIRING THROUGH RACEWAY AND PROVIDE A ORGANIZED ROUTING OF WIRING. PROVIDE ADDITIONAL CONDUITS AND RACEWAY AS REQUIRED.

4. LENEL SYSTEM SWITCH
PROVIDE NEW 48-PORT SWITCH IN EXISTING TELECOMMUNICATIONS ROOM DATA RACK. PROVIDE FIBER PATCH BETWEEN EXISTING TELECOMMUNICATIONS ROOM FIBER PATCH PANEL AND NEW SWITCH. COORDINATE ADDITIONAL REQUIREMENTS WITH VA IRM DEPARTMENT AND SPECIFICATIONS.

5. CONTRACTOR SHALL PROVIDE ALL ADDITIONAL COMPONENTS, SOFTWARE, ETC NECESSARY TO EXTEND THE EXISTING LENEL SECURITY SYSTEM AND SATISFY THE GENERAL SCOPE OF THIS PROJECT WHICH IS TO:
   1. MAINTAIN EXISTING SECURITY DEVICES OUTSIDE OF PROJECT AREA. REMOVE EXISTING DEVICES IN THE PROJECT AREA COMPLETE.
   2. PROVIDE NEW SECURITY DEVICES IN THE PROJECT AREA AND CONNECT COMPLETE TO NEW LENEL 2020 OR 1320 PANELS.
   3. PROVIDE QUANTITY OF PANELS AS REQUIRED TO SUPPORT THE NUMBER OF DEVICES SHOWN ON THE FLOOR PLANS.

6. ADDITIONAL CONDUITS ARE NOT SHOWN FOR CLARITY PURPOSES. CONTRACTOR SHALL ROUTE ALL POWER, SECURITY AND DATA WIRING IN APPROPRIATE CONDUITS.

7. DURESS PANIC ALARM BUTTONS LOCATED AT A DESK SHALL BE CONNECTED THROUGH AN ADJACENT TELECOMMUNICATIONS OUTLET WITH A RED CAT6 WIRE AND NOT A HARD WIRED CONNECTION. PATCH OVER EQUIPMENT TO THE LENEL SYSTEM AT THE TELECOMMUNICATION ROOM PATCH PANELS. PROVIDE HARD WIRED CONNECTION FOR WALL MOUNTED PANIC ALARM BUTTONS NOT LOCATED ADJACENT TO AN OFFICE DESK OR NURSE STATION. VERIFY EXACT LOCATION OF ALL DURESS PANIC ALARM BUTTONS WITH VAMC POLICE.

GENERAL SECURITY SYSTEM NOTES:

S1. ALL SECURITY SYSTEM DEVICES SHALL BE CONNECTED COMPLETE TO THE LENEL SYSTEM IN ACCORDANCE WITH ENGINEER APPROVED MANUFACTURER'S SHOP DRAWING WIRING DIAGRAMS AND DETAILS.

S2. ALL SECURITY SYSTEM CONDUCTORS SHALL BE INSTALLED IN 3/4" MINIMUM SIZE CONDUIT STUBBED TO ABOVE FINISHED CEILING. ROUTE SECURITY SYSTEM CONDUCTORS IN J-HOOKS SPACED AT 5'-0" ON CENTER ABOVE FINISHED CEILING.

S3. REFER TO SPECIFICATIONS SECTIONS IN DIVISION 28 FOR ADDITIONAL REQUIREMENTS.

FOR CONSTRUCTION

FULLY SPRINKLERED

Revisions:	Date
FINAL GD SUBMISSION - FOR CONSTRUCTION	07-11-12

CONSULTANTS:

STATE OF OHIO M.P. LONG 59459 REGISTERED PROFESSIONAL ENGINEER
12026

ARCHITECT/ENGINEERS:

MAKOVICH & PUSTI ARCHITECTS, INC.
111 FRONT STREET BEREA, OHIO 44017
(440) 891-8910 p (440) 891-6386 f

FREDRICK, FREDRICK & HELLER ENGINEERS, INC.
672 CLIFF MORRAINE ROAD
STRONGSVILLE, OHIO 44149
TEL (440) 846-9936
FAX (440) 846-9939

Drawing Title	SECURITY SYSTEM RISER
Approved: Project Director	
Project Title	VAMC WADE PARK CLEVELAND DIETETICS ADMIN SPACE AND STORAGE
Location	10701 EAST BLVD, CLEVELAND, OHIO 44106
Date	07-11-12
Checked By	MPL
Drawn By	JDM
Project Number	541-12-113
Building Number	1
Drawing Number	1-E13

Office of Construction and Facilities Management
Department of Veterans Affairs

VA FORM 08-6231