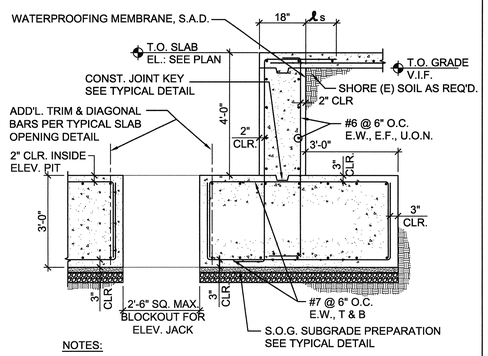

NOTES:

1. COORDINATE SIZE & LOCATION OF SLAB OPNG FOR ELEVATOR JACK & ALL INSERTS WITH ELEVATOR CONTRACTOR.
2. SEE ARCH. DWGS FOR WATERPROOFING.

10 ELEVATOR PIT

N.T.S.

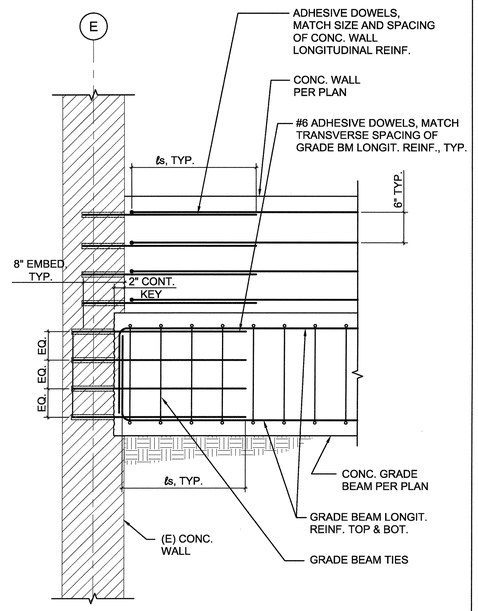

NOTES:

1. ROUGHEN (E) CONCRETE SURFACES TO CONTACT NEW CONCRETE. SEE GENERAL NOTES.
2. CLEAN EXISTING WALL REBAR OF CONCRETE. DO NOT DAMAGE EXISTING WALL REBAR.

8 GRADE BEAM AT (E) WALL

N.T.S.

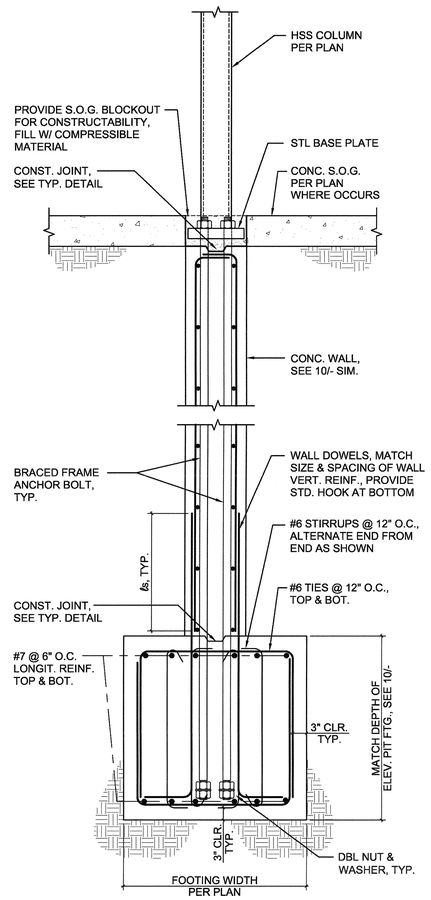

5 GRADE BEAM

N.T.S.

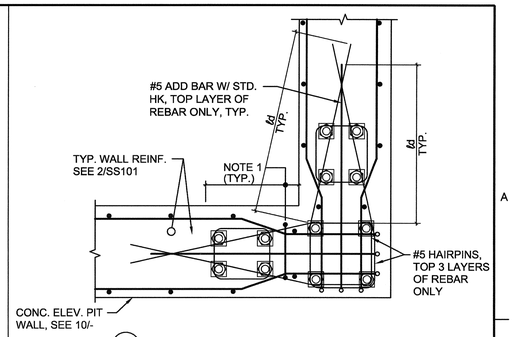

A TOP 3 LAYERS OF REINF. (TOP OF WALL) ONLY

NOTES:

1. PROVIDE #5 TIES @ 6"O.C. OVER TRANSITION ZONE W/IN TOP 6 LAYERS OF HORIZ. REINF. (4 WALL BARS PER CLOSED HOOP)

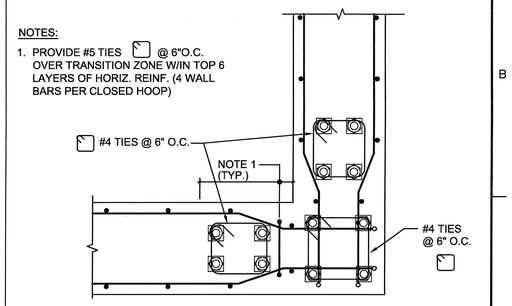

B ALL LAYERS BELOW TOP 3 LAYERS

(SEE A FOR ALL INFO NOT SHOWN)

2 BRACED FRAME ANCHORAGE REINF.

N.T.S.

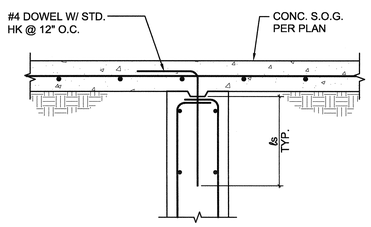

11 SLAB TO WALL CONNECTION

N.T.S.

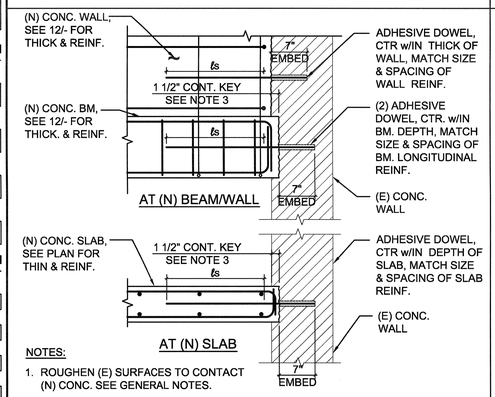

NOTES:

1. ROUGHEN (E) SURFACES TO CONTACT (N) CONC. SEE GENERAL NOTES.
2. LOCATE (E) REINF. PRIOR TO INSTALLATION OF CONT. KEY & ADHESIVE DOWELS. CLEAN (E) REINF. OF CONCRETE. DO NOT CUT/ DAMAGE (E) REBAR.
3. 1 1/2" SHOULD BEAR ON SOLID CONCRETE. 1 1/2" DOES NOT INCLUDE THICKNESS OF EXTERIOR ARCHITECTURAL CONCRETE FINISH.

15 SLAB EXTENSION CONNECTION AT (E) WALL

N.T.S.

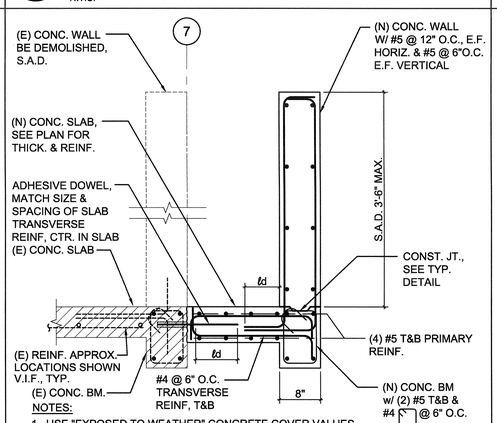

NOTES:

1. USE "EXPOSED TO WEATHER" CONCRETE COVER VALUES FOR WORK REFLECTED IN THIS DETAIL, PER GEN. NOTES.
2. LOCATE (E) REBAR PRIOR TO (E) WALL DEMO & (N) SLAB CONSTRUCTION. DO NOT CUT/DAMAGE (E) REBAR.

12 SLAB EXTENSION

N.T.S.

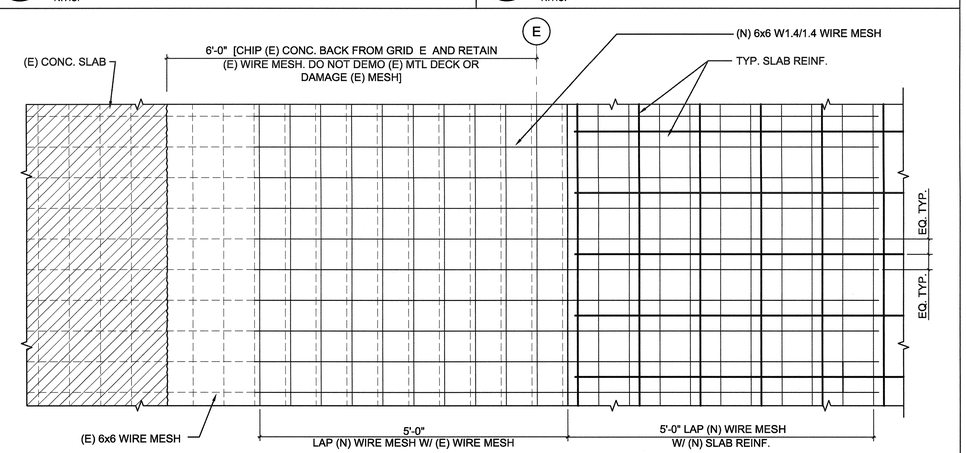

9 TYPICAL (N) TO (E) ROOF SLAB INTERFACE

N.T.S.

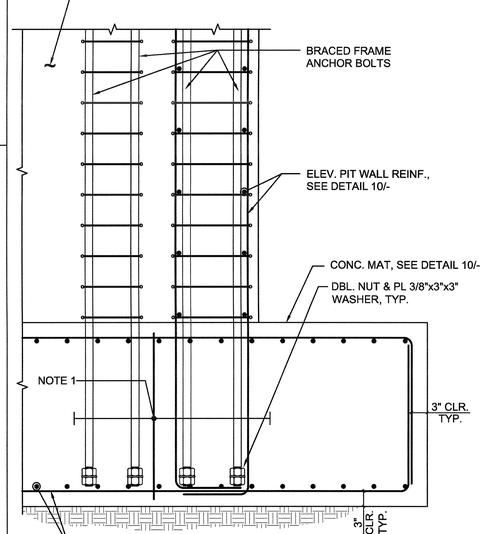

NOTES:

1. PROVIDE #5 TIES @ 12"O.C. OVER MARKED ZONE E.W., (4 MAT BARS PER CLOSED HOOP)

3 EMBEDDED ANCHORAGE AT BRACED FRAME COLUMN

N.T.S.

Revisions	Date

CONSULTANTS:

Degenkolb

DEGENKOLB ENGINEERS
235 Montgomery Street, Suite 500
San Francisco, CA 94104
415.392.6952 Phone
415.981.3157 Fax
www.degenkolb.com
B0584020.00

REGISTERED PROFESSIONAL ENGINEER WILLIAM GROGAN No. 4803 EXP. 6/30/12 STRUCTURAL STATE OF CALIFORNIA

ARCHITECT/ENGINEERS:

HMC Architects

1827 E. Fir Avenue, Studio 103 / Fresno, CA 93720
T 559 322 2444 / www.hmcarchitects.com

LICENSED ARCHITECT Grant Griffith No. C-24697 REN. 07-31-2013 STATE OF CALIFORNIA

Drawing Title: CONCRETE DETAILS	Project Title: BUILDING 24 SEISMIC CORRECTION AND ADDITION		Project Number: 570-215
			Building Number: 24
Approved: Project Director	Location: VAMC FRESNO, CA		Drawing Number: SS501
	Date: January 31, 2012	Checked: WG	Drawn: MAM/KM

Drwg. 29 of 190

Office of Construction and Facilities Management

Department of Veterans Affairs

VA FORM 08-6231