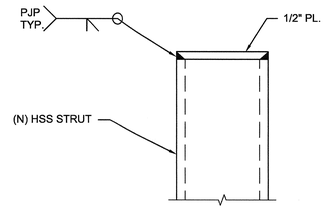

13 HSS CAP PLATE
N.T.S.

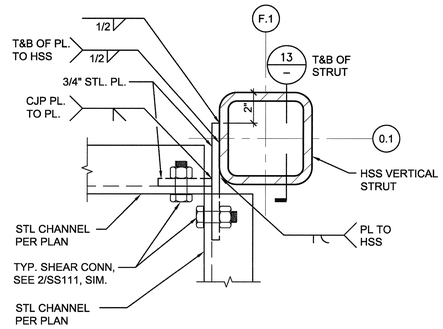

7 CORNER HSS STRUT AT ROOF
N.T.S.

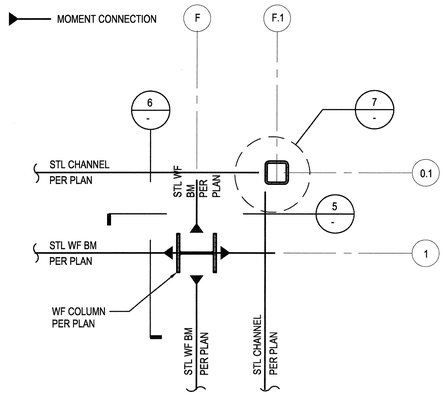

4 PARTIAL ROOF LEVEL PLAN
N.T.S.

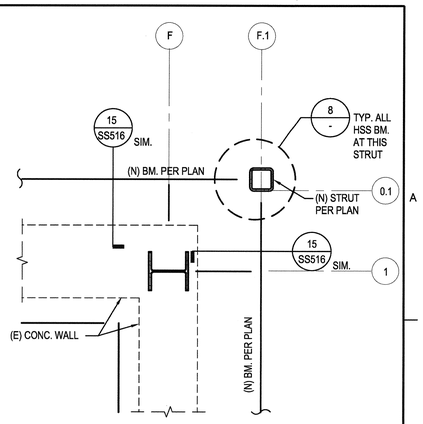

1 PARTIAL 3RD FLOOR PLAN
N.T.S.

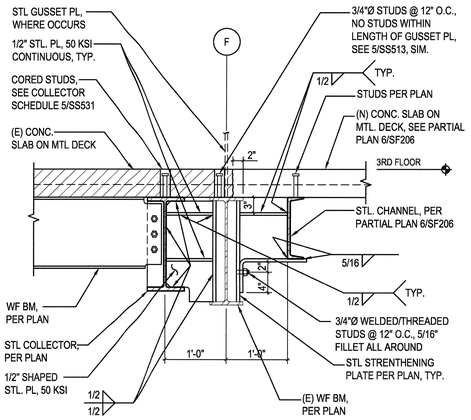

14 (N) BEAM-BEAM SIDE CONNECTION AT FRAME GRIDLINE 'F'
1" = 1'-0"

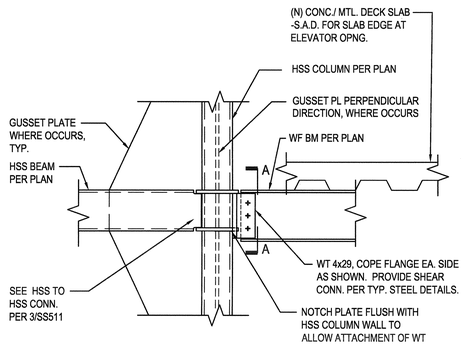

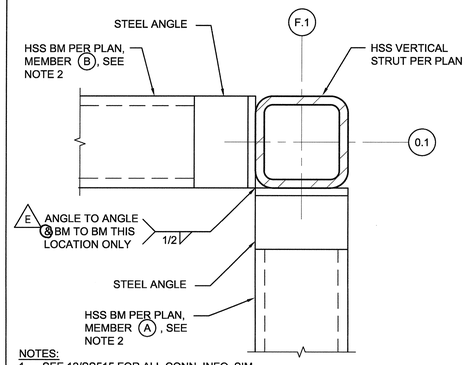

NOTES:
1. SEE 12/SS515 FOR ALL CONN. INFO, SIM.
2. CONNECT MEMBER (A) TO STRUT FIRST, CONNECT MEMBER (B) TO STRUT SECOND. VERTICAL 1/2" FILLET WELD IS IN LIEU OF FLARE BEVEL OF MEMBER (B) TO HSS
3. AESS AS REQUIRED PER GEN. NOTES.

8 CORNER HSS STRUT - TYPICAL BM CONN.
N.T.S.

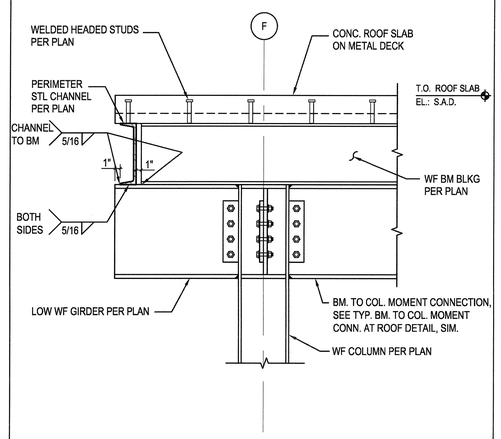

5 PERIMETER CHANNEL CORNER COLUMN, LOOKING SOUTH
1" = 1'-0"

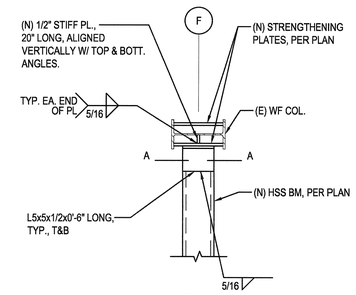

PLAN

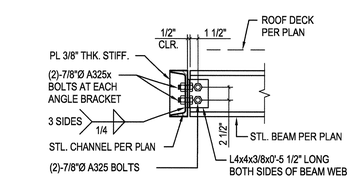

15 SUPPORT BEAM HANGER DETAIL
N.T.S.

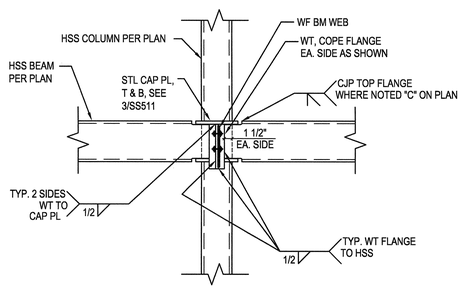

SECTION A-A

NOTES:
1. REFER TO TYPICAL STEEL DETAILS FOR ALL INFO NOT PROVIDED RELATED TO WT SHEAR CONNECTION.

12 WF TO HSS COLUMN DETAIL
N.T.S.

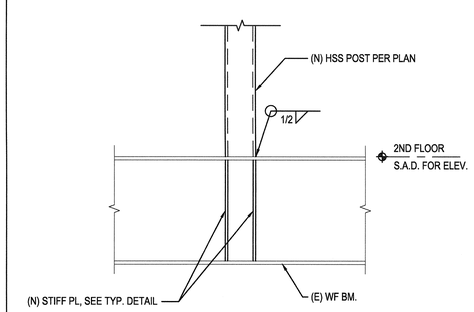

NOTES:
1. SIM. AR 3RD FLOOR, BUT DO NOT PROVIDE STIFF. PL.

9 POST CONNECTION @ (E) BM.
1" = 1'-0"

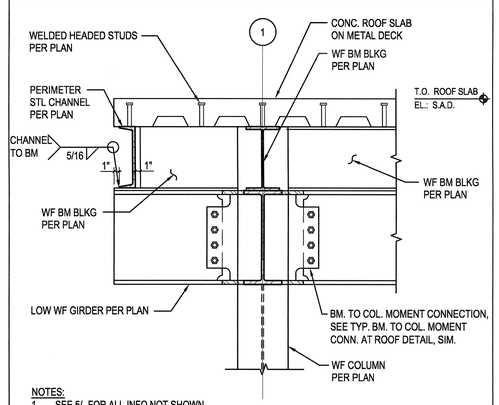

NOTES:
1. SEE 5/- FOR ALL INFO NOT SHOWN.

6 PERIMETER CHANNEL AT CORNER COLUMN, LOOKING EAST
1" = 1'-0"

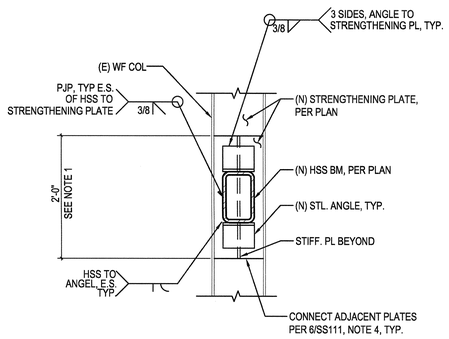

SECTION A-A

NOTES:
1. INSTALL THIS SECTION OF STRENGTHENING PLATE PRIOR TO ADJACENT PLATES ABOVE & BELOW TO ALLOW FOR STIFF. PLATE WELDING

3 HSS TO (E) COLUMN CONNECTION AT SECOND FLOOR
1" = 1'-0"

Revisions	Date

CONSULTANTS:

Degenkolb
DEGENKOLB ENGINEERS
235 Montgomery Street, Suite 500
San Francisco, CA 94104
415.392.6952 *Phone*
415.981.3157 *Fax*
www.degenkolb.com
B0584020.00

REGISTERED PROFESSIONAL ENGINEER WILLIAM GROGAN No. 4803 EXP. 6/30/12 STRUCTURAL STATE OF CALIFORNIA

ARCHITECT/ENGINEERS:

HMC Architects
1827 E. Fir Avenue, Studio 103 / Fresno, CA 93720
T 559 322 2444 / www.hmcarchitects.com

LICENSED ARCHITECT JON ROBERTSON No. C-24897 REN. 07-31-2013 STATE OF CALIFORNIA

Drawing Title	STEEL DETAILS
Approved Project Director	
Project Title	BUILDING 24 SEISMIC CORRECTION AND ADDITION
Location	VAMC FRESNO, CA
Date	January 31, 2012
Checked	WG
Drawn	MAM/KM
Project Number	570-215
Building Number	24
Drawing Number	SS517
Dwg. 36 of 180	

Office of Construction and Facilities Management
Department of Veterans Affairs

VA FORM 08-6231