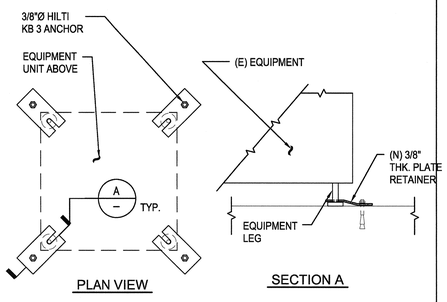

13 LEG ANCHORAGE FOR FLOOR MOUNTED EQUIPMENT

N.T.S.

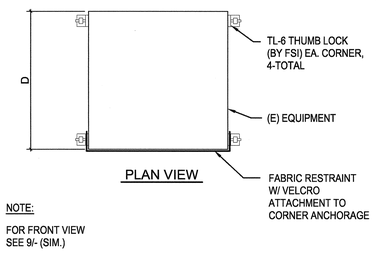

10 WITH-LEGS COUNTER MOUNTED EQUIPMENT ANCHORAGE

N.T.S.

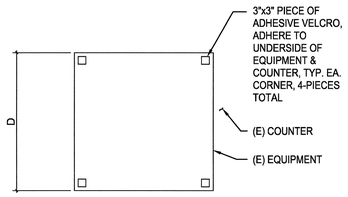

7 LEG LESS COUNTER MOUNTED EQUIPMENT ANCHORAGE

N.T.S.

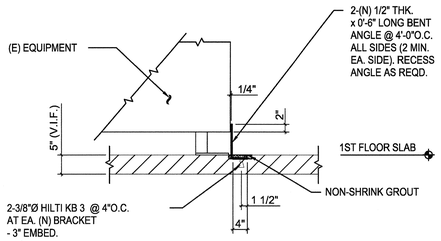

4 (N) BASE SNUBBER DETAIL

N.T.S.

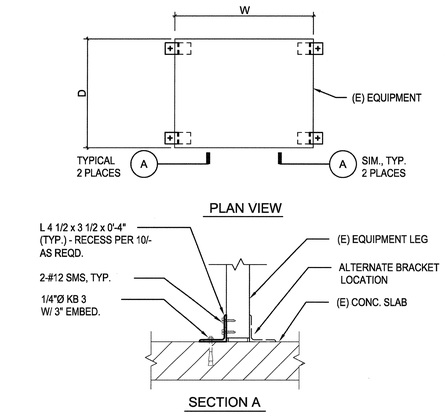

1 LEG ANCHORAGE FOR FLOOR MOUNTED EQUIPMENT

N.T.S.

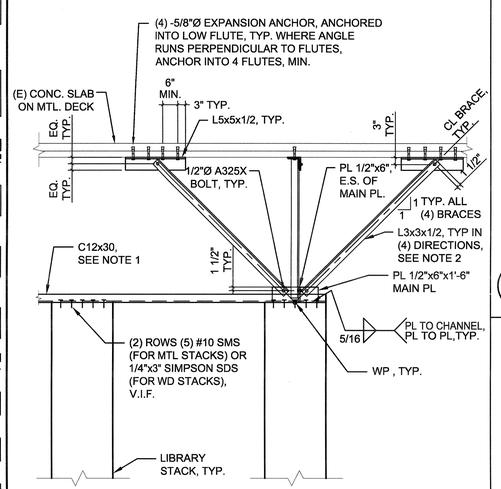

NOTES:

1. CHANNEL IS TO RUN OVER TOP OF ALL STACKS IN A GROUP. PROVIDE (2) CHANNELS, (1) AT EACH END OF STACK ROW. POSITION CL OF CHANNEL 1'-0" FROM EA. END OF STACK.
2. PROVIDE (4) - DIRECTION BRACING DETAIL AT EACH END OF THE (4) CORNERS OF THE STACK GROUP.

15 LIBRARY STACK BRACING

1/2" = 1'-0"

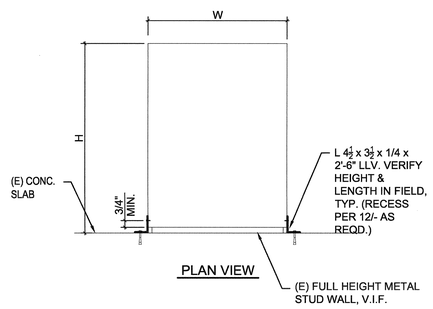

11 GAS BOTTLE ANCHORAGE (WALL)

N.T.S.

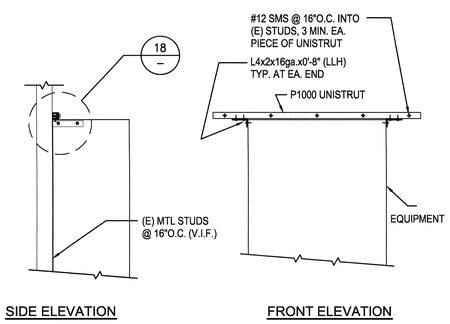

12 EQUIPMENT WALL ANCHORAGE - NO METAL TOP

N.T.S.

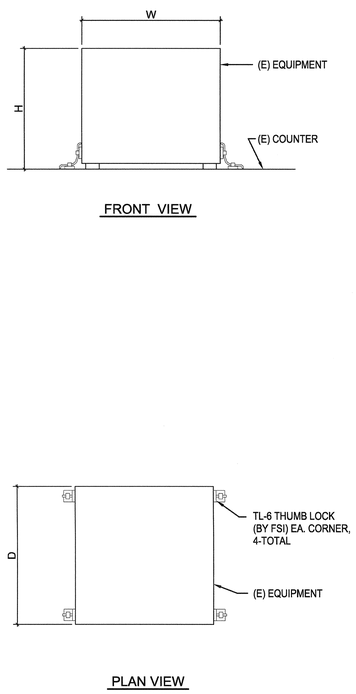

9 WITH-LEGS COUNTER MOUNTED EQUIPMENT ANCHORAGE

N.T.S.

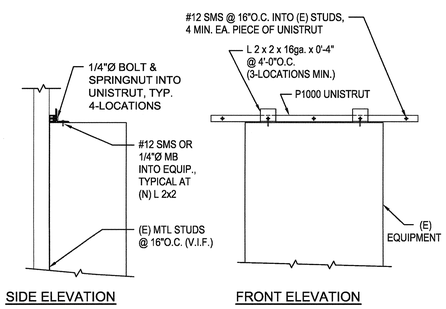

5 EQUIPMENT WALL ANCHORAGE - WITH METAL TOP

N.T.S.

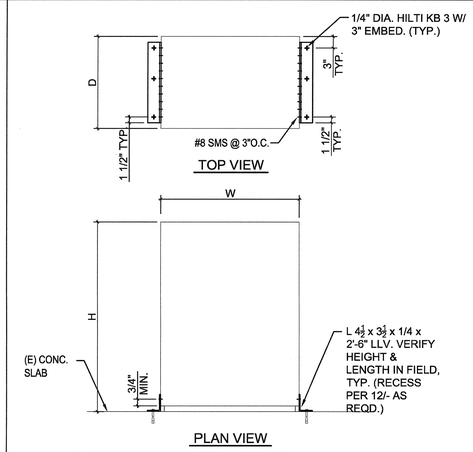

2 LARGE FREE-STANDING EQUIPMENT FLOOR ANCHORAGE

N.T.S.

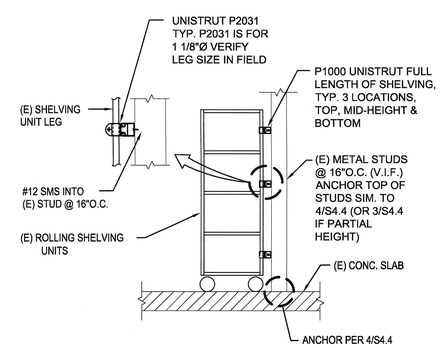

6 ROLLING SHELVING UNIT WALL ANCHORAGE

N.T.S.

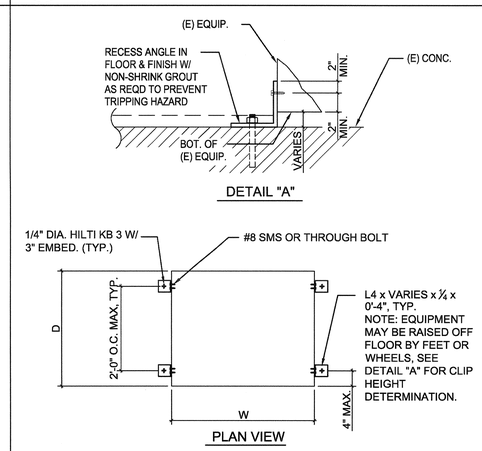

3 TYPICAL ANCHORAGE FOR EQUIPMENT ON FLOOR

N.T.S.

Revisions	Date

CONSULTANTS:

Degenkolb

DEGENKOLB ENGINEERS
235 Montgomery Street, Suite 500
San Francisco, CA 94104
415.392.6952 *Phone*
415.981.3157 *Fax*
www.degenkolb.com
B0584020.00

REGISTERED PROFESSIONAL ENGINEER WILLIAM GROGAN No. 4803 EXP. 6/30/12 STRUCTURAL STATE OF CALIFORNIA

ARCHITECT/ENGINEERS:

HMC Architects

1827 E. Fir Avenue, Studio 103 / Fresno, CA 93720
T 559 322 2444 / www.hmcarchitects.com

LICENSED ARCHITECT Craig M. Chaney No. C-24897 REN. 07-31-2013 STATE OF CALIFORNIA

Drawing Title: NON- STRUCTURAL TYPICAL ANCHORAGE DETAILS	Project Title: BUILDING 24 SEISMIC CORRECTION AND ADDITION		Project Number: 570-215
Approved Project Director	Location: VAMC FRESNO, CA		Building Number: 24
	Date: January 31, 2012	Checked: WG / Drawn: MAM/KM	Drawing Number: SS541
			Dwg. 40 of 80

Office of Construction and Facilities Management

Department of Veterans Affairs

VA FORM 08-6231