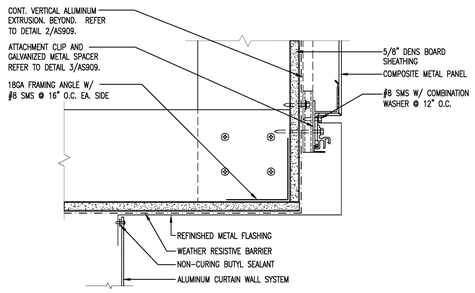

13 ALUMINUM CURTAIN WALL HEAD FLASHING
3" = 1'-0"

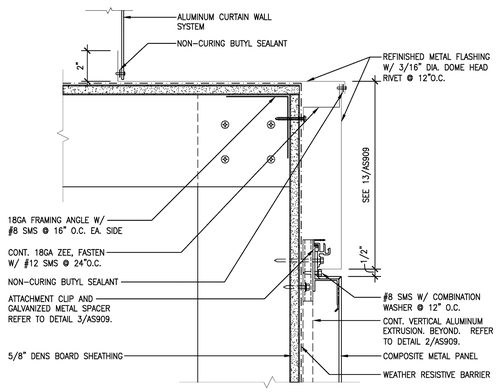

11 ALUMINUM CURTAIN WALL SILL FLASHING
3" = 1'-0"

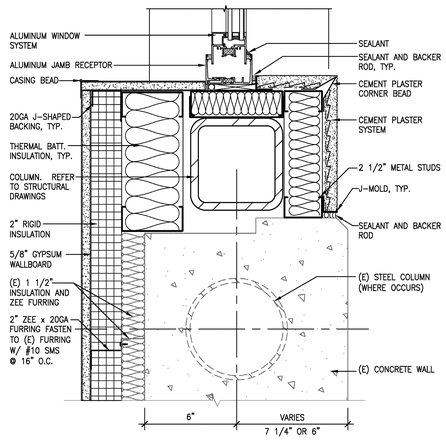

12 JAMB AT ALUMINUM WINDOWS
3" = 1'-0"

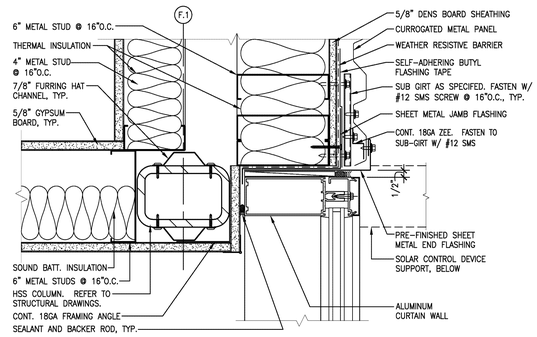

10 ENLARGED COLUMN DETAIL
3" = 1'-0"

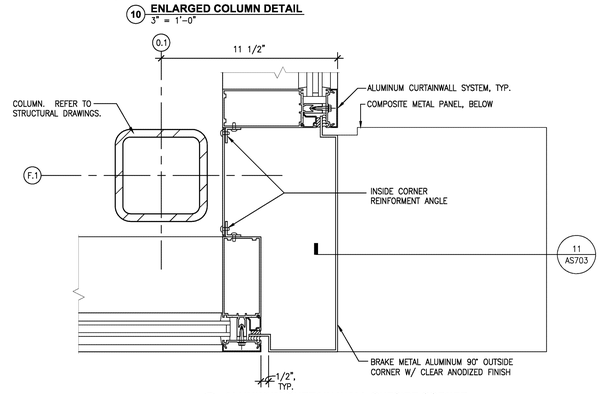

9 ALUMINUM CURTAIN WALL OUTSIDE CORNER
3" = 1'-0"

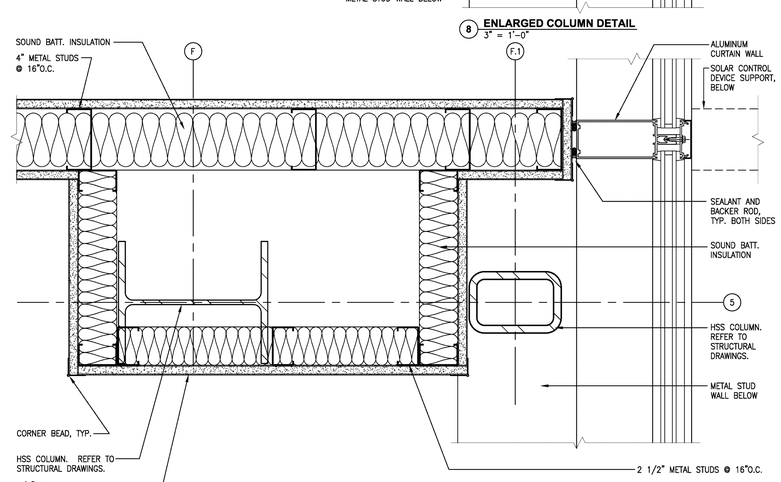

7 ENLARGED COLUMN DETAIL
3" = 1'-0"

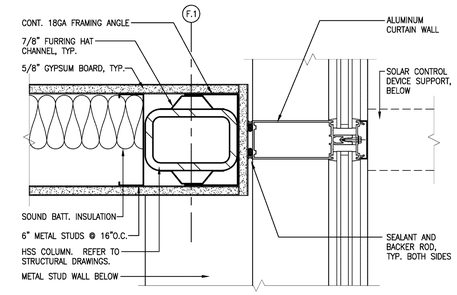

8 ENLARGED COLUMN DETAIL
3" = 1'-0"

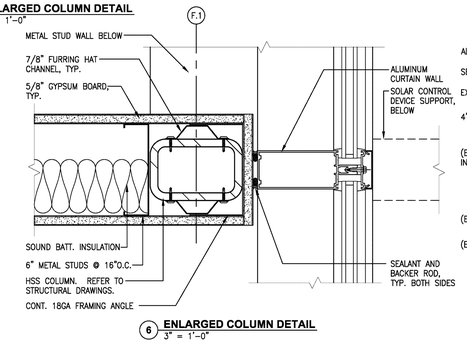

6 ENLARGED COLUMN DETAIL
3" = 1'-0"

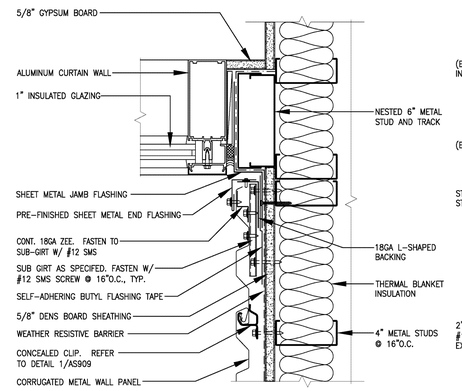

5 JAMB AT ALUMINUM CURTAIN WALL
3" = 1'-0"

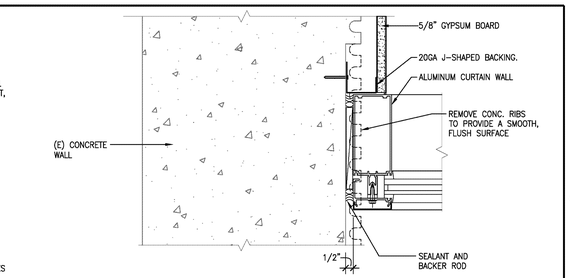

4 JAMB AT ALUMINUM CURTAIN WALL
3" = 1'-0"

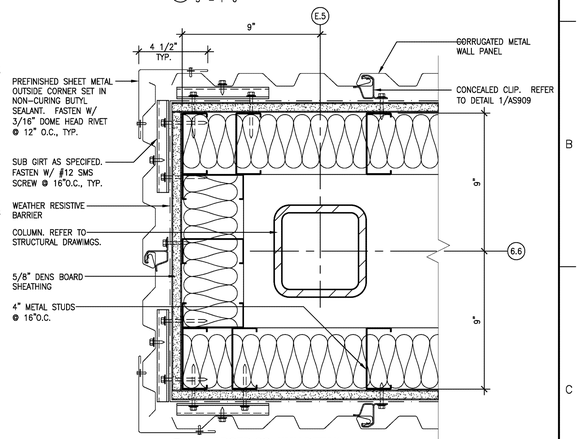

3 ENLARGED COLUMN DETAIL
3" = 1'-0"

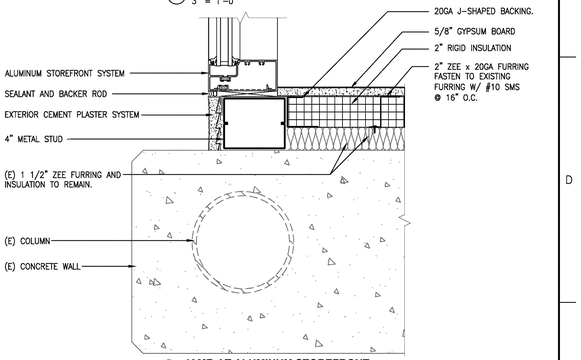

2 JAMB AT ALUMINUM STOREFRONT
3" = 1'-0"

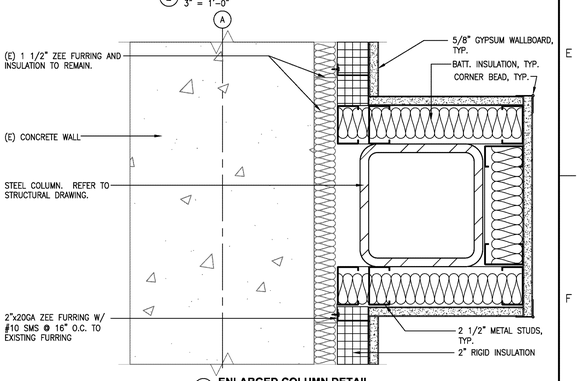

1 ENLARGED COLUMN DETAIL
3" = 1'-0"

Revisions:	Date

CONSULTANTS:

ARCHITECT/ENGINEERS:

HMC Architects
1827 E. Fir Avenue, Studio 103 / Fresno, CA 93720
T 559 322 2444 / www.hmcarchitects.com

Drawing Title: ENLARGED PLAN DETAILS

Approved: Project Director

Project Title: BUILDING 24 SEISMIC CORRECTION AND ADDITION

Location: VAMC FRESNO, CA

Date	Checked	Drawn
October 14, 2011	BB	CLO

Project Number: 570-215

Building Number: 24

Drawing Number: AS703

Dwg. 72 of 180

Office of Construction and Facilities Management

Department of Veterans Affairs

VA FORM 08-6231