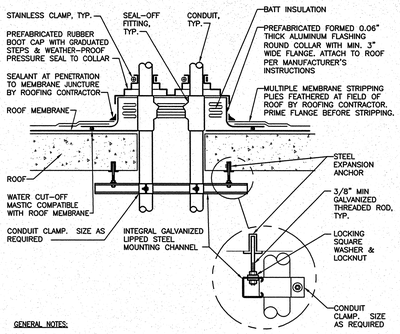

GENERAL NOTES:

1. MAINTAIN A MINIMUM CLEARANCE OF 12" [308mm] ON ALL SIDES OF ROOF PENETRATION FROM WALLS, CURBS, AND OTHER PROJECTIONS TO FACILITATE PROPER FLASHING.
2. FLANGES OF ADJACENT FLASHINGS SHALL NOT BE CUT OR OVERLAPPED.
3. VERIFY ROOF & STRUCTURAL SYSTEM WITH ARCHITECT.
4. COORDINATE FLASHING INSTALLATION WITH ROOFING CONTRACTOR TO ENSURE PROPER METHODS & MATERIALS ARE USED TO MAINTAIN ROOF WARRANTY.

ROOF PENETRATION DETAIL

NTS

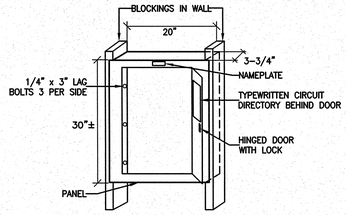

FLUSH PANEL MTG DETAIL

NTS

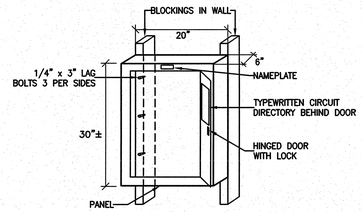

SURFACE PANEL MTG DETAIL

NTS

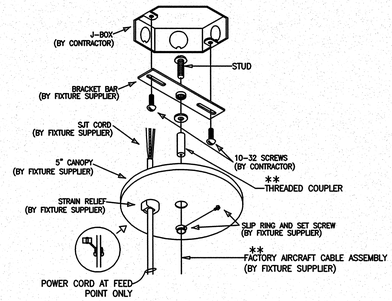

MOUNTING DETAIL AT CEILING

NTS

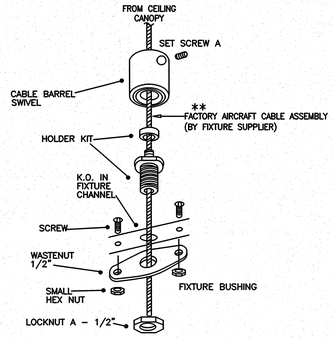

PENDANT MOUNTING DETAIL AT FIXTURE

NTS

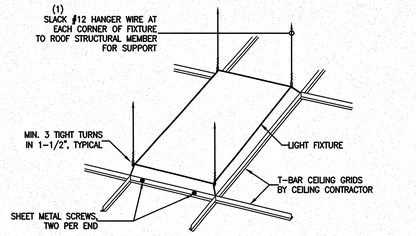

RECESSED FIXTURE MOUNTING DETAIL

NTS

(1) PROVIDE FOUR HANGER WIRES AT OPPOSITE CORNERS FOR HEAVY DUTY RATED CEILING SYSTEM. PROVIDE FOUR HANGER WIRES, ONE AT EACH CORNER, FOR INTERMEDIATE RATED CEILING SYSTEM OR IF THE FIXTURE WEIGHS MORE THAN 56 POUNDS.

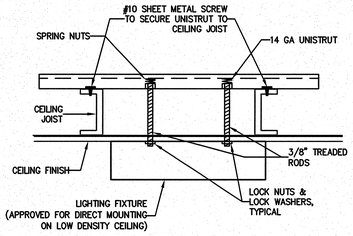

SURFACE FIXTURE MTG

NTS

(FOR CEILING WITH METAL CEILING JOISTS PROVIDE SUPPORT AS INDICATED AT EACH END OF FIXTURE.)

FIXTURE SCHEDULE

ALL FLUORESCENT BALLASTS TO BE ENERGY SAVING TYPES, U.O.N., CERTIFIED PER TITLE 24, SECTION 2-5314(a)
ALL FLUORESCENT LAMPS TO BE ENERGY SAVING TYPES, U.O.N., CERTIFIED PER TITLE 24, SECTION 2-5315(a)

TYPE	WATT	LAMP	VOLT	MANUFACTURER	CATALOG No.	MTG	NOTES
A	34	2F14 T5	277	LITHONIA	2RT5 14T5 MVOLT GEB115S	REC.	
AE	34	2F14 T5	↓	↓	2RT5 14T5 MVOLT GEB115S EL14	↓	
B	55	2F24 T5HO			2RT5 24T5HO MVOLT GEB95S		
BE	55	2F24 T5HO			2RT5 24T5HO MVOLT GEB95S EL14		
C	30	1F28 T5		FOCAL POINT	FAVB FL 1T5 1C 277 S F WH 4FT	FLUSH	
C1	59	2F28 T5			FAVB FL 1T5 1C 277 S G1 WH 8FT		
D	30	1F28 T5			FAVB FL 1T5 1C 277 S G1 WH 4FT	REC.	
DE	30	1F28 T5			FAVB FL 1T5 1C 277 S G1 WH 4FT EM		
E	59	1F54 T5HO			FAVB FL 1T5HO 1C 277 S G1 WH 4FT		
EE	59	1F54 T5HO			FAVB FL 1T5HO 1C 277 S G1 WH 4FT EM		
F4	59	2F28 T5			FAVDS FL 11T5 2C 277 S C24 WH 4'	PEND.	
F8	118	4F28 T5			FAVDS FL 11T5 2C 277 S C24 WH 8'		
F12	177	6F28 T5			FAVDS FL 11T5 2C 277 S C24 WH 12'		
F16	236	8F28 T5			FAVDS FL 11T5 2C 277 S C24 WH 16'		
F24	354	12F28 T5			FAVDS FL 11T5 2C 277 S C24 WH 24'		
G	59	2F28 T5		LITHONIA	AW 2 28 MVOLT GEB10PS		
HE	59	2F28 T5		LUMINAIRE	VAP 228 ELECT 277 CP WHT EMB100	SURF.	
J	28	1F26 TRT		LITHONIA	AF 1/26TRT 6AR MVOLT		
K	58	2F26 TRT			AF 2/26TRT 6AR MVOLT	REC.	
M	58	2F26 TRT		BEGA	67359 277		
N	35	1F32 TRT	120	LITHONIA	SQF 1/32TRT 4AR 120 ADEZ		
NE	35	1F32 TRT			SQF 1/32TRT 4AR 120 ADEZ EL		
P		LED		TIVOLI	CVL 120 U PWR XX	COVE	
AA	350	350 QZ	120	ETC	42550J-1-A SOURC 4	BAR	
X	4	LED	277	LITHONIA	LES1R 120/277 ELN	UNV	
X1	4	LED			LES2R 120/277 ELN		

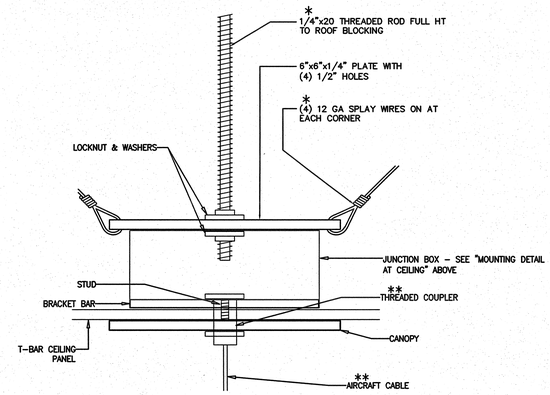

JUNCTION BOX SUPPORT DETAIL AT T-BAR CLG.

NTS

* SEE ARCHITECT/STRUCTURAL DRAWINGS FOR SUPPORT DETAIL TO ROOF STRUCTURE.
** PART OF FACTORY AIRCRAFT CABLE ASSEMBLY.

Revisions:	Date

CONSULTANTS:

REGISTERED PROFESSIONAL ENGINEER — PETER KWAN — E - 10411 ELECTRICAL REN. 09-30-12 — STATE OF CALIFORNIA

LP Consulting Engineers, Inc.
895 W. Ashlan Ave, Suite 101 Clovis, CA 93612
p 559-432-1249 - f 559-432-1625
www.lpengineers.com
Job #: 10-1096

LICENSED ARCHITECT — GARY HIM — No. C-24897 — REN. 07-31-2013 — STATE OF CALIFORNIA

ARCHITECT/ENGINEERS:

HMC Architects
1827 E. Fir Avenue, Studio 103 / Fresno, CA 93720
T 559 322 2444 / www.hmcarchitects.com

Drawing Title: FIXTURE SCHEDULE AND ELECTRICAL DETAILS

Approved Project Director:

Project Title: BUILDING 24 SEISMIC CORRECTION AND ADDITION

Location: VAMC FRESNO, CA

Date: January 31, 2012 | Checked: PK | Drawn: PK/LS

Project Number: 570-215

Building Number: 24

Drawing Number: ES005

Dwg. 155 of 180

Office of Construction and Facilities Management

Department of Veterans Affairs

VA FORM 08-6231