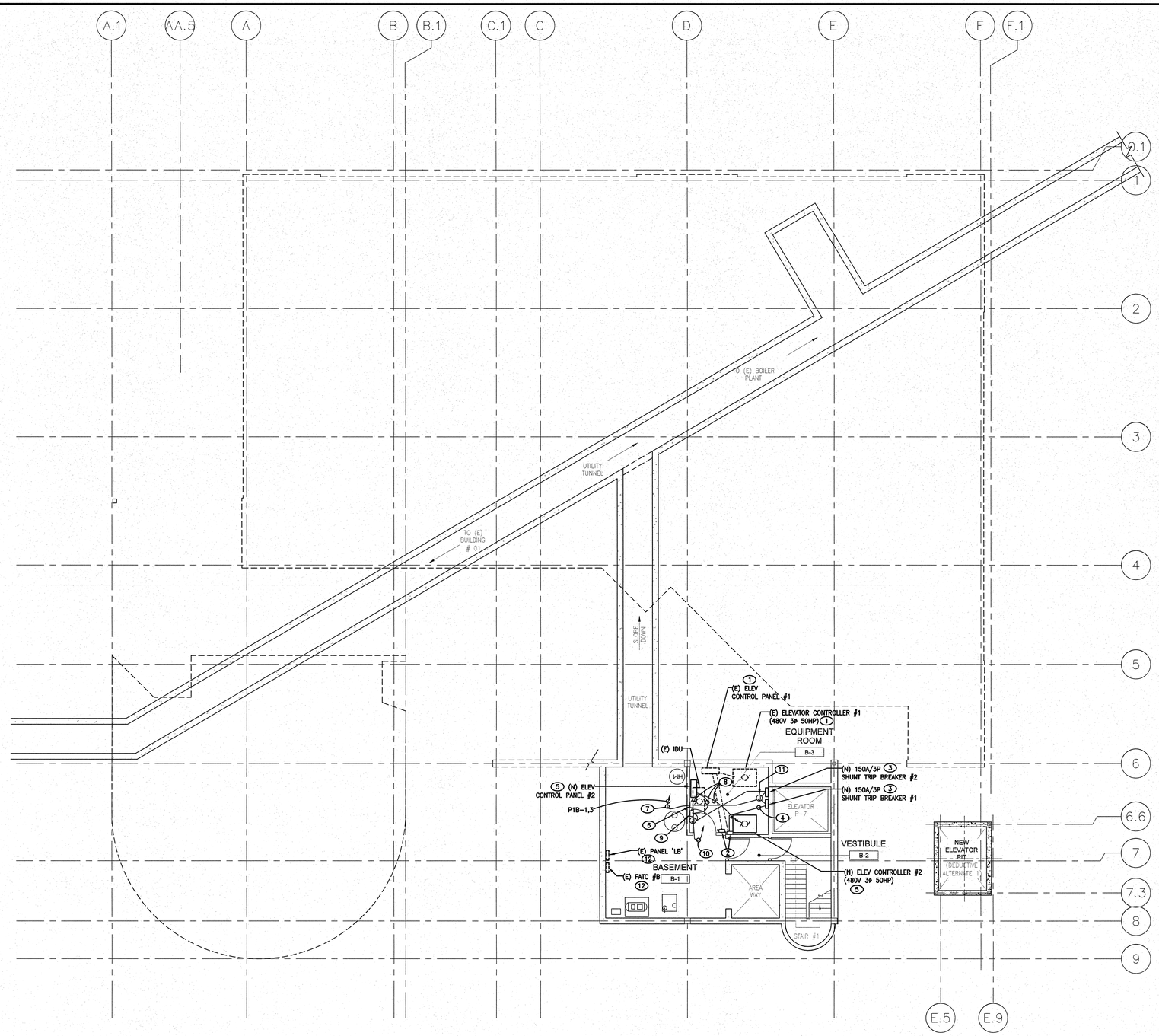


## BASEMENT ELECTRICAL PLAN NOTES:

1. EXISTING ELEVATOR EQUIPMENT, CONTROL PANEL AND RELATED ELECTRICAL TO REMAIN.
2. EXISTING DISCONNECT SWITCH FOR EXISTING ELEVATOR #1 TO REMAIN.
3. PROVIDE NEW 150A/3P SHUNT TRIP BREAKER IN NEMA 1 ENCLOSURE WITH 120V SHUNT TRIP COIL AND AUX CONTACTS, FOR EXISTING ELEVATOR #1.
4. RUN TWO SETS OF 2-1/2"C WITH 3#3/0 + 1#6 GROUND TO CONNECT NEW SHUNT TRIP BREAKER TO EXISTING CIRCUIT.
5. VERIFY CONNECTION LOCATION AND REQUIREMENT OF NEW ELEVATOR IN FIELD WITH SUPPLIER.
6. PROVIDE 150A/3P FUSED DISCONNECT SWITCH WITH AUX CONTACTS PER ELEVATOR SUPPLIER'S REQUIREMENT.
7. RUN FEEDER PER LINE DIAGRAM TO EXISTING MAIN SWITCHBOARD IN FIRST FLOOR ELECTRICAL ROOM. VERIFY ROUTING IN FIELD. PROVIDE PULL BOXES AS REQUIRED.
8. 2-1/2"C WITH 3#3/0 + 1#6 GROUND.
9. PROVIDE 20A/P FUSED DISCONNECT SWITCH PER ELEVATOR SUPPLIER'S REQUIREMENT.
10. HOMERUN TO NEW PANEL "P1B" ON FIRST FLOOR.
11. CONNECT 120V SHUNT TRIP COIL.
12. UNLESS OTHERWISE NOTED, EXISTING ELECTRICAL TO REMAIN.

1 BASEMENT FLOOR ELECTRICAL PLAN
1/8" = 1'-0"

| Revisions: | Date |
|---|---|

CONSULTANTS:

REGISTERED PROFESSIONAL ENGINEER PETER KWAN E-10411 ELECTRICAL REN. 09-30-12 STATE OF CALIFORNIA

LP Consulting Engineers, Inc.
895 W. Ashlan Ave, Suite 101 Clovis, CA 93612
p 559-432-1249 - f 559-432-1625
www.lpengineers.com
Job #: 10-1096

LICENSED ARCHITECT SCOTT GRIFFITH No. C-24897 REN. 07-31-2013 STATE OF CALIFORNIA

ARCHITECT/ENGINEERS:

HMC Architects
1827 E. Fir Avenue, Studio 103 / Fresno, CA 93720
T 559 322 2444 / www.hmcarchitects.com

| | |
|---|---|
| Drawing Title | BASEMENT FLOOR ELECTRICAL PLAN |
| Approved: Project Director | |
| Project Title | BUILDING 24 SEISMIC CORRECTION AND ADDITION |
| Location | VAMC FRESNO, CA |
| Date | January 31, 2012 |
| Checked | PK |
| Drawn | PK/LS |
| Project Number | 570-215 |
| Building Number | 24 |
| Drawing Number | ESB02 Dwg. 165 of 180 |

Office of Construction and Facilities Management

Department of Veterans Affairs

VA FORM 08-6231