MECHANICAL GENERAL NOTES

1. EXISTING DUCTWORK, PIPING AND EQUIPMENT TO REMAIN IS SHOWN LIGHT. NEW DUCTWORK, PIPING AND EQUIPMENT IS SHOWN HEAVY. EXISTING DUCTWORK PIPING AND EQUIPMENT TO BE REMOVED IS SHOWN DASHED. 1
2. ARCHITECTURAL DRAWINGS SHALL BE REVIEWED FOR PROJECT SCOPE AND AREA OF WORK. WORK SHALL INCLUDE DEMOLITION AND REMOVAL OF EXISTING MECHANICAL SYSTEMS AS REQUIRED. MECHANICAL SYSTEMS IN EXISTING WALLS AND UNDER GROUND SHALL BE REMOVED AND CAPPED AS REQUIRED. RECONNECT EXISTING PIPING AND DUCTWORK NOT IN DEMOLITION AREA AS REQUIRED TO MAINTAIN A COMPLETE AND OPERABLE SYSTEM.
3. THE OWNER RESERVES FIRST CHOICE TO KEEP EXISTING EQUIPMENT AND MATERIALS. COORDINATE WITH OWNER AND DELIVER DESIGNATED EQUIPMENT AND MATERIALS REMOVED UNDER THIS CONTRACT TO OWNERS DESINATED STORAGE AREA.
4. UNLESS NOTED OTHERWISE, FLEXIBLE DUCTS TO TERMINAL UNITS, DIFFUSERS AND GRILLES SHALL BE SAME SIZE AS NECK.
5. LENGTH OF FLEXIBLE DUCTWORK SHALL BE LIMITED TO 5'-0" MAXIMUM HORIZONTAL RUN WITH ONLY ONE 90° BEND. SECURE FLEXIBLE DUCTWORK WITH SCREWS AND DRAWBANDS.
6. DUCT SIZES INDICATED ARE NET INSIDE CLEAR DIMENSIONS.
7. PROVIDE GEAR OPERATED CEILING OPERATORS FOR INACCESSIBLE MANUAL VOLUME DAMPERS WITH CEILING ESCUTCHEON AND COVER PLATE. COORDINATE EXACT LOCATION OF COVER PLATE WITH ARCHITECT.
8. ITEM DESIGNATIONS INDICATED ARE FOR PURPOSES OF THESE DOCUMENTS ONLY. CONTRACTOR SHALL VERIFY WITH OWNER ACTUAL "TAGGING" INFORMATION TO BE PROVIDED FOR EACH ITEM OF MECHANICAL EQUIPMENT PRIOR TO NAMEPLATE ORDER RELEASE.
9. THE MECHANICAL DETAILS SHALL BE CONSIDERED AS A PART OF THE CONTRACT DOCUMENTS. THESE DETAILS SHALL BE INCORPORATED INTO THE ASSOCIATED WORK AND PROVIDE GENERAL GUIDANCE AS TO THE INSTALLATION INTENT WHETHER REFERENCED TO OR NOT. IT IS THE CONTRACTOR'S RESPONSIBILITY TO PROVIDE ALL NECESSARY COMPONENTS FOR A COMPLETE INSTALLATION AND ENSURE THAT ALL INSTALLATIONS ARE IN ACCORDANCE WITH THE EQUIPMENT'S LISTING AND THE MANUFACTURER'S WRITTEN INSTALLATION INSTRUCTIONS.
10. REFER TO ARCHITECTURAL REFLECTED CEILING PLANS FOR ACTUAL LOCATION OF GRILLES, DIFFUSERS AND ACCESS PANELS IN CEILING AND FOR DIMENSIONED LENGTHS OF LINEAR DIFFUSERS. COORDINATE DIFFUSER BORDER TYPES WITH CEILING TYPE SCHEDULED IN ARCHITECTURAL REFLECTED CEILING PLANS.
11. TURNING VANES SHALL BE PROVIDED IN ALL SQUARE ELBOW FITTINGS. TURNING VANE RUNNERS SHALL HAVE A VANE IN EVERY SLOT IN STRICT CONFORMANCE WITH MANUFACTURER'S INSTRUCTIONS AND SMACNA DUCT CONSTRUCTION STANDARDS.
12. FIELD VERIFY FIT OF DUCTWORK AND PIPING PRIOR TO FABRICATION.
13. COORDINATE AND VERIFY ACTUAL APPROVED EQUIPMENT DIMENSIONS PRIOR TO POURING CONCRETE EQUIPMENT PADS. COORDINATE EQUIPMENT PAD DIMENSIONS WITH VIBRATION/SEISMIC ISOLATION REQUIREMENT.
14. REFER TO EQUIPMENT DRAWINGS, SPECIFICATIONS AND SHOP DRAWINGS FOR CONNECTION REQUIREMENTS TO EQUIPMENT.
15. MANUAL VOLUME DAMPERS AND VALVES ON INSULATED DUCTWORK AND PIPING SHALL HAVE EXTENDED STEMS TO ALLOW FOR THE INSULATION THICKNESS. PROVIDE MINIMUM 12" LONG RED RIBBON LOCATOR ON VOLUME DAMPER AND VALVE HANDLES.
16. PROVIDE HEAT TRAPS FOR ALL WATER HEATING EQUIPMENT.
17. EQUIPMENT START-UP SHALL BE BY MANUFACTURER'S AUTHORIZED REPRESENTATIVE.
18. SEISMIC RESTRAINTS SHALL BE PROVIDED PER THE 2009 IBC, VA SPECIFICATIONS SECTION 130541, AND THE SMACNA SEISMIC RESTRAINT MANUAL - GUIDELINES FOR MECHANICAL SYSTEMS. THE CONTRACTOR SHALL SUBMIT SHOP DRAWINGS OF THE PROPOSED RESTRAINTS, STRUCTURAL ATTACHMENT METHODS AND RESTRAINT LOCATIONS TO THE ARCHITECT FOR REVIEW AND APPROVAL. THE SUBMITTED DOCUMENTS SHALL BE PREPARED AND STAMPED BY A STRUCTURAL ENGINEER LICENSED IN THE STATE OF NEVADA.
19. INSTALL SPACE SENSORS AT MOUNTING HEIGHT 48" ABOVE FINISHED FLOOR IN ACCORDANCE WITH ADA REQUIREMENTS. COORDINATE EXACT LOCATION IN FIELD WITH GENERAL CONTRACTOR AND ARCHITECT.
20. PROVIDE GATE, BALL, AND BUTTERFLY VALVES FOR SHUT-OFF AND ISOLATION APPLICATIONS. PROVIDE GLOBE AND ANGLE VAVLES FOR BYPASSES AND OTHER APPLICATIONS WHERE THROTTLING MAY BE REQUIRED.
21. MOUNT EQUIPMENT CONTROLLER AND VFDS WITH THE CONTROL INTERFACE BETWEEN 36 AND 72 INCHES AFF.

MECHANICAL ABBREVIATION LIST

(THIS IS A MASTER LIST, NOT ALL ABBREVIATIONS MAY APPEAR ON DRAWINGS)

@	AT
AABC	AMERICAN AIR BALANCE COUNCIL
ABBR	ABBREVIATION
ACD	AUTOMATIC CONTROL DAMPER
AFF	ABOVE FINISH FLOOR
AP	ACCESS PANEL
AUTO	AUTOMATIC
AHU (AH)	AIR HANDLING UNIT
AD	ACCESS DOOR
APD	AIR PRESSURE DROP
AF	AIR FOIL
AFMS	AIR FLOW MEASURING STATION
ACU (AC)	AIR CONDITIONING UNIT
AFUE	ANNUAL FUEL UTILIZATION EFFICIENCY
ASME	AMERICAN SOCIETY OF MECHANICAL ENGINEERS
B	BOILER
BHP	BRAKE HORSE POWER
BTU(/H)	BRITISH THERMAL UNIT (PER HOUR)
BOS	BOTTOM OF STEEL
BOD	BOTTOM OF DUCT
BMS SYSTEM	BUILDING MANAGEMENT
BI	BACKWARD INCLINE
°C	DEGREES CELSIUS
CFM	CUBIC FEET PER MINUTE
CFH	CUBIC FEET PER HOUR
CH	CHILLER
CU	CONDENSING UNIT
CT	COOLING TOWER
CV	CONSTANT VOLUME
CO	CARBON MONOXIDE
CO2	CARBON DIOXIDE
CWP	CONDENSER WATER PUMP
CHWP	CHILLED WATER PUMP
CF	CHEMICAL POT FEEDER
CC	COOLING COIL
CD	CEILING DIFFUSER
COND	CONDENSER
COP	COEFFICIENT OF PERFORMANCE
DIFF	DIFFUSER
DB	DRY BULB TEMPERATURE
dB	DECIBEL
DDC	DIRECT DIGITAL CONTROL
DDCFP	DIRECT DIGITAL CONTROL FIELD PANEL
DC	DIRECT CURRENT
DIA	DIAMETER
DN	DOWN
DX	DIRECT EXPANSION
DS	DUCT SUMP
DOP	DISPERSED OIL PARTICULATE
EMCS	ENERGY MANAGEMENT CONTROL SYSTEM
E	EXISTING
EAT	ENTERING AIR TEMPERATURE
EFF	EFFICIENCY
EWT	ENTERING WATER TEMPERATURE
EXH	EXHAUST
EC	EVAPORATIVE COOLER
EF	EXHAUST FAN
ESP	EXTERNAL STATIC PRESSURE
ET	EXPANSION TANK
EER	ENERGY EFFICIENCY RATIO
EMI	ELECTROMAGNETIC INTERFERENCE
FCU (FC)	FAN COIL UNIT
°F	DEGREES FAHRENHEIT
FB	FAN POWERED BOX UNIT
FPM	FEET PER MINUTE
FPS	FEET PER SECOND
FT	FEET
FM	FLOW METER
FLA	FULL LOAD AMPS
GA	GAUGE
GAL	GALLONS
GC	GENERAL CONTRACTOR
GPM	GALLONS PER MINUTE
GPH	GALLONS PER HOUR
GR	GRILLE V
GBS	GALVANIZED BIRD SCREEN
GEF	GENERAL EXHAUST FAN
HD	HEAD
HP	HORSE POWER
HR	HOUR
HZ	HERTZ
HOA	HAND OFF AUTO
HWP	HOT WATER PUMP
HX	HEAT EXCHANGER
HC	HEATING COIL

IN (")	INCH
IBC	INTERNATIONAL BUILDING CODE
IMC	INTERNATIONAL MECHANICAL BUILDING CODE
IPC	INTERNATIONAL PLUMBING BUILDING CODE
IH	INTAKE HOOD
KW	KILOWATT
LAT	LEAVING AIR TEMPERATURE
LBS	POUNDS
LWT	LEAVING WATER TEMPERATURE
MBH	1000 BRITISH THERMAL UNITS PER HOUR
MAX	MAXIMUM
MC	MECHANICAL CONTRACTOR
MCA	MINIMUM CIRCUIT AMPS
MOCP	MAXIMUM OVER CURRENT PROTECTION
MCC	MOTOR CONTROL CENTER
MIN	MINIMUM
MA	MIXED AIR
MERV	MINIMUM EFFICIENCY REPORTING VALUE
NA	NOT APPLICABLE
NC	NORMALLY CLOSED
NC	NOISE CRITERIA
NO	NORMALLY OPEN
NEBB	NATIONAL ENVIRONMENTAL BALANCING BUREAU
NEC	NATIONAL ELECTRIC CODE
NFPA	NATIONAL FIRE PROTECTION ASSOCIATION
NIC	NOT IN CONTRACT
NTS	NOT TO SCALE
NPT	NATIONAL PIPE TAPER
OED	OPEN END DUCT
OFCI	OWNER FURNISHED CONTRACTOR INSTALLED
PH	PHASE
PA	PRESSURE AVAILABLE
PRV	PRESSURE REDUCING VALVE
PSI	POUND PER SQUARE INCH
PSIA	POUND PER SQUARE INCH ABSOLUTE
PSIG	POUND PER SQUARE INCH GAUGE
PCF	POUND PER CUBIC FOOT
PD	PRESSURE DROP
POS	PROVIDE BY OTHER SECTION
P	PUMP
PCU	POLLUTION CONTROL UNIT
PPM	PARTS PER MILLION
RAD	RADIATED
RPM	REVOLUTIONS PER MINUTE
RH	RELATIVE HUMIDITY
RTU	ROOF TOP UNIT
REFR	REFRIGERANT
RFI	RADIO FREQUENCY INTERFERENCE
SD	SMOKE DAMPER
SP	STATIC PRESSURE
SS	STAINLESS STEEL
SQ FT (SF)	SQUARE FEET
SEF	SMOKE EXHAUST FAN
SF	SUPPLY FAN
SH	STATIC HEAD
SOV	SHUT-OFF VALVE
TF	TRANSFER FAN
TEMP (T)	TEMPERATURE
TAB	TESTING AND BALANCING
TSP	TOTAL STATIC PRESSURE
TYP	TYPICAL
TD	TEMPERATURE DIFFERENCE
TDH	TOTAL DEVELOPED HEAD
TU	TERMINAL UNIT
TCP	TEMPERATURE CONTROL PANEL
TEL	TOTAL EQUIVALENT LENGTH
UMC	UNIFORM MECHANICAL CODE
UPC	UNIFORM PLUMBING CODE
UH	UNIT HEATER
UNO	UNLESS NOTED OTHERWISE
UV	ULTRA VIOLET
VAV	VARIABLE AIR VOLUME
VD	VOLUME DAMPER (MANUAL)
VFD	VARIABLE FREQUENCY DRIVE
V	VOLT
VEL	VELOCITY
W	WATT
WB	WET BULB TEMPERATURE
WG	WATER GAUGE
WMS	WIRE MESH SCREEN
WC	WATER COLUMN
WP	WATER PRESSURE
WPD	WATER PRESSURE DROP
WSHP(WHP)	WATER SOURCE HEAT PUMP
WT	WEIGHT

MECHANICAL SYMBOL LIST

(THIS IS A MASTER LEGEND, NOT ALL SYMBOLS MAY APPEAR ON DRAWING)

ABBR	SYMBOL	DESCRIPTION
	X	SHEET NOTE
	X	REVISION NUMBER
	XX"ø 1	ROUND DUCTWORK (INCHES)
	XX" / XX"	RECTANGLE DUCTWORK (INCHES)
SA		SUPPLY AIR
RA		RETURN AIR
EA		EXHAUST AIR
OA		OUTSIDE AIR
		SUPPLY AIR DUCT UP
		SUPPLY AIR DUCT DOWN
		RETURN AIR DUCT UP
		RETURN AIR DUCT DOWN
		EXHAUST AIR DUCT UP
		EXHAUST AIR DUCT DOWN
		OUTSIDE AIR DUCT UP
		OUTSIDE AIR DUCT DOWN
AD		ACCESS DOOR
		SIDEWALL
		AIR FLOW DIRECTION
		LINED DUCTWORK
		DOUBLE LINE RIGID DUCT
		DOUBLE LINE RIGID DUCT WITH 1-1/2" ACOUSTICAL LINER
FD	F	FUSIBLE LINK FIRE DAMPER
DD	DD	DUCT MOUNTED SMOKE DETECTOR
FSD	FS	COMBINATION FIRE/SMOKE DAMPER
	M	MOTORIZED DAMPER
MVD		MANUAL VOLUME DAMPER
		MVD WITH REMOTE CEILING OPERATOR
OBD		OPPOSED BLADE DAMPER
BDD	BDD	BACKDRAFT DAMPER
CHS	CHS	CHILLED WATER SUPPLY
CHR	CHR	CHILLED WATER RETURN
HS	HS	HOT WATER SUPPLY
HR	HR	HOT WATER RETURN
D	D	DRAIN
ICW	ICW	INDUSTRIAL COLD WATER
PCR	PCR	PUMPED CONDENSATE RETURN
LPS	LPS	LOW PRESSURE STEAM SUPPLY
LPR	LPR	LOW PRESSURE STEAM RETURN
HPS	HPS	HIGH PRESSURE STEAM SUPPLY
HPR	HPR	HIGH PRESSURE STEAM RETURN
PD	PD	PUMPED DRAIN
	1	CONTROL VALVE (2-WAY, 3-WAY)
SOV		SHUT-OFF VALVE
		THROTTLING VALVE
		BALANCING VALVE
		CHECK VALVE
		RELIEF VALVE
		STRAINER WITH BLOWDOWN VALVE
		FLEXIBLE PIPE CONNECTION
		UNION
AV		AIR VENT
		DUCT OR PIPE TRANSITION
PG		PRESSURE GAUGE
TH		THERMOMETER
TW		TEST WELL (PETE'S PLUG)
	FS	FLOW SWITCH
		PIPE DOWN
		PIPE UP
		PIPE TEE UP
		PIPE TEE DOWN
		ANCHOR
		GUIDE
		FLOW ARROW
	T	THERMOSTAT
	S	SPACE TEMPERATURE SENSOR W/ PLUG-IN PORT
	C	CARBON DIOXIDE SENSOR
		POINT OF CONNECTION TO EXISTING
		POINT OF DISCONNECTION FROM EXISTING
		FLEX DUCT

- EQUIPMENT TYPE
- EQUIPMENT NUMBER
- (-) E = EXISTING, D = DEMOLISH, R = RELOATE
- TERMINAL BOX SIZE
- TERMINAL BOX TAG
- (-) CFM/GPM
- SUPPLY DIFFUSER TAG
- (-) CFM/DIRECTION
- RETURN/EXHAUST GRILLE
- (-) CFM
- TERMINAL BOX SIZE
- (-) CFM/GPM
- PLAN
- SHEET

SHEET INDEX

ISSUE			08-15-2012 ADDENDUM 1	05-07-2012 - CD2 Submittal	Sheet Number	SHEET DESCRIPTION
			•	•	M-001	Mechanical Sheet Index, General Notes, Symbol List and Abbreviation List
			•	•	MD-100	Demo Mechanical Plan - Basement Level - Admin
				•	MH-200A	Mechanical Plan - Basement Level - Admin
			•	•	MH-200C	Mechanical Plan - Basement Level - Connector
			•	•	MH-201A	Mechanical Plan - Level 1 - Admin
			•	•	MH-201B	Mechanical Plan - Level 1 - Education Center
			•	•	MH-201C	Mechanical Plan - Level 1 - Connector
			•	•	MH-202A	Mechanical Plan - Level 2 - Admin
				•	MH-202B	Mechanical Plan - Roof - Education Center
			•	•	MH-202C	Mechanical Plan - Level 2 - Connector
			•	•	MH-203A	Mechanical Plan - Level 3 - Admin
				•	MH-203C	Mechanical Plan - Level 3 - Connector
				•	MH-204A	Mechanical Plan - Roof - Admin
				•	MH-300A	Mechanical Zoning Plan - Basement Level - Admin
				•	MH-300C	Mechanical Zoning Plan - Basement Level - Connector
			•	•	MH-301A	Mechanical Zoning Plan - Level 1 - Admin
				•	MH-301B	Mechanical Zoning Plan - Level 1 - Education Center
				•	MH-301C	Mechanical Zoning Plan - Level 1 - Connector
				•	MH-302A	Mechanical Zoning Plan - Level 2 - Admin
				•	MH-302B	Mechanical Zoning Plan - Roof - Education Center
				•	MH-302C	Mechanical Zoning Plan - Level 2 - Connector
			•	•	MH-303A	Mechanical Zoning Plan - Level 3 - Admin
				•	MH-303C	Mechanical Zoning Plan - Level 3 - Connector
				•	MH-304A	Mechanical Zoning Plan - Roof - Admin
			•	•	MP-200A	Mechanical Piping Plan - Basement Level - Admin
				•	MP-200C	Mechanical Piping Plan - Basement Level - Connector
				•	MP-201A	Mechanical Piping Plan - Level 1 - Admin
			•	•	MP-201B	Mechanical Piping Plan - Level 1 - Education Center
				•	MP-201C	Mechanical Piping Plan - Level 1 - Connector
				•	MP-202A	Mechanical Piping Plan - Level 2 - Admin
				•	MP-202B	Mechanical Piping Plan - Roof - Education Center
			•	•	MP-203A	Mechanical Piping Plan - Level 3 - Admin
				•	MP-204A	Mechanical Piping Plan - Roof - Admin
			•	•	M-401	Mechanical - Enlarged Part Plans
			•	•	M-402	Mechanical - Enlarged Part Plans
			•	•	M-501	Mechanical - Details
				•	M-502	Mechanical - Details
				•	M-503	Mechanical - Details
				•	M-504	Mechanical - Details
				•	M-505	Mechanical - Details
				•	M-506	Mechanical - Details
			•	•	M-601	Mechanical - Schedules
			•	•	M-602	Mechanical - Schedules
			•	•	M-603	Mechanical - Schedule
			•	•	M-604	Mechanical - Schedules
			•	•	M-701	Air Flow Overall Isometric
			•	•	M-702	Chilled Water Piping Overall Isometric
			•	•	M-703	Heating Water Piping Overall Isometric
			•	•	M-704	Piping Schematic
				•	M-711	Mechanical Sections - Penthouse
				•	M-712	Mechanical Sections - Basement
				•	M-713	Mechanical Sections
				•	M-714	Mechanical Sections
				•	M-715	Mechanical Sections
				•	M-721	Mechanical Isometric - AHU-1
				•	M-722	Mechanical Isometric - AHU-2
				•	M-723	Mechanical Isometric - AHU-3
				•	M-724	Mechanical Isometric - AHU-4
				•	M-725	Mechanical Isometric - AHU-5
				•	M-726	Mechanical Isometric - AHU-6
				•	M-727	Mechanical Isometric - AHU-7
				•	M-728	Mechanical Isometric - AHU-8
			•	•	M-901	Mechanical - Control Diagrams
			•	•	M-902	Mechanical - Control Diagrams

CONSTRUCTION DOCUMENTS

BUILDING IS FULLY SPRINKLERED

10.0264

Revisions:	Date:
1 ADDENDUM 1	08/15/12

CONSULTANTS:

CIVIL: SLATER HANIFAN GROUP, 5740 S. ARVILLE ST. #216, LAS VEGAS, NV 89118
LANDSCAPE: J W ZUNINO LANDSCAPE ARCHITECTURE, 3191 S. JONES BLVD., LAS VEGAS, NV 89146
MEP: JBA CONSULTING ENGINEERING, 5155 WEST PATRICK LANE, LAS VEGAS, NV 89118
STRUCTURAL: DEGENKOLB ENGINEERING, 235 MONTGOMERY STREET, SUITE 500, SAN FRANSISCO CA 94104
GEOTECHNICAL: NINYO AND MOORE, 6700 PARADISE ROAD, SUITE E, LAS VEGAS, NV 89119
FIRE & LIFE SAFETY: LASALLE ENGINEERING, 1000 YORK ROAD, WILLOW GROVE, PA 19090

KEY PLAN

ARCHITECT/ENGINEERS:

RTKL
JMA ARCHITECTURE STUDIOS
A Joint Venture

Drawing Title: Mechanical Sheet Index, General Notes, Symbol List and Abbreviation List

Scale

Approved: Project Director

Project Title: VA Medical Center - PHASE V, Administration Bldg. & Education Ctr. Addition

Location: North Las Vegas, NV

Date: June 15, 2012 | Checked: MD | Drawn: SM

Project Number: 593CA2202

Building Number: 6

Drawing Number: M-001

Office of Construction and Facilities Management
Department of Veterans Affairs
VA FORM 08-6231

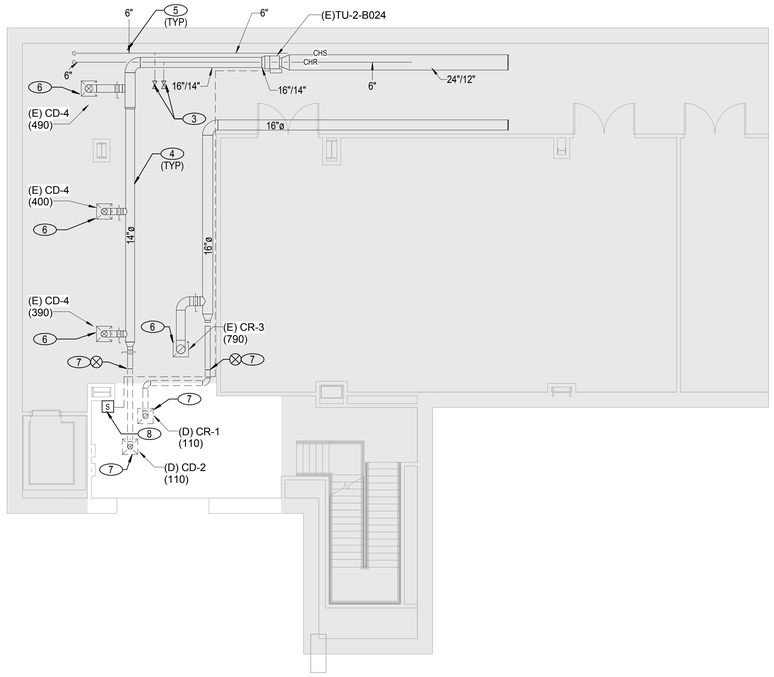

NOTES

1. EXISTING 3" HPS VALVE AND TAP FROM EXISTING SYSTEM.
2. EXISTING 2" PCR VALVE AND TAP FROM EXISTING SYSTEM.
3. EXISTING 6" CHS/R VALVES AND TAP FROM EXISTING SYSTEM.
4. EXISTING DUCTWORK, DAMPERS AND ACCESSORIES TO REMAIN.
5. EXISTING PIPING, VALVES, AND ACCESSORIES TO REMAIN.
6. EXISTING DIFFUSER/GRILLE TO REMAIN. VERIFY AIRFLOW RATE PRIOR TO DEMOLITION. NOTIFY ARCHITECT/ENGINEER OF ANY DISCREPANCIES.
7. REMOVE EXISTING DIFFUSER/GRILLE AND ASSOCIATED DUCTWORK TO POINT INDICATED VERIFY AIRFLOW RATE PRIOR TO DEMOLITION. NOTIFY ARCHITECT/ENGINEER OF ANY DISCREPANCIES.
8. EXISTING SPACE SENSOR TO REMAIN. (1)

1 Demo Mechanical Plan - Basement Level - Admin

1/8" = 1'-0"

CONSTRUCTION DOCUMENTS

BUILDING IS FULLY SPRINKLERED

10.0264

1	ADDENDUM 1	08/15/12
Revisions:		Date:

CONSULTANTS:

CIVIL:	SLATER HANIFAN GROUP, 5740 S. ARVILLE ST. #216, LAS VEGAS, NV 89118
LANDSCAPE:	J W ZUNINO LANDSCAPE ARCHITECTURE, 3191 S. JONES BLVD., LAS VEGAS, NV 89146
MEP:	JBA CONSULTING ENGINEERING, 5155 WEST PATRICK LANE, LAS VEGAS, NV 89118
STRUCTURAL:	DEGENKOLB ENGINEERING, 235 MONTGOMERY STREET, SUITE 500, SAN FRANSISCO CA 94104
GEOTECHNICAL:	NINYO AND MOORE, 6700 PARADISE ROAD, SUITE E, LAS VEGAS, NV 89119
FIRE & LIFE SAFETY:	LASALLE ENGINEERING, 1000 YORK ROAD, WILLOW GROVE, PA 19090

KEY PLAN

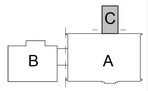

ARCHITECT/ENGINEERS:

RTKL
JMA ARCHITECTURE STUDIOS
A Joint Venture

N TRUE

Drawing Title: Demo Mechanical Plan - Basement Level - Admin

Scale: As indicated

Approved: Project Director: Milan Drašić

Project Title: VA Medical Center - PHASE V, Administration Bldg. & Education Ctr. Addition

Location: North Las Vegas, NV

Date: June 15, 2012 | Checked: Checker | Drawn: Author

Project Number: 593CA2202

Building Number: 6

Drawing Number: MD-100

259 of 512

Office of Construction and Facilities Management

Department of Veterans Affairs

VA FORM 08-6231

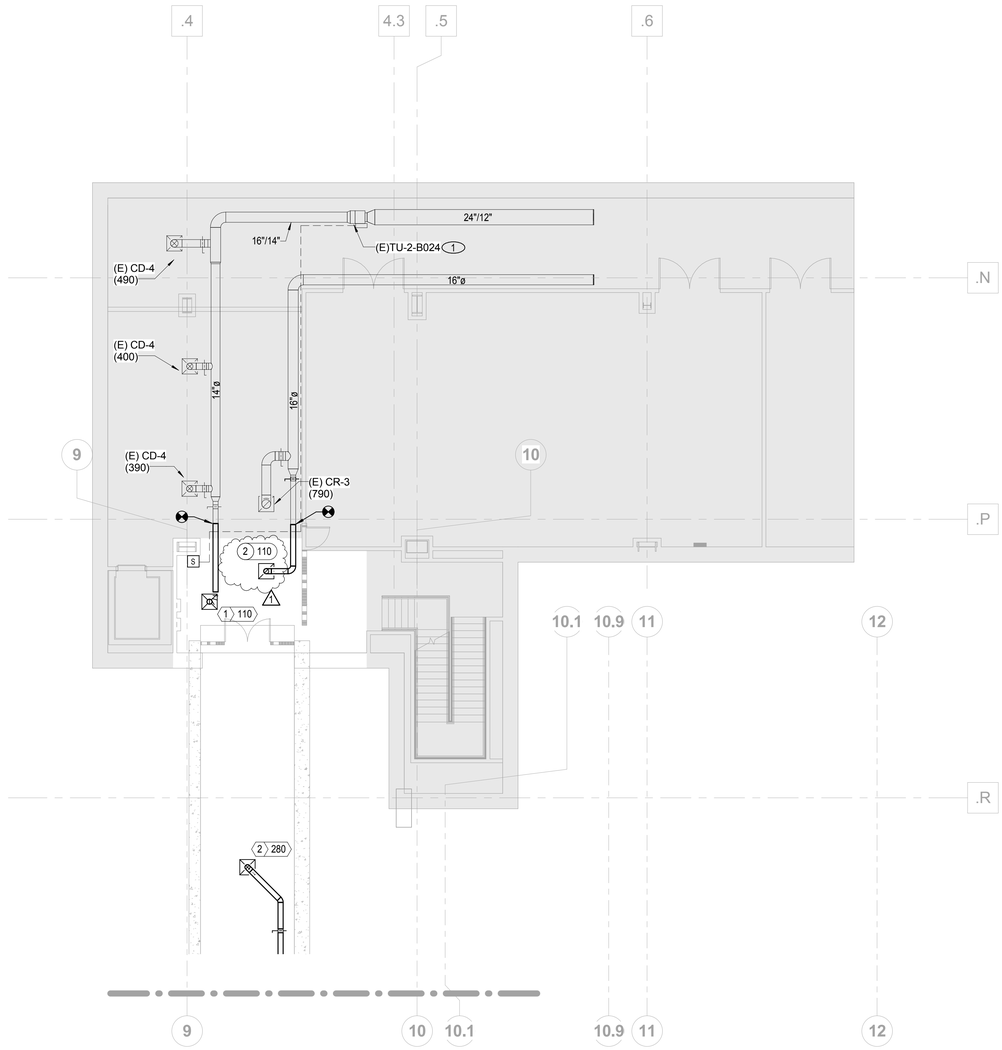

1 Mechanical Plan - Basement Level - Connector

1/8" = 1'-0"

NOTES

1. RE-BALANCE EXISTING VAV BOX TO INDICATED CFM. MODIFY VAV BOX DAMPER POSITION AS REQUIRED.

CONSTRUCTION DOCUMENTS

BUILDING IS FULLY SPRINKLERED

10.0264

1	ADDENDUM 1	08/15/12
Revisions:		Date:

CONSULTANTS:

CIVIL:	SLATER HANIFAN GROUP, 5740 S. ARVILLE ST. #216, LAS VEGAS, NV 89118
LANDSCAPE:	J W ZUNINO LANDSCAPE ARCHITECTURE, 3191 S. JONES BLVD., LAS VEGAS, NV 89146
MEP:	JBA CONSULTING ENGINEERING, 5155 WEST PATRICK LANE, LAS VEGAS, NV 89118
STRUCTURAL:	DEGENKOLB ENGINEERING, 235 MONTGOMERY STREET, SUITE 500, SAN FRANSISCO CA 94104
GEOTECHNICAL:	NINYO AND MOORE, 6700 PARADISE ROAD, SUITE E, LAS VEGAS, NV 89119
FIRE & LIFE SAFETY:	LASALLE ENGINEERING, 1000 YORK ROAD, WILLOW GROVE, PA 19090

KEY PLAN

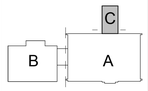

ARCHITECT/ENGINEERS:

RTKL
JMA ARCHITECTURE STUDIOS
A Joint Venture

N TRUE

Drawing Title: Mechanical Plan - Basement Level - Connector

Scale: As indicated

Approved: Project Director: Milan Arsenic

Project Title: VA Medical Center - PHASE V, Administration Bldg. & Education Ctr. Addition

Location: North Las Vegas, NV

Date: June 15, 2012 | Checked: Checker | Drawn: Author

Project Number: 593CA2202

Building Number: 6

Drawing Number: MH-200C

261 of 512

Office of Construction and Facilities Management

Department of Veterans Affairs

VA FORM 08-6231

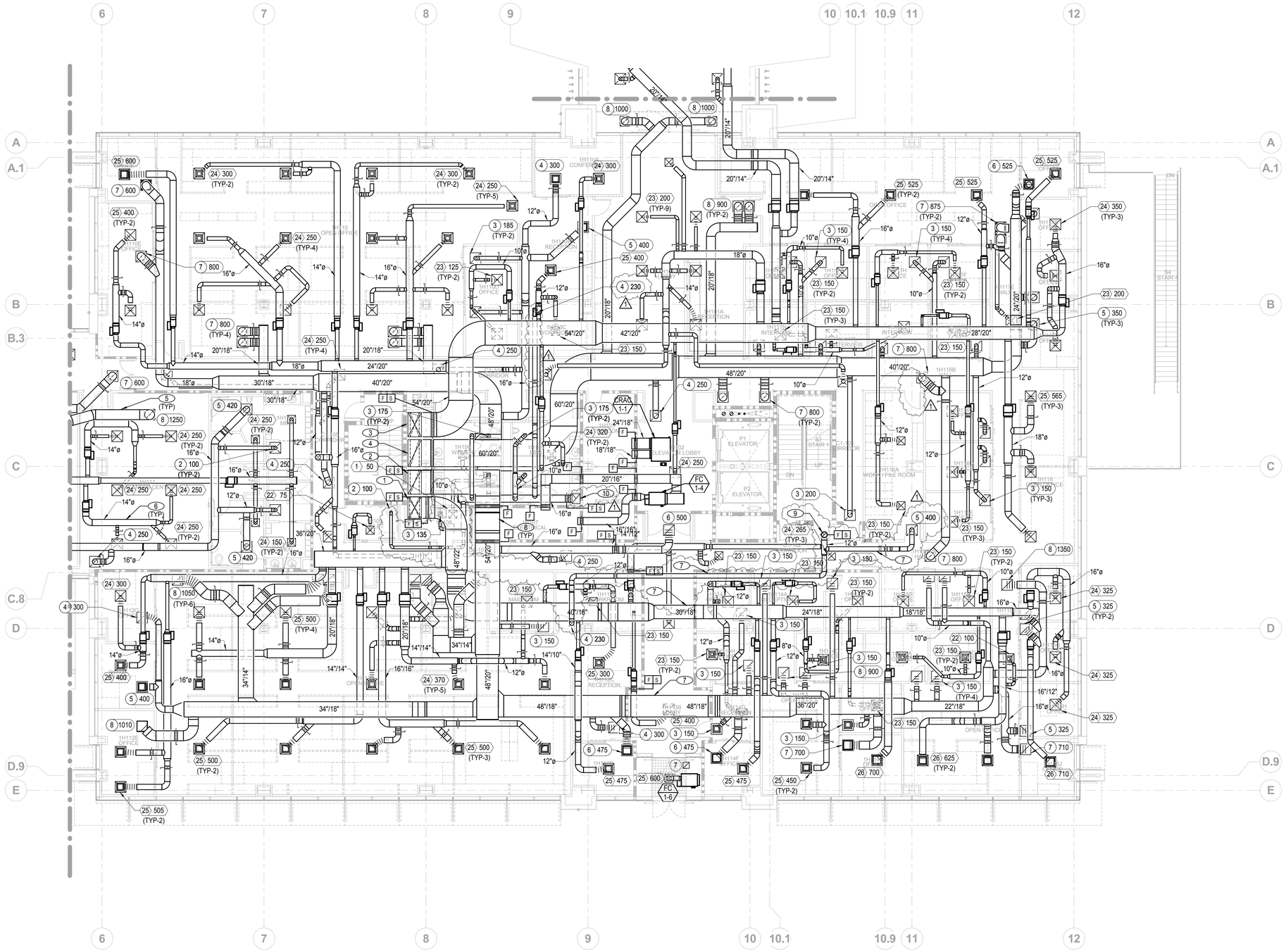

1 Mechanical Plan - Level 01 - Admin

1/8" = 1'-0"

GENERAL NOTE

PLEASE SEE SHEET MH-301A FOR VAV BOX TAGGING AND INFORMATION.

NOTES

1. 48/30 SA DUCT FROM AHU-4. TRANSITION DOWN TO 48/22 IN VERTICAL.
2. 54/20 RA DUCT UP AND TRANSITION TO 54/30 IN VERTICAL UP TO AHU-4.
3. 54/30 SA DUCT FROM AHU-3. TRANSITION DOWN TO 54/20 IN VERTICAL.
4. 60/20 RA DUCT UP AND TRANSITION TO 60/30 IN VERTICAL UP TO AHU-3.
5. PROVIDE PAINTABLE JACKET ON EXTERIOR INSULATION FOR RECTANGULAR DUCTWORK WITHIN THE EXPOSED CEILING AREA. PAINT INSULATION PER ARCHITECTURAL REQUIREMENTS.
6. PROVIDE DOUBLE WALLED INSULATED ROUND DUCTWORK WITHIN THE EXPOSED CEILING AREA. PAINT DUCTWORK PER ARCHITECTURAL REQUIREMENTS.
7. ROUTE DUCTWORK ABOVE RATED TUNNEL CONSTRUCTION.
8. ROUTE DUCTWORK TO MAINTAIN CODE REQUIRED CLEARANCES ABOVE ELECTRICAL EQUIPMENT.
9. 12"Ø EA DUCT UP INTO RATED SHAFT AT LEVEL 2 TO EF-3.
10. 22/18 EA DUCT UP IN RATED SHAFT TO EF-3.

CONSTRUCTION DOCUMENTS

BUILDING IS FULLY SPRINKLERED

10.0264

1	ADDENDUM 1	08/15/12
Revisions:		Date:

CONSULTANTS:

CIVIL: SLATER HANIFAN GROUP, 5740 S. ARVILLE ST. #216, LAS VEGAS, NV 89118
LANDSCAPE: J W ZUNINO LANDSCAPE ARCHITECTURE, 3191 S. JONES BLVD., LAS VEGAS, NV 89146
MEP: JBA CONSULTING ENGINEERING, 5155 WEST PATRICK LANE, LAS VEGAS, NV 89118
STRUCTURAL: DEGENKOLB ENGINEERING, 235 MONTGOMERY STREET, SUITE 500, SAN FRANSISCO CA 94104
GEOTECHNICAL: NINYO AND MOORE, 6700 PARADISE ROAD, SUITE E, LAS VEGAS, NV 89119
FIRE & LIFE SAFETY: LASALLE ENGINEERING, 1000 YORK ROAD, WILLOW GROVE, PA 19090

KEY PLAN

C
B A

ARCHITECT/ENGINEERS:

RTKL
JMA ARCHITECTURE STUDIOS
A Joint Venture

N TRUE

Drawing Title: Mechanical Plan - Level 1 - Admin
Scale: As indicated
Approved: Project Director: Milan Drašić

Project Title: VA Medical Center - PHASE V, Administration Bldg. & Education Ctr. Addition
Location: North Las Vegas, NV
Date: June 15, 2012 | Checked: Checker | Drawn: Author

Project Number: 593CA2202
Building Number: 6
Drawing Number: MH-201A
262 of 512

Office of Construction and Facilities Management
Department of Veterans Affairs

VA FORM 08-6231

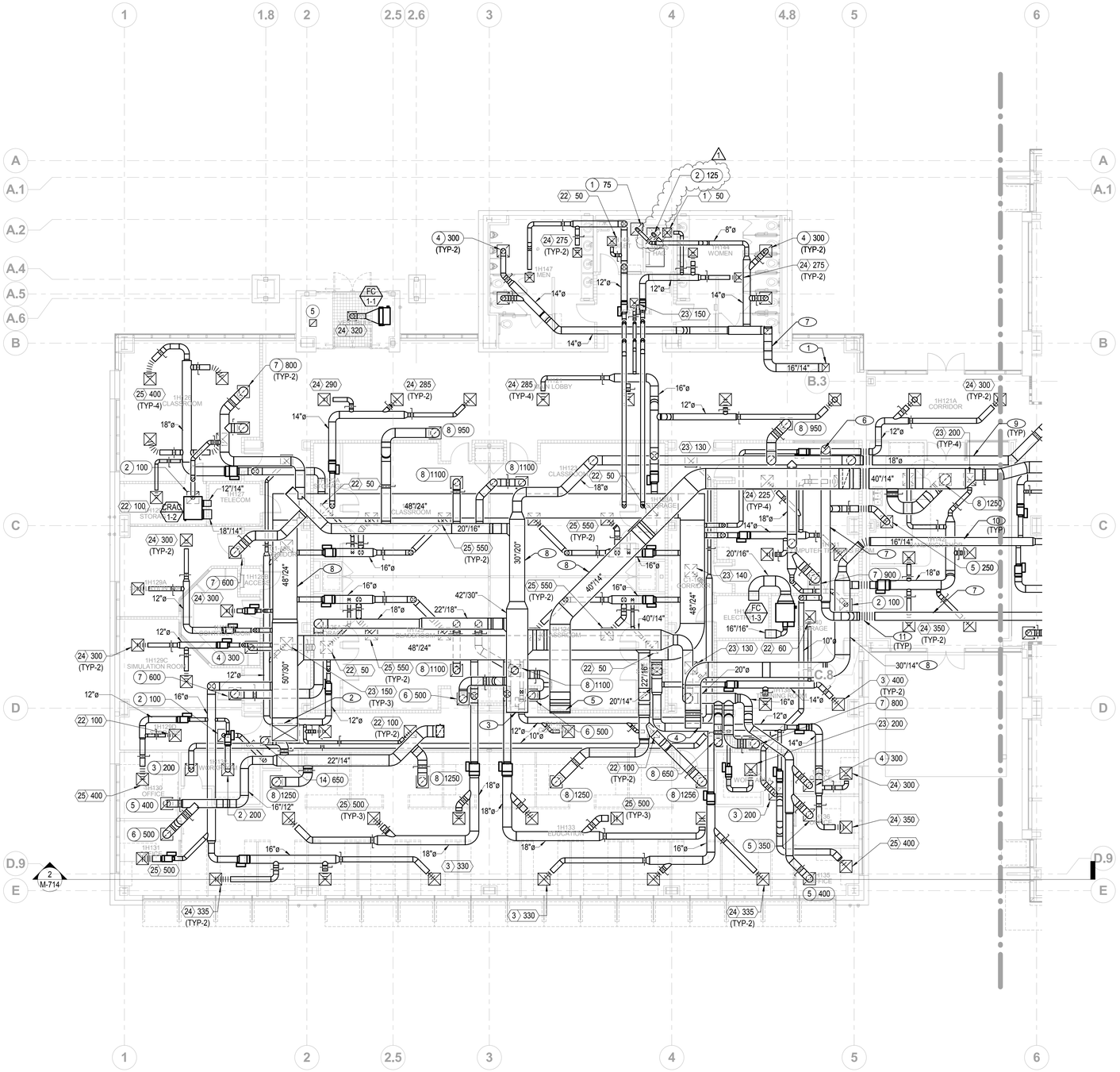

1 Mechanical Plan - Level 01 - Education Center

1/8" = 1'-0"

GENERAL NOTE

PLEASE SEE SHEET MH-301B FOR VAV BOX TAGGING AND INFORMATION.

NOTES

1. 16"ø EXHAUST DUCT UP TO EF-1.
2. 50"/30" SUPPLY FROM AHU-1.
3. 42"/30" RETURN TO AHU-1 WITHIN PENTHOUSE.
4. 30"/14" SUPPLY FROM AHU-2 WITHIN PENTHOUSE.
5. 40"/22" RETURN TO AHU-2 WITHIN PENTHOUSE.
6. 18"ø EXHAUST DUCT UP TO EF-2.
7. PROVIDE 1" DUCT LINER FOR EXHAUST DUCT AS INDICATED. REFER TO SPECIFICATIONS SECTION 233100 FOR ADDITIONAL INFOMATION.
8. PROVIDE 2" DUCT LINER FOR SUPPLY AND RETURN DUCTS AS INDICATED. REFER TO SPECIFICATIONS SECTION 233100 FOR ADDITIONAL INFORMATION.
9. PROVIDE PAINTABLE JACKET ON EXTERIOR INSULATION FOR RECTANGULAR DUCT WORK WITHIN THE EXPOSED CEILING AREA. PAINT INSULATION PER ARCHITECTURAL REQUIREMENTS.
10. PROVIDE DOUBLE WALLED INSULATED ROUND DUCTWORK WITHIN THE EXPOSED CEILING AREA. PAINT DUCTWORK PER ARCHITECTURAL REQUIREMENTS.
11. PROVIDE FLEXIBLE CONNECTION FOR DUCTWORK ROUTING THROUGH THE EXPANSION JOINT. COORDINATE WITH ARCHITECT FOR EXACT LOCATION AND LENGTH.

CONSTRUCTION DOCUMENTS

BUILDING IS FULLY SPRINKLERED

10.0264

Revisions:	Date:
1 ADDENDUM 1	08/15/12

CONSULTANTS:

CIVIL:	SLATER HANIFAN GROUP, 5740 S. ARVILLE ST. #216, LAS VEGAS, NV 89118
LANDSCAPE:	J W ZUNINO LANDSCAPE ARCHITECTURE, 3191 S. JONES BLVD., LAS VEGAS, NV 89146
MEP:	JBA CONSULTING ENGINEERING, 5155 WEST PATRICK LANE, LAS VEGAS, NV 89118
STRUCTURAL:	DEGENKOLB ENGINEERING, 235 MONTGOMERY STREET, SUITE 500, SAN FRANSISCO CA 94104
GEOTECHNICAL:	NINYO AND MOORE, 6700 PARADISE ROAD, SUITE E, LAS VEGAS, NV 89119
FIRE & LIFE SAFETY:	LASALLE ENGINEERING, 1000 YORK ROAD, WILLOW GROVE, PA 19090

KEY PLAN

ARCHITECT/ENGINEERS:

RTKL + JMA ARCHITECTURE STUDIOS — A Joint Venture

N TRUE

Drawing Title	Mechanical Plan - Level 1 - Education Center
Scale	As indicated
Approved: Project Director	Milan Hrskic
Project Title	VA Medical Center - PHASE V, Administration Bldg. & Education Ctr. Addition
Location	North Las Vegas, NV
Date	June 15, 2012
Checked	Checker
Drawn	Author
Project Number	593CA2202
Building Number	6
Drawing Number	MH-201B
	263 of 512

Office of Construction and Facilities Management

Department of Veterans Affairs

VA FORM 08-6231

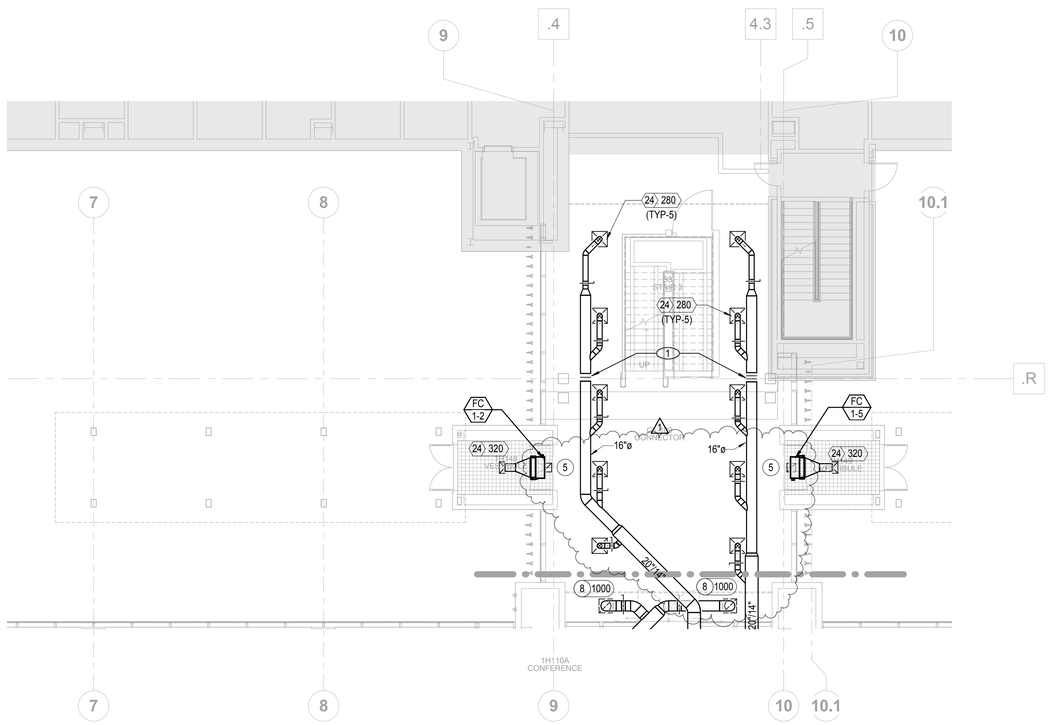

1 Mechanical Plan - Level 01 - Connector

1/8" = 1'-0"

NOTES

1. PROVIDE FLEXIBLE CONNECTION FOR DUCTWORK ROUTING THROUGH THE EXPANSION JOINT. COORDINATE WITH ARCHITECT FOR EXACT LOCATION AND LENGTH.

CONSTRUCTION DOCUMENTS

BUILDING IS FULLY SPRINKLERED

10.0264

1	ADDENDUM 1	08/15/12
Revisions:		Date:

CONSULTANTS:

CIVIL:	SLATER HANIFAN GROUP, 5740 S. ARVILLE ST. #216, LAS VEGAS, NV 89118
LANDSCAPE:	J W ZUNINO LANDSCAPE ARCHITECTURE, 3191 S. JONES BLVD., LAS VEGAS, NV 89146
MEP:	JBA CONSULTING ENGINEERING, 5155 WEST PATRICK LANE, LAS VEGAS, NV 89118
STRUCTURAL:	DEGENKOLB ENGINEERING, 235 MONTGOMERY STREET, SUITE 500, SAN FRANSISCO CA 94104
GEOTECHNICAL:	NINYO AND MOORE, 6700 PARADISE ROAD, SUITE E, LAS VEGAS, NV 89119
FIRE & LIFE SAFETY:	LASALLE ENGINEERING, 1000 YORK ROAD, WILLOW GROVE, PA 19090

KEY PLAN

C
B A

ARCHITECT/ENGINEERS:

RTKL
JMA ARCHITECTURE STUDIOS
A Joint Venture

N TRUE

Drawing Title: Mechanical Plan - Level 1 - Connector

Scale: As indicated

Approved: Project Director

Project Title: VA Medical Center - PHASE V, Administration Bldg. & Education Ctr. Addition

Location: North Las Vegas, NV

Date: June 15, 2012 | Checked: Checker | Drawn: Author

Project Number: 593CA2202

Building Number: 6

Drawing Number: MH-201C

Office of Construction and Facilities Management

Department of Veterans Affairs

VA FORM 08-6231

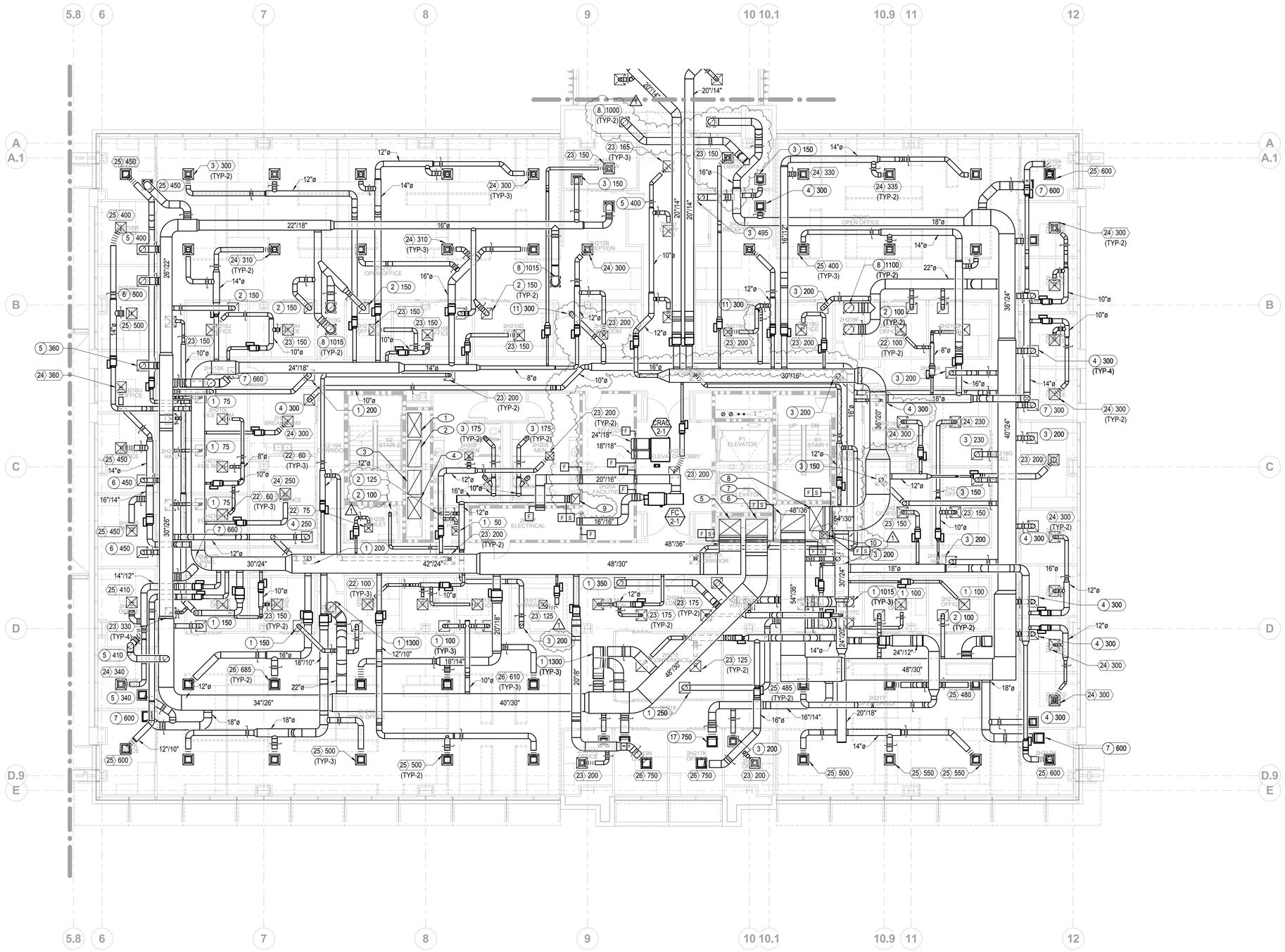

GENERAL NOTE

PLEASE SEE SHEET MH-301A FOR VAV BOX TAGGING AND INFORMATION.

NOTES

1. 48/30 SA DUCT UP AND DOWN FOR AHU-3.
2. 60/30 RA DUCT UP AND DOWN FOR AHU-3.
3. 54/30 RA DUCT UP AND DOWN FOR AHU-4.
4. 48/30 SA DUCT UP AND DOWN FOR AHU-4.
5. 48/36 SA DUCT UP FOR AHU-5.
6. 48/36 RA DUCT UP FOR AHU-5.
7. 54/36 RA DUCT UP FOR AHU-6.
8. 30/54 SA DUCT UP FOR AHU-6.
9. 22/18 EA DUCT UP AND DOWN IN RATED SHAFT FOR EF-3.
10. 12"Ø EA DOWN, 18/16 EA UP FOR EF-3.

1 Mechanical Plan - Level 02 - Admin

1/8" = 1'-0"

CONSTRUCTION DOCUMENTS

BUILDING IS FULLY SPRINKLERED

10.0264

1	ADDENDUM 1	08/15/12

Revisions: Date:

CONSULTANTS:

CIVIL: SLATER HANIFAN GROUP, 5740 S. ARVILLE ST. #216, LAS VEGAS, NV 89118
LANDSCAPE: J W ZUNINO LANDSCAPE ARCHITECTURE, 3191 S. JONES BLVD., LAS VEGAS, NV 89146
MEP: JBA CONSULTING ENGINEERING, 5155 WEST PATRICK LANE, LAS VEGAS, NV 89118
STRUCTURAL: DEGENKOLB ENGINEERING, 235 MONTGOMERY STREET, SUITE 500, SAN FRANSISCO CA 94104
GEOTECHNICAL: NINYO AND MOORE, 6700 PARADISE ROAD, SUITE E, LAS VEGAS, NV 89119
FIRE & LIFE SAFETY: LASALLE ENGINEERING, 1000 YORK ROAD, WILLOW GROVE, PA 19090

KEY PLAN

C B A

ARCHITECT/ENGINEERS:

RTKL
JMA ARCHITECTURE STUDIOS
A Joint Venture

N TRUE

Drawing Title: Mechanical Plan - Level 2 - Admin
Scale: As indicated
Approved: Project Director
Milan Griskic

Project Title: VA Medical Center - PHASE V, Administration Bldg. & Education Ctr. Addition
Location: North Las Vegas, NV
Date: June 15, 2012
Checked: Checker
Drawn: Author

Project Number: 593CA2202
Building Number: 6
Drawing Number: MH-202A
265 of 512

Office of Construction and Facilities Management
Department of Veterans Affairs

VA FORM 08-6231

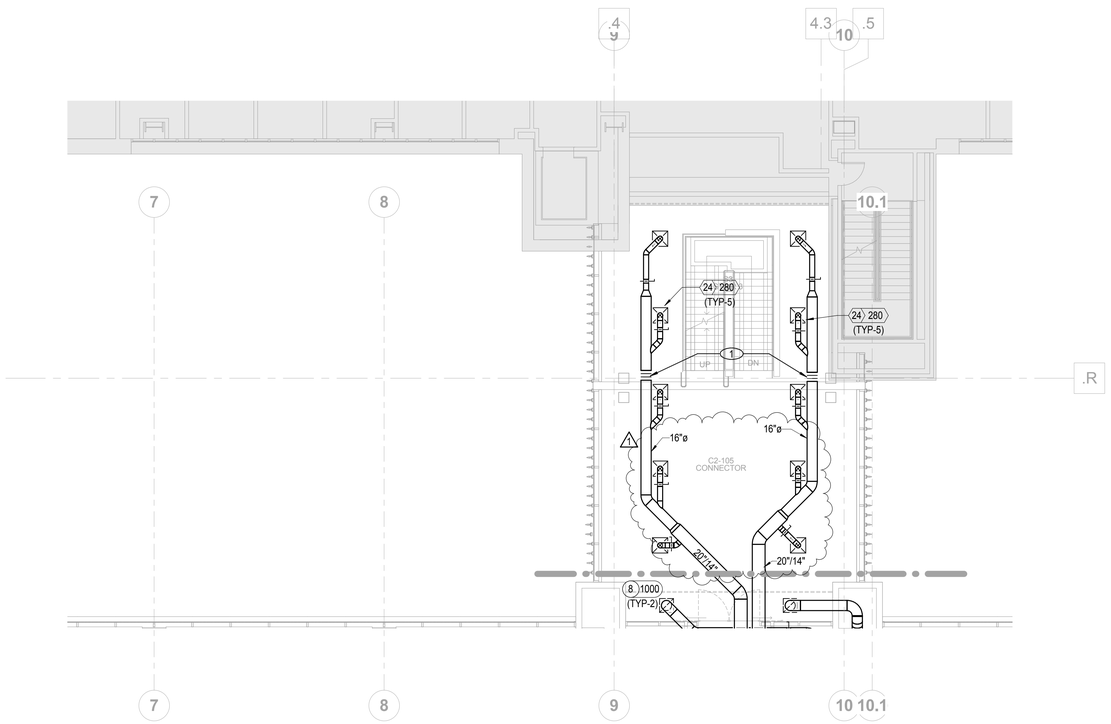

1 Mechanical Plan - Level 02 - Connector

1/8" = 1'-0"

NOTES

1. PROVIDE FLEXIBLE CONNECTION FOR DUCTWORK ROUTING THROUGH THE EXPANSION JOINT. COORDINATE WITH ARCHITECT FOR EXACT LOCATION AND LENGTH.

CONSTRUCTION DOCUMENTS

BUILDING IS FULLY SPRINKLERED

10.0264

1	ADDENDUM 1	08/15/12
Revisions:		Date:

CONSULTANTS:

CIVIL:	SLATER HANIFAN GROUP, 5740 S. ARVILLE ST. #216, LAS VEGAS, NV 89118
LANDSCAPE:	J W ZUNINO LANDSCAPE ARCHITECTURE, 3191 S. JONES BLVD., LAS VEGAS, NV 89146
MEP:	JBA CONSULTING ENGINEERING, 5155 WEST PATRICK LANE, LAS VEGAS, NV 89118
STRUCTURAL:	DEGENKOLB ENGINEERING, 235 MONTGOMERY STREET, SUITE 500, SAN FRANSISCO CA 94104
GEOTECHNICAL:	NINYO AND MOORE, 6700 PARADISE ROAD, SUITE E, LAS VEGAS, NV 89119
FIRE & LIFE SAFETY:	LASALLE ENGINEERING, 1000 YORK ROAD, WILLOW GROVE, PA 19090

KEY PLAN

C
B A

ARCHITECT/ENGINEERS:

RTKL
JMA ARCHITECTURE STUDIOS
A Joint Venture

N TRUE

Drawing Title: Mechanical Plan - Level 2 - Connector

Scale: As indicated

Approved: Project Director

Project Title: VA Medical Center - PHASE V, Administration Bldg. & Education Ctr. Addition

Location: North Las Vegas, NV

Date: June 15, 2012 | Checked: Checker | Drawn: Author

Project Number: 593CA2202

Building Number: 6

Drawing Number: MH-202C

267 of 512

Office of Construction and Facilities Management

Department of Veterans Affairs

VA FORM 08-6231

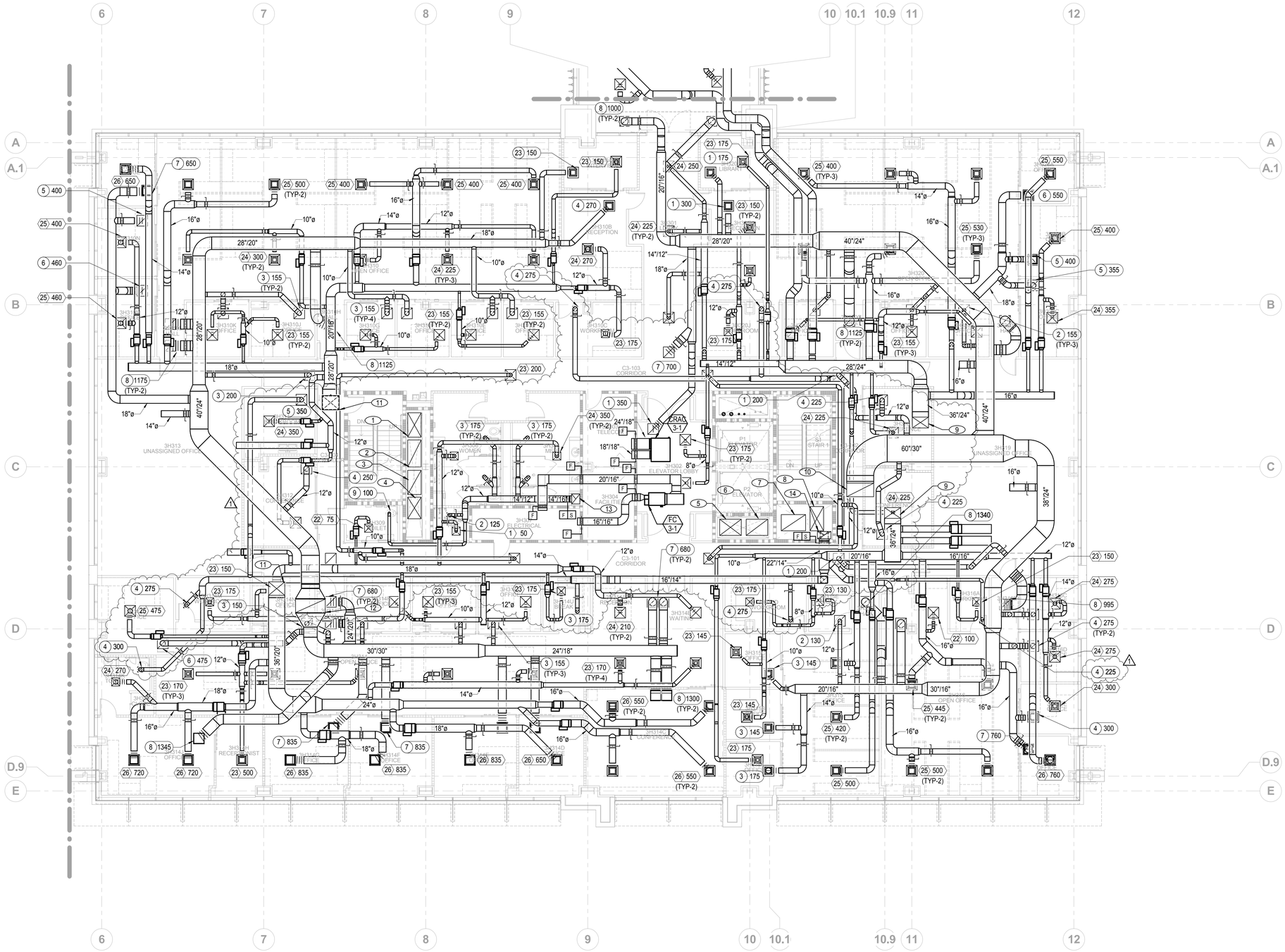

1 Mechanical Plan - Level 03 - Admin

1/8" = 1'-0"

GENERAL NOTE

PLEASE SEE SHEET MH-303A FOR VAV BOX TAGGING AND INFORMATION.

NOTES

1. 48/30 SA DUCT UP AND DOWN FOR AHU-3.
2. 60/30 RA DUCT UP AND DOWN FOR AHU-3.
3. 54/30 RA DUCT UP AND DOWN FOR AHU-4.
4. 48/30 SA DUCT UP AND DOWN FOR AHU-4.
5. 48/36 SA DUCT UP AND DOWN FOR AHU-5.
6. 48/36 RA DUCT UP AND DOWN FOR AHU-5.
7. 54/36 RA DUCT UP AND DOWN FOR AHU-6.
8. 30/54 SA DUCT UP AND DOWN FOR AHU-6.
9. 36/24 SA DUCT UP TO AHU-8.
10. 60/30 RA DUCT UP TO AHU-8.
11. 36/30 SA DUCT UP TO AHU-7.
12. 66/30 RA DUCT UP TO AHU-7.
13. 22/18 EA DUCT UP AND DOWN IN RATED SHAFT FOR EF-3.
14. 18/16 EA FROM BELOW 30/16 EA UP FOR EF-3.

CONSTRUCTION DOCUMENTS

BUILDING IS FULLY SPRINKLERED

10.0264

Revisions:	Date:
1 ADDENDUM 1	08/15/12

CONSULTANTS:

CIVIL:	SLATER HANIFAN GROUP, 5740 S. ARVILLE ST. #216, LAS VEGAS, NV 89118
LANDSCAPE:	J W ZUNINO LANDSCAPE ARCHITECTURE, 3191 S. JONES BLVD., LAS VEGAS, NV 89146
MEP:	JBA CONSULTING ENGINEERING, 5155 WEST PATRICK LANE, LAS VEGAS, NV 89118
STRUCTURAL:	DEGENKOLB ENGINEERING, 235 MONTGOMERY STREET, SUITE 500, SAN FRANSISCO CA 94104
GEOTECHNICAL:	NINYO AND MOORE, 6700 PARADISE ROAD, SUITE E, LAS VEGAS, NV 89119
FIRE & LIFE SAFETY:	LASALLE ENGINEERING, 1000 YORK ROAD, WILLOW GROVE, PA 19090

KEY PLAN

C
B A

ARCHITECT/ENGINEERS:

RTKL
JMA ARCHITECTURE STUDIOS
A Joint Venture

N TRUE

Drawing Title: Mechanical Plan - Level 3 - Admin

Scale: As indicated

Approved: Project Director

Project Title: VA Medical Center - PHASE V, Administration Bldg. & Education Ctr. Addition

Location: North Las Vegas, NV

Date: June 15, 2012 | Checked: Checker | Drawn: Author

Project Number: 593CA2202

Building Number: 6

Drawing Number: MH-203A

Office of Construction and Facilities Management

Department of Veterans Affairs

VA FORM 08-6231

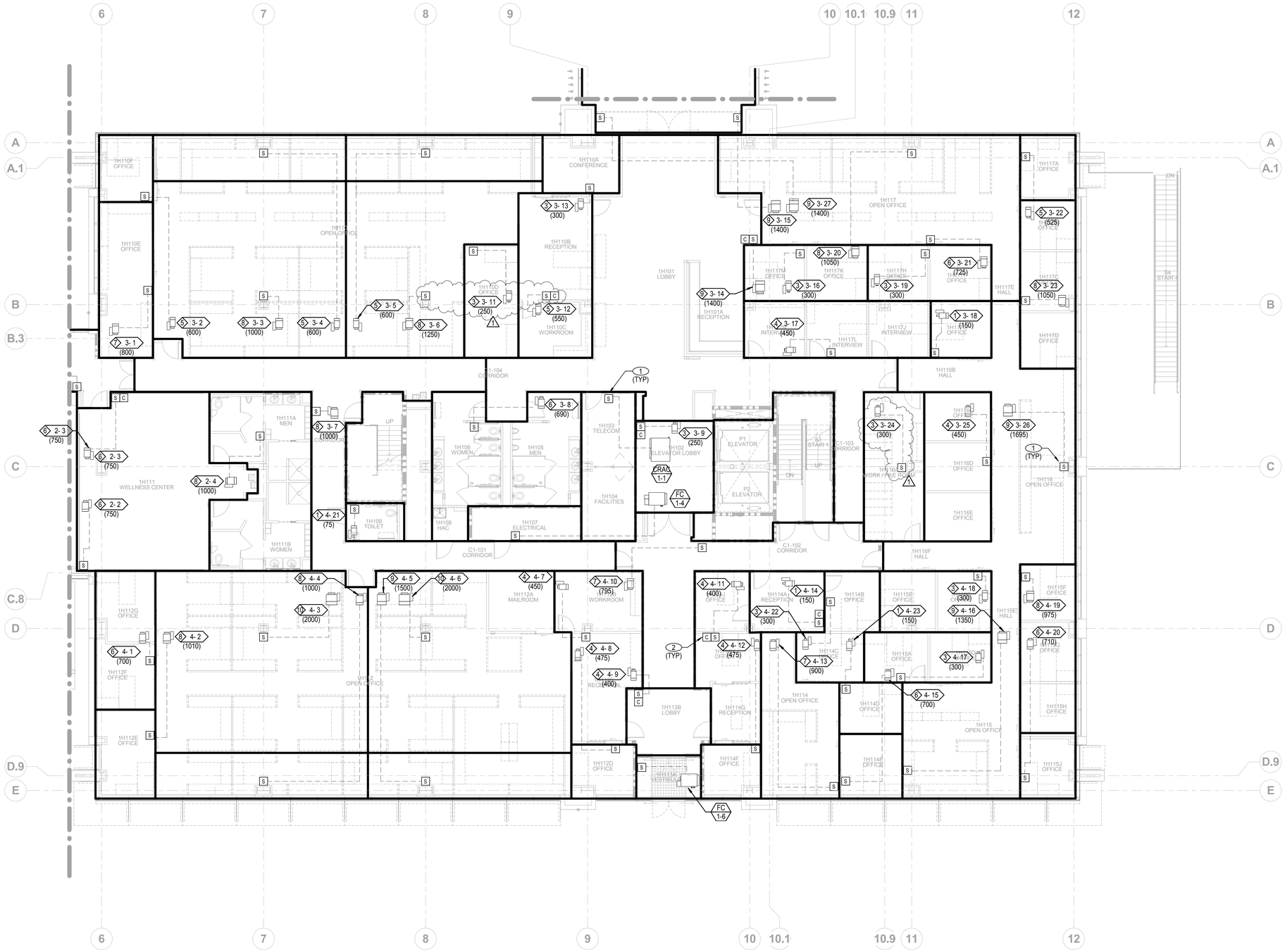

1 Mechanical Zoning Plan - Level 01 - Admin

1/8" = 1'-0"

NOTES

1. REFERENCE GENERAL NOTE #19 FOR SPACE SENSOR MOUNTING REQUIREMENTS.
2. PROVIDE SPACE MOUNTED CO2 SENSOR FOR ASSOCIATED VAV BOX. MOUNT CO2 SENSOR WITHIN BREATHING ZONE BETWEEN 3'-0" AND 6'-0" AFF.

CONSTRUCTION DOCUMENTS

BUILDING IS FULLY SPRINKLERED

10.0264

1	ADDENDUM 1	08/15/12
Revisions:		Date:

CONSULTANTS:

CIVIL: SLATER HANIFAN GROUP, 5740 S. ARVILLE ST. #216, LAS VEGAS, NV 89118
LANDSCAPE: J W ZUNINO LANDSCAPE ARCHITECTURE, 3191 S. JONES BLVD., LAS VEGAS, NV 89146
MEP: JBA CONSULTING ENGINEERING, 5155 WEST PATRICK LANE, LAS VEGAS, NV 89118
STRUCTURAL: DEGENKOLB ENGINEERING, 235 MONTGOMERY STREET, SUITE 500, SAN FRANSISCO CA 94104
GEOTECHNICAL: NINYO AND MOORE, 6700 PARADISE ROAD, SUITE E, LAS VEGAS, NV 89119
FIRE & LIFE SAFETY: LASALLE ENGINEERING, 1000 YORK ROAD, WILLOW GROVE, PA 19090

KEY PLAN

C
B A

ARCHITECT/ENGINEERS:

RTKL
JMA ARCHITECTURE STUDIOS
A Joint Venture

N TRUE

Drawing Title: Mechanical Zoning Plan - Level 1 - Admin
Scale: As indicated
Approved: Project Director: Milan Hrskic

Project Title: VA Medical Center - PHASE V, Administration Bldg. & Education Ctr. Addition
Location: North Las Vegas, NV
Date: June 15, 2012
Checked: Checker
Drawn: Author

Project Number: 593CA2202
Building Number: 6
Drawing Number: MH-301A
273 of 512

Office of Construction and Facilities Management
Department of Veterans Affairs

VA FORM 08-6231

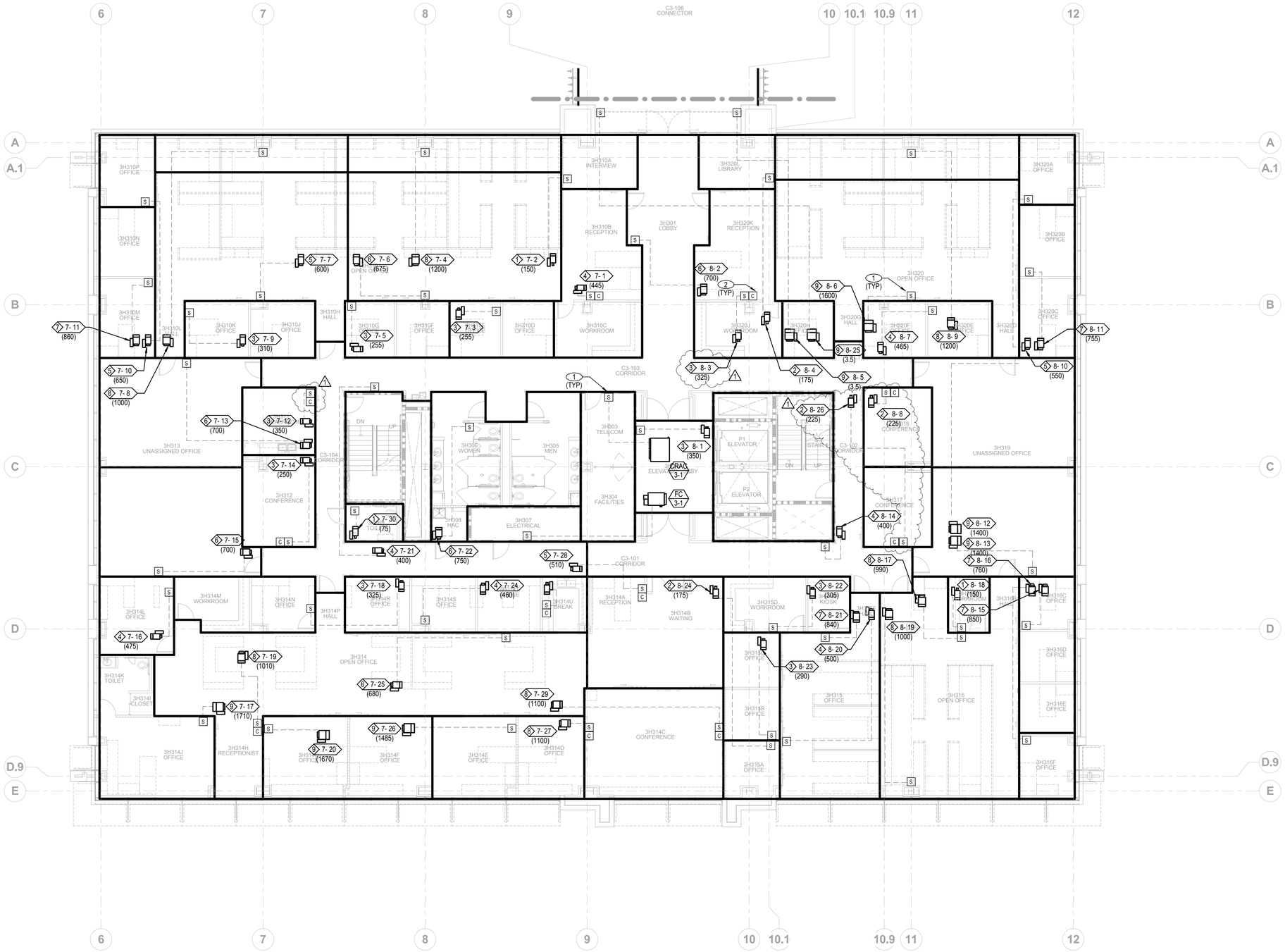

1 Mechanical Zoning Plan - Level 03

1/8" = 1'-0"

NOTES

1. REFERENCE GENERAL NOTE #19 FOR SPACE SENSOR MOUNTING REQUIREMENTS.
2. PROVIDE SPACE MOUNTED CO2 SENSOR FOR ASSOCIATED VAV BOX. MOUNT CO2 SENSOR WITHIN BREATHING ZONE BETWEEN 3'-0" AND 6'-0" AFF.

CONSTRUCTION DOCUMENTS

BUILDING IS FULLY SPRINKLERED

10.0264

Revisions:	Date:
1 ADDENDUM 1	08/15/12

CONSULTANTS:

CIVIL: SLATER HANIFAN GROUP, 5740 S. ARVILLE ST. #216, LAS VEGAS, NV 89118
LANDSCAPE: J W ZUNINO LANDSCAPE ARCHITECTURE, 3191 S. JONES BLVD., LAS VEGAS, NV 89146
MEP: JBA CONSULTING ENGINEERING, 5155 WEST PATRICK LANE, LAS VEGAS, NV 89118
STRUCTURAL: DEGENKOLB ENGINEERING, 235 MONTGOMERY STREET, SUITE 500, SAN FRANSISCO CA 94104
GEOTECHNICAL: NINYO AND MOORE, 6700 PARADISE ROAD, SUITE E, LAS VEGAS, NV 89119
FIRE & LIFE SAFETY: LASALLE ENGINEERING, 1000 YORK ROAD, WILLOW GROVE, PA 19090

KEY PLAN

C B A

ARCHITECT/ENGINEERS:

RTKL
JMA ARCHITECTURE STUDIOS
A Joint Venture

N TRUE

Drawing Title: Mechanical Zoning Plan - Level 3 - Admin
Scale: As indicated
Approved: Project Director: Milan Drašić

Project Title: VA Medical Center - PHASE V, Administration Bldg. & Education Ctr. Addition
Location: North Las Vegas, NV
Date: June 15, 2012
Checked: Checker
Drawn: Author

Project Number: 593CA2202
Building Number: 6
Drawing Number: MH-303A
279 of 512

Office of Construction and Facilities Management
Department of Veterans Affairs

VA FORM 08-6231

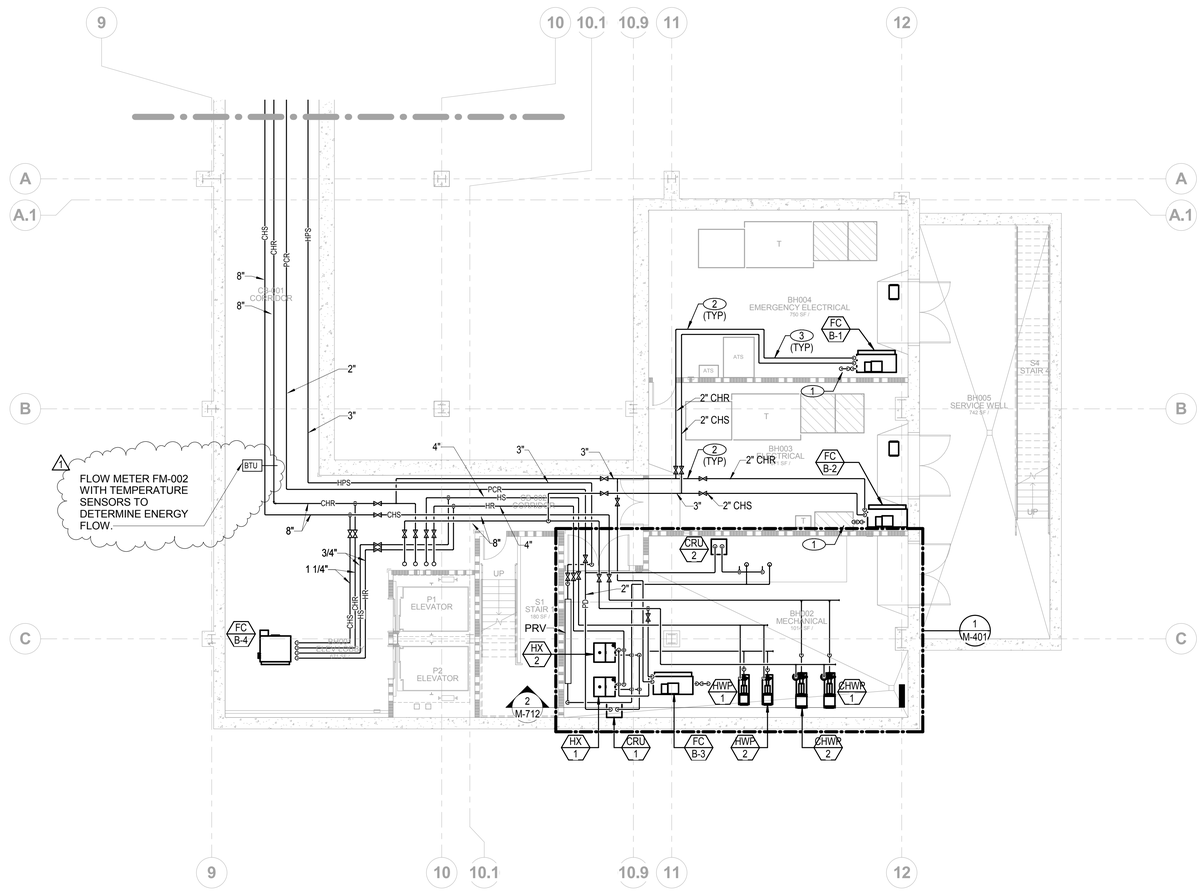

1 Mechanical Piping Plan - Basement Level - Admin

1/8" = 1'-0"

NOTES

1. 3/4" CONDENSATE DRAIN DOWN AND INDIRECT DRAIN TO SERVICE SINK.
2. ROUTE CHILLED WATER AND DRAIN PIPING AROUND ELECTRICAL EQUIPMENT. ENSURE THAT PIPING DOES NTO PASS OVER ELECTRICAL EQUIPMENT.
3. PROVIDE A SHEET METAL DRAIN PAN BELOW PIPING WITHIN THE ELECTRICAL ROOM. PIPE THE DRAIN TO THE NEAREST FLOOR SINK.

CONSTRUCTION DOCUMENTS

BUILDING IS FULLY SPRINKLERED

10.0264

Revisions:	Date:
1 ADDENDUM 1	08/15/12

CONSULTANTS:

CIVIL:	SLATER HANIFAN GROUP, 5740 S. ARVILLE ST. #216, LAS VEGAS, NV 89118
LANDSCAPE:	J W ZUNINO LANDSCAPE ARCHITECTURE, 3191 S. JONES BLVD., LAS VEGAS, NV 89146
MEP:	JBA CONSULTING ENGINEERING, 5155 WEST PATRICK LANE, LAS VEGAS, NV 89118
STRUCTURAL:	DEGENKOLB ENGINEERING, 235 MONTGOMERY STREET, SUITE 500, SAN FRANSISCO CA 94104
GEOTECHNICAL:	NINYO AND MOORE, 6700 PARADISE ROAD, SUITE E, LAS VEGAS, NV 89119
FIRE & LIFE SAFETY:	LASALLE ENGINEERING, 1000 YORK ROAD, WILLOW GROVE, PA 19090

KEY PLAN

C
B A

ARCHITECT/ENGINEERS:

RTKL
JMA ARCHITECTURE STUDIOS
A Joint Venture

N TRUE

Drawing Title: Mechanical Piping Plan - Basement Level - Admin

Scale: As indicated

Approved: Project Director

Project Title: VA Medical Center - PHASE V, Administration Bldg. & Education Ctr. Addition

Project Number: 593CA2202

Building Number: 6

Location: North Las Vegas, NV

Date: June 15, 2012 | Checked: Checker | Drawn: Author

Drawing Number: MP-200A

Office of Construction and Facilities Management

Department of Veterans Affairs

VA FORM 08-6231

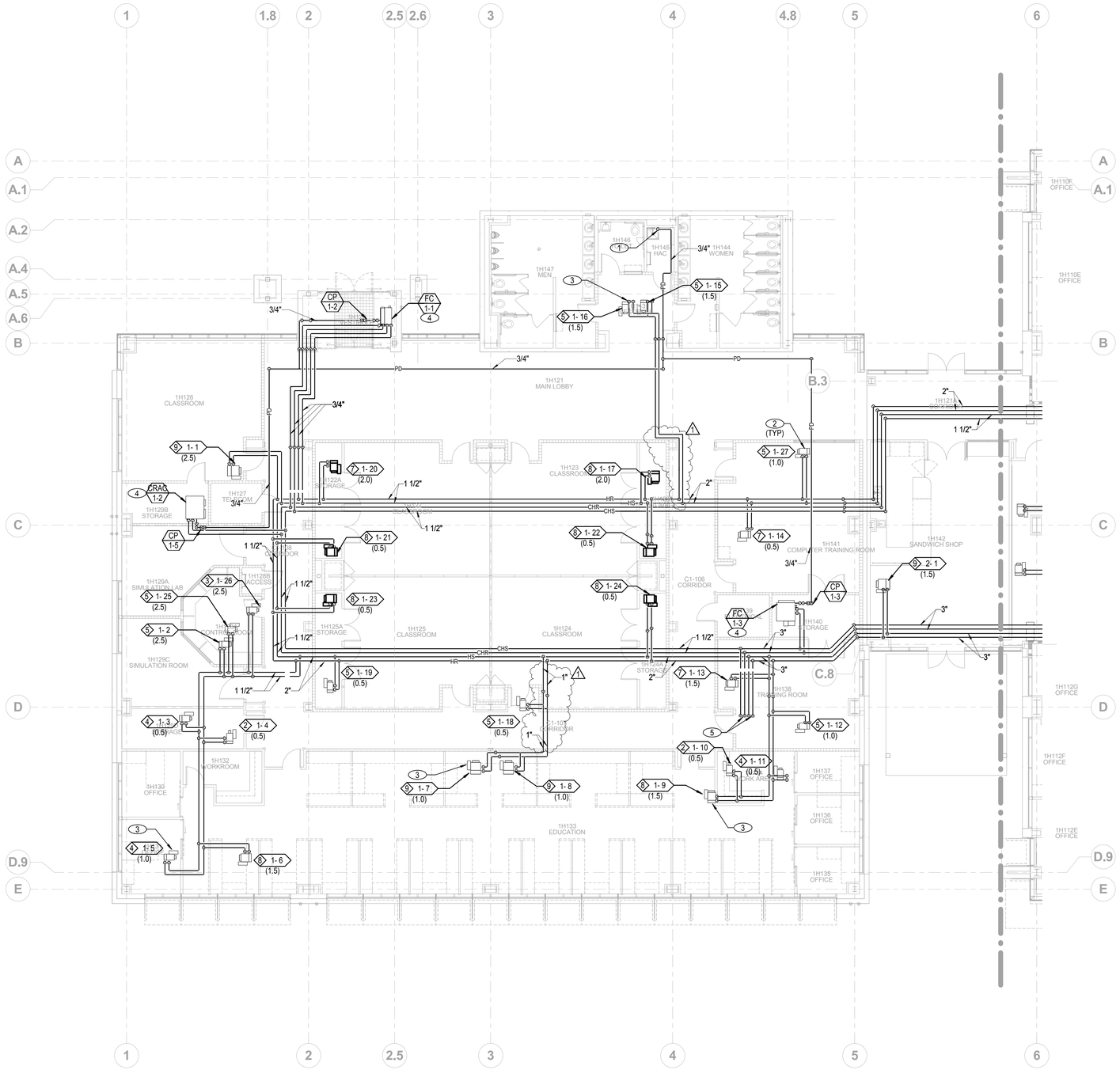

1 Mechanical Piping Plan - Level 01 - Education Center

1/8" = 1'-0"

NOTES

1. 3/4" CONDENSATE DRAIN DOWN AND INDIRECT DRAIN TO SERVICE SINK.
2. PROVIDE A 2-WAY CONTROL VALVE. SEE DETAIL 3/M-501.
3. PROVIDE A 3-WAY CONTROL VALVE. SEE DETAIL 2/M-504.
4. SEE DETAIL 2/M-501.
5. 3" CHS/R AND 2" HS/R UP TO PENTHOUSE. SEE SHEET M-401 FOR CONTINUATION.

CONSTRUCTION DOCUMENTS

BUILDING IS FULLY SPRINKLERED

10.0264

1	ADDENDUM 1	08/15/12
Revisions:		Date:

CONSULTANTS:

CIVIL:	SLATER HANIFAN GROUP, 5740 S. ARVILLE ST. #216, LAS VEGAS, NV 89118
LANDSCAPE:	J W ZUNINO LANDSCAPE ARCHITECTURE, 3191 S. JONES BLVD., LAS VEGAS, NV 89146
MEP:	JBA CONSULTING ENGINEERING, 5155 WEST PATRICK LANE, LAS VEGAS, NV 89118
STRUCTURAL:	DEGENKOLB ENGINEERING, 235 MONTGOMERY STREET, SUITE 500, SAN FRANSISCO CA 94104
GEOTECHNICAL:	NINYO AND MOORE, 6700 PARADISE ROAD, SUITE E, LAS VEGAS, NV 89119
FIRE & LIFE SAFETY:	LASALLE ENGINEERING, 1000 YORK ROAD, WILLOW GROVE, PA 19090

KEY PLAN

C B A

ARCHITECT/ENGINEERS:

RTKL | JMA ARCHITECTURE STUDIOS
A Joint Venture

N TRUE

Drawing Title: Mechanical Piping Plan - Level 1 - Education Center

Scale: As indicated

Approved: Project Director: Milan Drakic

Project Title: VA Medical Center - PHASE V, Administration Bldg. & Education Ctr. Addition

Location: North Las Vegas, NV

Date: June 15, 2012 | Checked: Checker | Drawn: Author

Project Number: 593CA2202

Building Number: 6

Drawing Number: MP-201B

285 of 512

Office of Construction and Facilities Management

Department of Veterans Affairs

VA FORM 08-6231

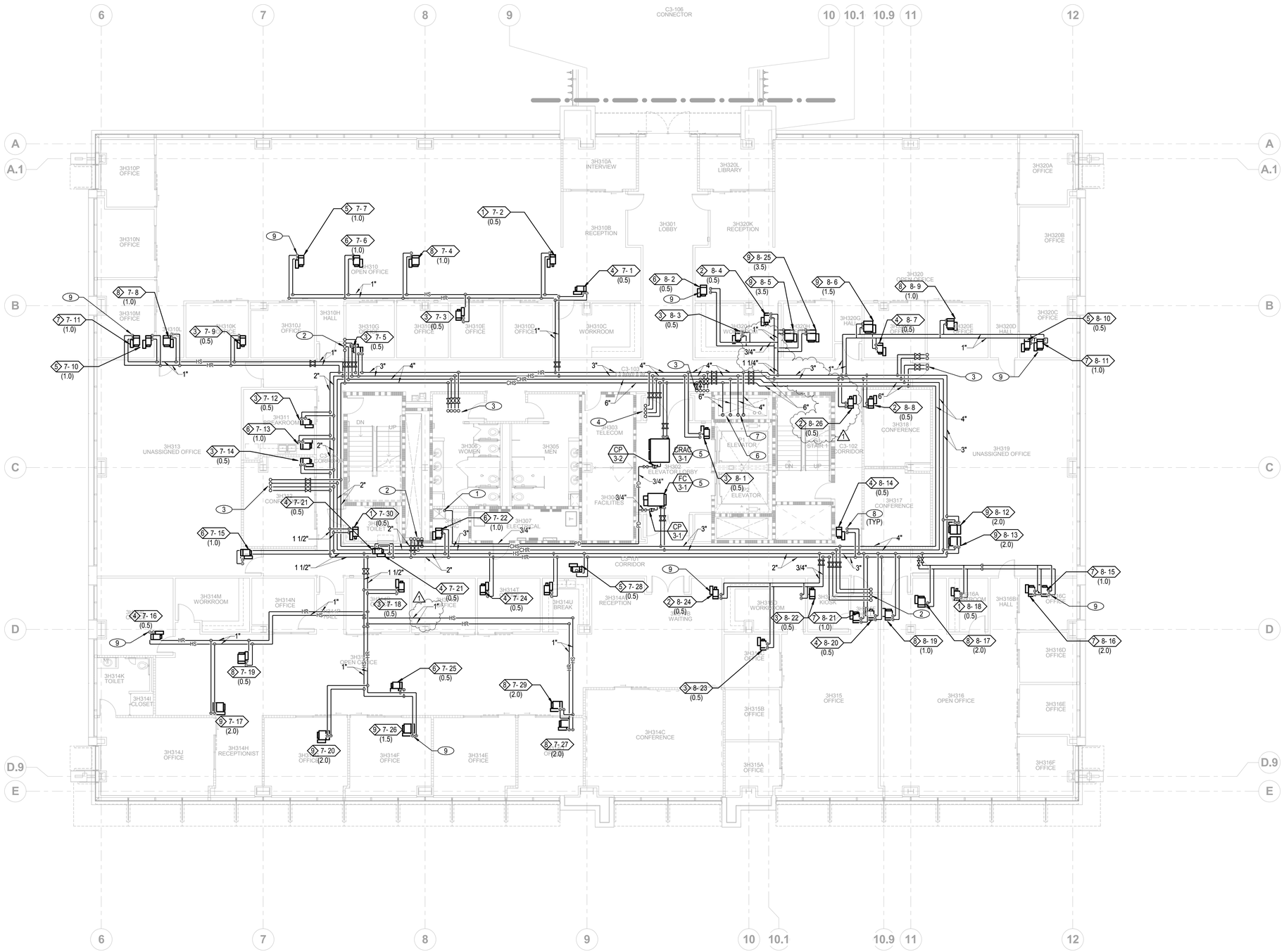

1 Mechanical Piping Plan - Level 03 - Admin

1/8" = 1'-0"

NOTES

1. 3/4" CONDENSATE DRAIN DOWN AND INDIRECT DRAIN TO SERVICE SINK.
2. 1" CHS/R AND 1" HS/R UP.
3. 3" CHS/R AND 2" HS/R UP.
4. 4" CHS/R AND 2-1/2" HS/R UP.
5. SEE DETAIL 2/M-501.
6. 8" CHS/R DOWN AND 6" CHS/R UP.
7. 4" HS/R UP AND DOWN.
8. PROVIDE A 2-WAY CONTROL VALVE. SEE DETAIL 3/M-501.
9. PROVIDE A 3-WAY CONTROL VALVE. SEE DETAIL 3/M-504.

CONSTRUCTION DOCUMENTS

BUILDING IS FULLY SPRINKLERED

10.0264

Revisions:	Date:
1 ADDENDUM 1	08/15/12

CONSULTANTS:

CIVIL:	SLATER HANIFAN GROUP, 5740 S. ARVILLE ST. #216, LAS VEGAS, NV 89118
LANDSCAPE:	J W ZUNINO LANDSCAPE ARCHITECTURE, 3191 S. JONES BLVD., LAS VEGAS, NV 89146
MEP:	JBA CONSULTING ENGINEERING, 5155 WEST PATRICK LANE, LAS VEGAS, NV 89118
STRUCTURAL:	DEGENKOLB ENGINEERING, 235 MONTGOMERY STREET, SUITE 500, SAN FRANSISCO CA 94104
GEOTECHNICAL:	NINYO AND MOORE, 6700 PARADISE ROAD, SUITE E, LAS VEGAS, NV 89119
FIRE & LIFE SAFETY:	LASALLE ENGINEERING, 1000 YORK ROAD, WILLOW GROVE, PA 19090

KEY PLAN

C
B A

ARCHITECT/ENGINEERS:

RTKL
JMA ARCHITECTURE STUDIOS
A Joint Venture

N TRUE

Drawing Title: Mechanical Piping Plan - Level 3 - Admin

Scale: As indicated

Approved: Project Director

Project Title: VA Medical Center - PHASE V, Administration Bldg. & Education Ctr. Addition

Location: North Las Vegas, NV

Date: June 15, 2012 | Checked: Checker | Drawn: Author

Project Number: 593CA2202

Building Number: 6

Drawing Number: MP-203A

Office of Construction and Facilities Management

Department of Veterans Affairs

VA FORM 08-6231

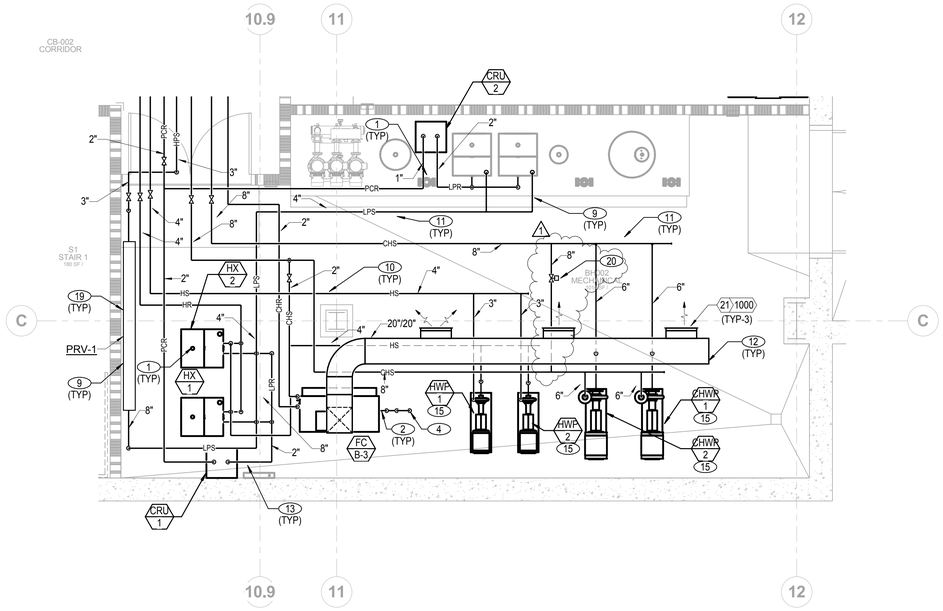

1 Enlarged Mechanical Room - Basement

1/4" = 1'-0"

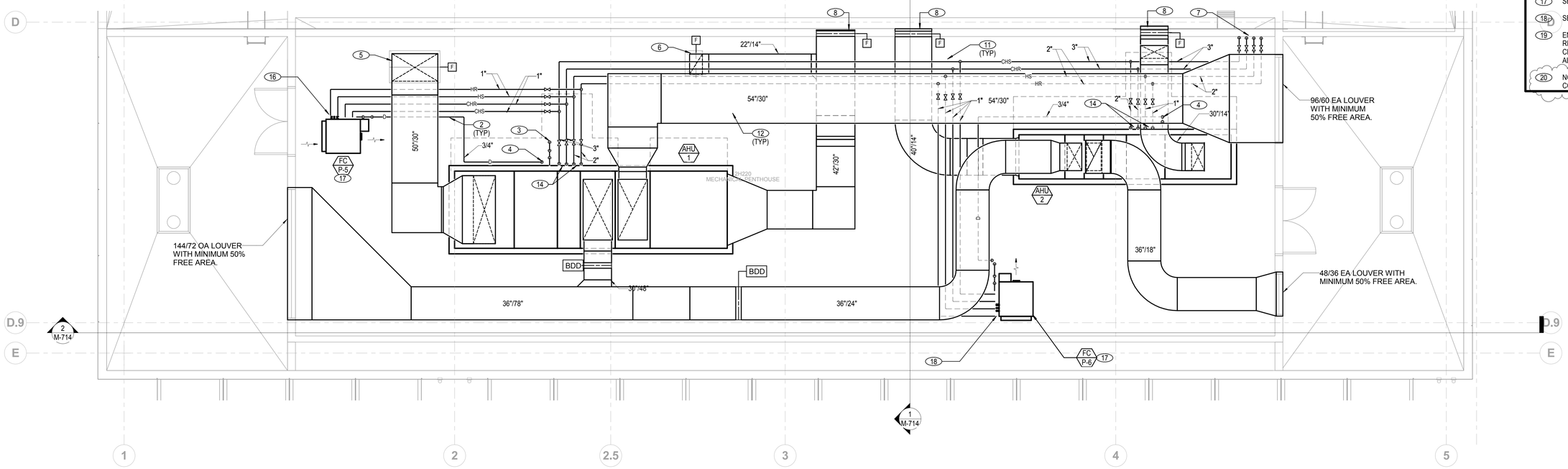

2 Enlarged Mehanical Roof Plan - Education Center

1/4" = 1'-0"

NOTES

1. COORDINATE EQUIPMENT LAYOUT AND ELEVATIONS FOR GRAVITY FLOW OF STEAM CONDENSATE. STEAM CONDENSATE SHALL NOT CROSS MECHANICL ROOM WALKWAYS AT AN ELEVATION LESS THAN 8'-0" AFF. WHERE GRAVITY FLOW CANOT BE ACHIEVED, PROVIDE PRESSURE POWERED PUMPS AS SPECIFIED IN SPECIFICATION SECTION 232223.
2. COORDINATE LOCATION OF ALL FLOOR SINKS AND CONDENSATE DRAIN PIPE ROUTING WITH ACTUAL AIR HANDLING UNIT LAYOUT. EQUIPMENT DRAIN PIPING SHALL NOT RUN ACROSS THE FLOOR MORE THAN 2'-0".
3. ROUTE CONDENSATE DRAIN FULL SIZE OF UNIT CONNECTION AND INDIRECT DRAIN TO NEAREST FLOOR SINK. SEE PLUMBING DRAWINGS FOR ADDITIONAL INFORMATION.
4. 3/4" CONDENSATE DRAIN DOWN AND INDIRECT DRAIN TO FLOOR SINK.
5. 50/30 SA DUCT DOWN.
6. 22/14 RA DUCT FROM BELOW.
7. 3" CHS/R, 2" HS/R FROM BELOW.
8. REFER TO SHEET MH-201B FOR CONTINUATION.
9. SEE SHEET M-704 FOR STEAM PIPING SCHEMATIC.
10. SEE SHEET M-704 FOR HEATING HOT WATER PIPING SCHEMATIC.
11. ROUTE PIPING OVERHEAD.
12. ROUTE DUCTWORK OVERHEAD.
13. ROUTE EQUIPMENT VENTS SEPARATE FROM RELIEF VENT PIPING WITH NO CROSS CONNECTIONS.
14. SEE DETAIL 1/M501.
15. SEE DETAIL 1/M-502.
16. PROVIDE A 3-WAY HEATING COIL CONTROL VALVE. SEE DETAIL 2/M-504.
17. SEE DETAIL 4/M-504.
18. SEE DETAIL 3/M-501.
19. ENSURE THAT MANUFACTURER'S RECOMMENDED MAINTENANCE CLEARANCES ARE MAINTAINED FOR ALL EQUIPMENT.
20. NORMALLY CLOSED TWO WAY CONTROL VALVE.

CONSTRUCTION DOCUMENTS

BUILDING IS FULLY SPRINKLERED

10.0264

1	ADDENDUM 1	08/15/12
Revisions:		Date:

CONSULTANTS:

CIVIL:	SLATER HANIFAN GROUP, 5740 S. ARVILLE ST. #216, LAS VEGAS, NV 89118
LANDSCAPE:	J W ZUNINO LANDSCAPE ARCHITECTURE, 3191 S. JONES BLVD., LAS VEGAS, NV 89146
MEP:	JBA CONSULTING ENGINEERING, 5155 WEST PATRICK LANE, LAS VEGAS, NV 89118
STRUCTURAL:	DEGENKOLB ENGINEERING, 235 MONTGOMERY STREET, SUITE 500, SAN FRANSISCO CA 94104
GEOTECHNICAL:	NINYO AND MOORE, 6700 PARADISE ROAD, SUITE E, LAS VEGAS, NV 89119
FIRE & LIFE SAFETY:	LASALLE ENGINEERING, 1000 YORK ROAD, WILLOW GROVE, PA 19090

KEY PLAN

ARCHITECT/ENGINEERS:

RTKL
JMA ARCHITECTURE STUDIOS
A Joint Venture

Drawing Title: Mechanical - Enlarged Part Plans

Scale: As indicated

Approved: Project Director

Project Title: VA Medical Center - PHASE V, Administration Bldg. & Education Ctr. Addition

Location: North Las Vegas, NV

Date: June 15, 2012 | Checked: Checker | Drawn: Author

Project Number: 593CA2202

Building Number: 6

Drawing Number: M-401

291 of 512

Office of Construction and Facilities Management

Department of Veterans Affairs

VA FORM 08-6231

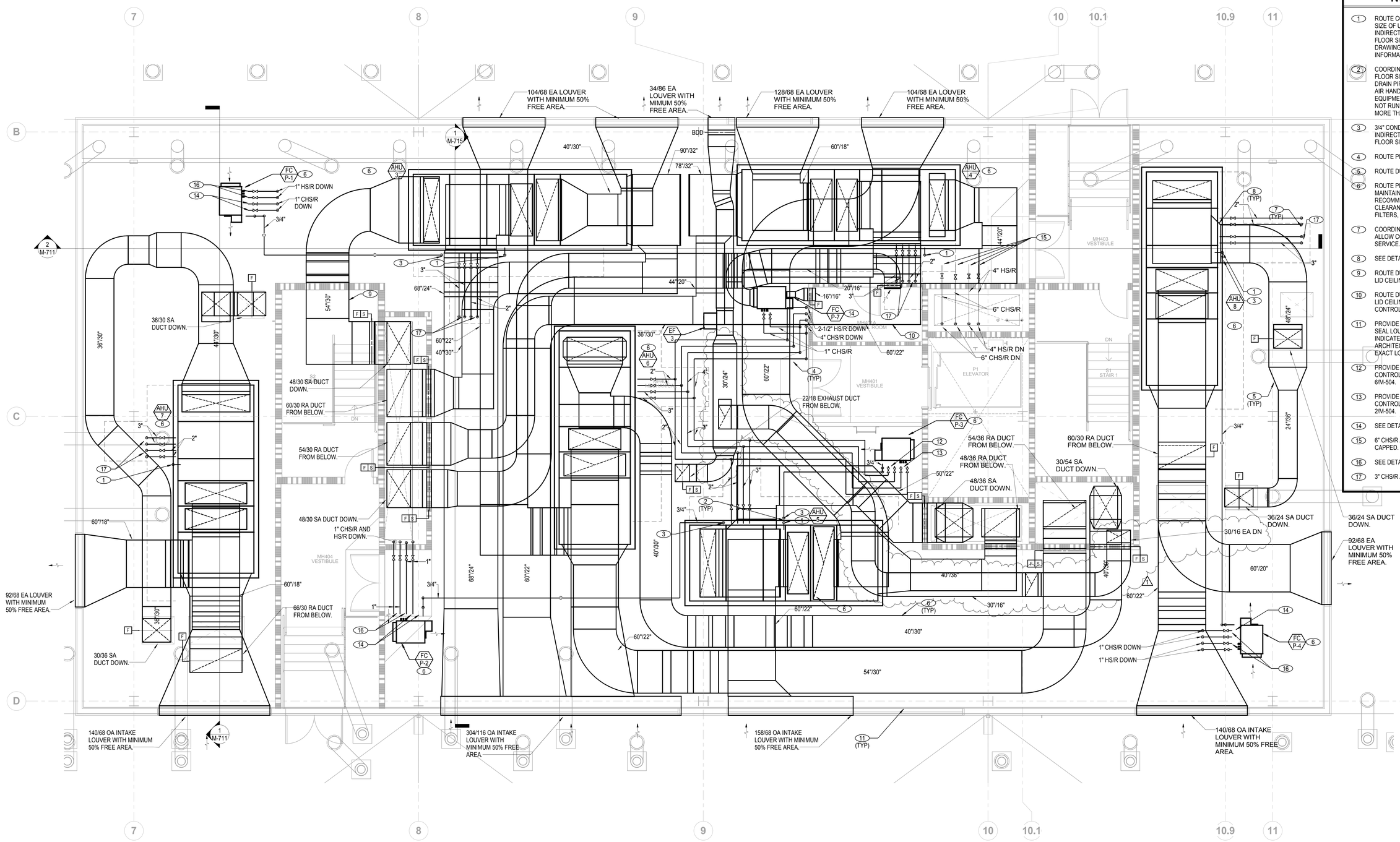

NOTES

1. ROUTE CONDENSATE DRAIN FULL SIZE OF UNIT CONNECTION AND INDIRECT DRAIN TO NEAREST FLOOR SINK. SEE PLUMBING DRAWINGS FOR ADDITIONAL INFORMATION.
2. COORDINATE LOCATIONS OF ALL FLOOR SINKS AND CONDENSATE DRAIN PIPE ROUTING WITH ACTUAL AIR HANDLING UNIT LAYOUT. EQUIPMENT DRAIN PIPING SHALL NOT RUN ACROSS THE FLOOR MORE THAN 2'-0".
3. 3/4" CONDENSATE DRAIN DOWN AND INDIRECT DRAIN TO NEAREST FLOOR SINK.
4. ROUTE PIPING OVERHEAD.
5. ROUTE DUCTWORK OVERHEAD.
6. ROUTE PIPING AND DUCTWORK TO MAINTAIN MANUFACTURER'S RECOMMENDED ACCESS CLEARANCES FOR COIL PULLS, FILTERS, FANS, ETC.
7. COORDINATE PENETRATIONS TO ALLOW COIL REMOVAL AND SERVICE.
8. SEE DETAIL 1/M-501.
9. ROUTE DUCTWORK ABOVE HARD LID CEILING WITHIN S2-STAIR2.
10. ROUTE DUCTWORK ABOVE HARD LID CEILING WITHIN MH401A CONTROL ROOM.
11. PROVIDE BLANK OFF PLATE AND SEAL LOUVER SECTIONS NOT INDICATED AS ACTIVE. SEE THE ARCHITECTURAL DRAWINGS FOR EXACT LOUVER PLACEMENT.
12. PROVIDE A 3-WAY COOLING COIL CONTROL VALVE. SEE DETAIL 6/M-504.
13. PROVIDE A 3-WAY HEATING COIL CONTROL VALVE. SEE DETAIL 2/M-504.
14. SEE DETAIL 4/M-504.
15. 6" CHS/R AND 4" HS/R VALVED AND CAPPED.
16. SEE DETAIL 3/M-501.
17. 3" CHS/R AND 2" HS/R DOWN.

1 Enlarged Mechanical Roof Plan - Admin

1/4" = 1'-0"

CONSTRUCTION DOCUMENTS

BUILDING IS FULLY SPRINKLERED

10.0264

Revisions:	Date:
1 ADDENDUM 1	08/15/12

CONSULTANTS:

CIVIL:	SLATER HANIFAN GROUP, 5740 S. ARVILLE ST. #216, LAS VEGAS, NV 89118
LANDSCAPE:	J W ZUNINO LANDSCAPE ARCHITECTURE, 3191 S. JONES BLVD., LAS VEGAS, NV 89146
MEP:	JBA CONSULTING ENGINEERING, 5155 WEST PATRICK LANE, LAS VEGAS, NV 89118
STRUCTURAL:	DEGENKOLB ENGINEERING, 235 MONTGOMERY STREET, SUITE 500, SAN FRANSISCO CA 94104
GEOTECHNICAL:	NINYO AND MOORE, 6700 PARADISE ROAD, SUITE E, LAS VEGAS, NV 89119
FIRE & LIFE SAFETY:	LASALLE ENGINEERING, 1000 YORK ROAD, WILLOW GROVE, PA 19090

KEY PLAN

ARCHITECT/ENGINEERS:

RTKL
JMA ARCHITECTURE STUDIOS
A Joint Venture

N TRUE

Drawing Title: Mechanical - Enlarged Part Plans

Scale: As indicated

Approved: Project Director

Project Title: VA Medical Center - PHASE V, Administration Bldg. & Education Ctr. Addition

Location: North Las Vegas, NV

Date: June 15, 2012 | Checked: Checker | Drawn: Author

Project Number: 593CA2202

Building Number: 6

Drawing Number: M-402

292 of 512

Office of Construction and Facilities Management

Department of Veterans Affairs

VA FORM 08-6231

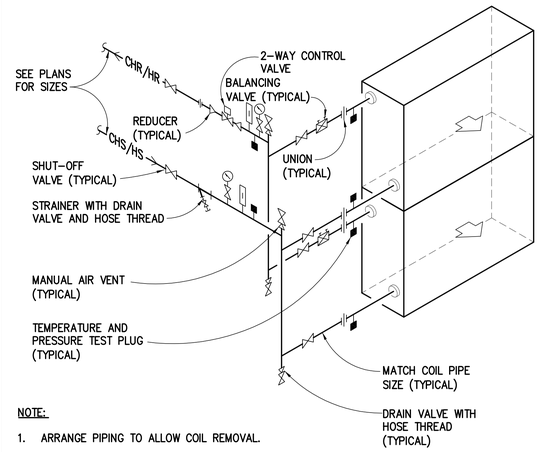

NOTE:

1. ARRANGE PIPING TO ALLOW COIL REMOVAL.

2-WAY AHU COIL PIPING DETAIL

NO SCALE

1 / M-501

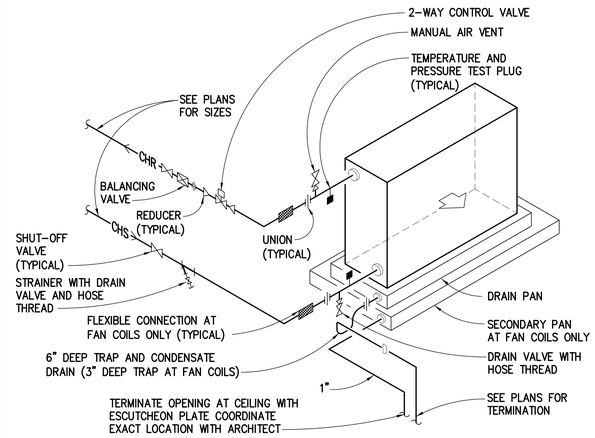

CONCEALED FAN COIL UNIT COIL PIPING DETAIL

NO SCALE

2 / M-501

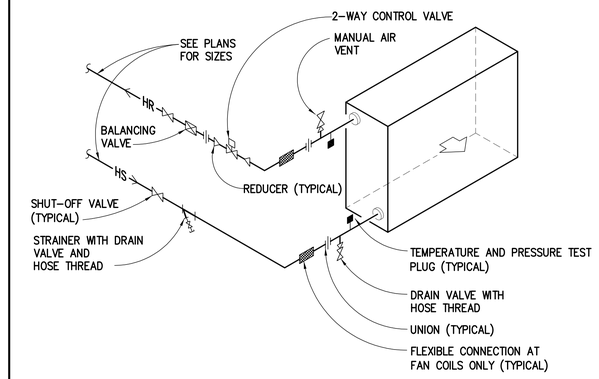

2-WAY FCU / VAV HEATING COIL PIPING DETAIL

NO SCALE

3 / M-501

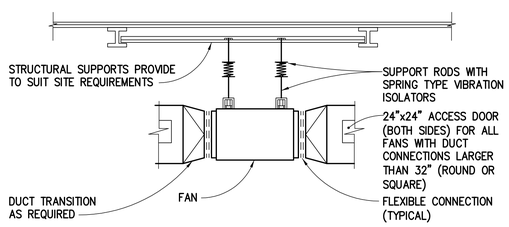

IN-LINE FAN DETAIL

NO SCALE

4 / M-501

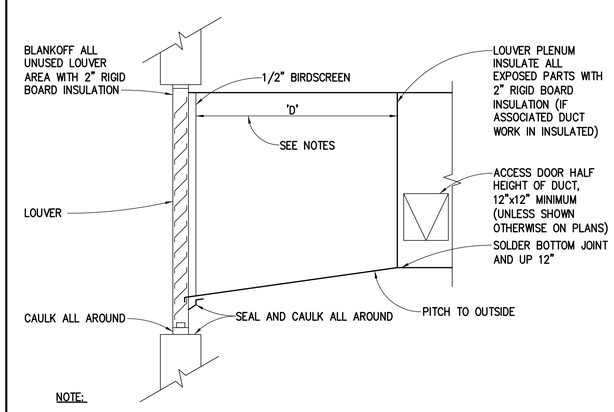

NOTE:

1. WHEN 'D' IS OVER 24", AND IF DEPTH INTO PAPER IS GREATER THAN 5'-0", PROVIDE 3/4" DRAIN AT 5'-0" CENTERS, 6" FROM LOUVER WITH TRAP.
2. PROVIDE 3/4" DRAIN FROM EACH LOUVER AND INDIRECT DRAIN TO NEAREST FLOOR SINK.

LOUVER CONNECTION DETAIL

NO SCALE

5 / M-501

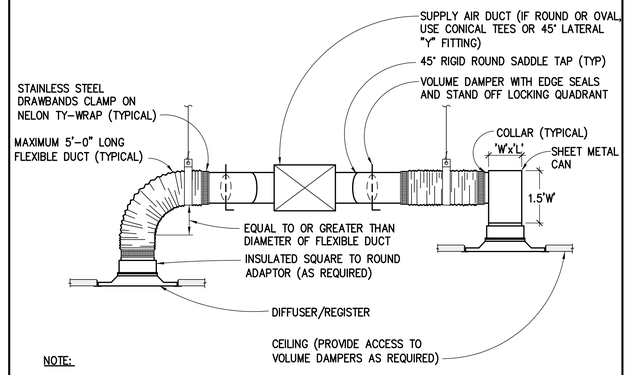

NOTE:

1. SPLICES IN FLEXIBLE AIR DUCT ARE NOT ALLOWED.
2. VOLUME DAMPERS ARE REQUIRED AT EVERY DUCT BRANCH TAKEOFF TO A DIFFUSER/GRILLE.
3. PROVIDE INSULATION FOR THE TOP OF SUPPLY DIFFUSERS.

DIFFUSER/REGISTER MOUNTING DETAIL

NO SCALE

6 / M-501

CONSTRUCTION DOCUMENTS
BUILDING IS FULLY SPRINKLERED

10.0264

1	ADDENDUM 1	08/15/12
Revisions:		Date:

CONSULTANTS:

CIVIL:	SLATER HANIFAN GROUP, 5740 S. ARVILLE ST. #216, LAS VEGAS, NV 89118
LANDSCAPE:	J W ZUNINO LANDSCAPE ARCHITECTURE, 3191 S. JONES BLVD., LAS VEGAS, NV 89146
MEP:	JBA CONSULTING ENGINEERING, 5155 WEST PATRICK LANE, LAS VEGAS, NV 89118
STRUCTURAL:	DEGENKOLB ENGINEERING, 235 MONTGOMERY STREET, SUITE 500, SAN FRANSISCO CA 94104
GEOTECHNICAL:	NINYO AND MOORE, 6700 PARADISE ROAD, SUITE E, LAS VEGAS, NV 89119
FIRE & LIFE SAFETY:	LASALLE ENGINEERING, 1000 YORK ROAD, WILLOW GROVE, PA 19090

KEY PLAN

ARCHITECT/ENGINEERS:

RTKL
JMA ARCHITECTURE STUDIOS
A Joint Venture

Drawing Title: MECHANICAL - DETAILS
Scale: N.T.S.
Approved: Project Director: Milan Arsikin

Project Title: VA Medical Center - PHASE V, Administration Bldg. & Education Ctr. Addition
Location: North Las Vegas, NV
Date: June 15, 2012 | Checked: RCE | Drawn: EJP

Project Number: 593CA2202
Building Number: 6
Drawing Number: M-501
293 of 512

Office of Construction and Facilities Management
Department of Veterans Affairs

VA FORM 08-6231

INDIVIDUAL TERMINAL UNIT SCHEDULE

EQUIPMENT NUMBER AHU	VAV	TYPE	MODEL	AIR FLOW (CFM) MIN	HEATING	DESIGN	COIL ROW/S	GPM	Btu/h	NOTES
1	1	9	14	510	850	1700	1	2.5	45600	
1	2	5	08	180	300	600	1	2.5	45600	
1	3	4	07	150	250	500	1	0.5	8600	
1	4	2	05	60	100	200	1	0.5	4100	
1	5	4	07	150	250	500	1	1.0	11900	
1	6	8	12	300	500	1000	1	1.5	21700	
1	7	9	14	450	750	1500	1	1.0	20300	
1	8	9	14	450	750	1500	1	1.0	20300	
1	9	8	12	300	500	1000	1	1.5	21700	
1	10	2	05	60	100	200	1	0.5	4100	
1	11	4	07	120	200	400	1	0.5	8600	
1	12	5	08	195	325	650	1	1.0	14100	
1	13	7	10	260	430	860	1	1.5	23900	
1	14	7	10	270	450	900	1	0.5	9500	
1	15	5	08	180	300	600	1	1.5	24900	
1	16	5	08	180	300	600	1	1.5	24900	
1	17	8	12	305	500	1005	1	2.0	36900	
1	18	5	08	180	300	600	1	0.5	5400	
1	19	5	08	195	325	650	1	0.5	5400	
1	20	7	10	260	430	860	1	2.0	36900	
1	21	8	12	345	575	1150	1	0.5	10900	
1	22	8	12	345	575	1150	1	0.5	10900	
1	23	8	12	345	575	1150	1	0.5	10900	
1	24	8	12	345	575	1150	1	0.5	10900	
1	25	5	08	180	300	600	1	2.5	45600	
1	26	3	06	90	150	300	1	2.5	45600	
1	27	5	08	180	300	600	1	1.0	13600	
2	1	9	14	750	750	1500	1	1.5	21700	
2	2	6	09	375	375	750	1	1.0	19500	
2	3	6	09	375	375	750	1	1.0	19500	
2	4	8	12	500	500	1000	1	0.5	10900	
3	1	7	10	240	400	800	1	1.5	21700	
3	2	5	08	180	300	600	1	0.5	10800	
3	3	8	12	300	500	1000	1	1.0	13600	
3	4	5	08	180	300	600	1	1.0	13000	
3	5	5	08	180	300	600	1	1.0	13000	
3	6	8	12	375	625	1250	1	1.0	13600	
3	7	8	12	300	500	1000	1	0.5	5400	
3	8	6	09	210	345	690	1	0.5	10800	
3	9	3	06	75	125	250	1	0.5	2700	
3	11	3	06	75	125	250	1	0.5	2700	
3	12	5	08	165	275	550	1	0.5	6800	
3	13	3	06	90	150	300	1	0.5	6500	
3	14	9	14	540	900	1400	1	1.5	24400	
3	15	9	14	420	700	1400	1	2.5	43400	
3	16	3	06	90	150	300	1	0.5	2700	
3	17	4	07	135	225	450	1	0.5	4100	
3	18	1	04	45	75	150	1	0.5	1400	
3	19	3	06	90	150	300	1	0.5	2700	
3	20	8	12	315	525	1050	1	1.0	17400	
3	21	6	09	220	360	725	1	0.5	81400	
3	22	5	08	160	260	525	1	0.5	1000	
3	23	8	12	315	525	1050	1	1.5	22800	
3	24	3	06	90	200	300	1	0.5	4100	
3	25	4	07	135	225	450	1	0.5	4100	
3	26	9	14	510	850	1695	1	3.0	54200	
3	27	9	14	420	700	1400	1	2.5	43400	
4	1	6	09	210	350	700	1	1.0	15200	
4	2	8	12	305	505	1010	1	0.5	10800	
4	3	10	16	600	1000	2000	1	1.5	27100	
4	4	8	12	300	500	1000	1	1.5	26000	
4	5	9	14	450	750	1500	1	1.5	26000	
4	6	10	16	600	1000	2000	1	1.5	27100	
4	7	4	07	135	225	450	1	0.5	6100	
4	8	4	07	145	240	475	1	0.5	9800	
4	9	4	07	120	200	400	1	0.5	8100	
4	10	7	10	240	400	795	1	0.5	10800	
4	11	4	07	120	200	400	1	0.5	6100	
4	12	4	07	145	240	475	1	0.5	6100	
4	13	7	10	270	450	900	1	1.0	16300	
4	14	1	04	45	75	150	1	0.5	2700	
4	15	6	09	210	350	700	1	1.0	13000	
4	16	9	14	405	675	1350	1	0.5	10800	
4	17	3	06	90	150	300	1	0.5	2700	
4	18	3	06	90	150	300	1	0.5	2700	
4	19	8	12	295	490	975	1	1.0	18500	
4	20	6	09	215	355	710	1	0.5	10800	
4	21	1	04	25	40	75	1	0.5	26000	
4	22	3	06	90	150	300	1	0.5	2700	
4	23	1	04	45	75	150	1	0.5	2700	

INDIVIDUAL TERMINAL UNIT SCHEDULE

EQUIPMENT NUMBER AHU	VAV	TYPE	MODEL	AIR FLOW (CFM) MIN	HEATING	DESIGN	COIL ROW/S	GPM	Btu/h	NOTES
5	1	3	06	105	175	350	1	0.5	4800	
5	2	8	12	285	475	950	1	1.0	14100	
5	3	1	04	40	65	125	1	0.5	1700	
5	4	1	04	25	40	75	1	0.5	1400	
5	5	10	16	550	915	1830	1	2.0	32500	
5	6	3	06	10	150	300	1	0.5	4100	
5	7	8	12	285	475	950	1	1.5	19500	
5	8	9	14	450	750	1500	1	1.5	19500	
5	9	9	14	415	685	1370	1	1.5	24400	
5	10	3	06	90	150	300	1	0.5	4100	
5	11	5	08	180	300	600	1	1.0	13000	
5	12	6	09	225	375	750	1	1.0	15200	
5	13	3	06	75	125	250	1	0.5	3400	
5	14	8	12	380	630	1260	1	1.0	14100	
5	15	2	05	55	90	180	1	0.5	2000	
5	16	3	06	90	150	300	1	0.5	4100	
5	17	4	07	135	225	450	1	0.5	9800	
5	18	7	10	220	450	900	1	1.0	19500	
5	19	5	08	190	310	620	1	1.0	13600	
5	20	3	06	190	150	300	1	0.5	4100	
5	21	5	08	180	300	600	1	1.0	16300	
5	22	7	10	270	450	900	1	1.0	16300	
5	23	3	06	90	150	300	1	0.5	2000	
5	24	8	12	305	510	1015	1	1.0	13600	
5	25	1	04	45	75	150	1	0.5	2000	
5	26	1	04	45	75	150	1	0.5	3300	
5	27	4	07	150	250	500	1	0.5	6800	
5	28	4	07	135	225	450	1	0.5	10800	
5	29	4	07	120	200	400	1	0.5	10800	
5	30	9	14	400	660	1320	1	1.5	24400	
6	1	3	06	105	175	350	1	0.5	4800	
6	2	3	06	75	125	250	1	0.5	3400	
6	3	6	09	285	475	750	1	1.0	14100	
6	4	9	14	480	800	1600	1	2.0	34700	
6	5	9	14	435	725	1450	1	1.5	27100	
6	6	3	06	90	150	300	1	0.5	2700	
6	7	1	04	30	50	100	1	0.5	2700	
6	8	5	08	180	300	600	1	1.0	13000	
6	9	5	08	180	300	600	1	1.0	13000	
6	10	5	08	180	300	600	1	1.0	13000	
6	11	4	07	115	190	380	1	0.5	2000	
6	12	1	04	45	75	150	1	0.5	4100	
6	13	2	05	60	100	200	1	1.0	13000	
6	14	4	07	120	200	400	1	0.5	5400	
6	15	3	06	45	75	300	1	0.5	3100	
6	16	2	05	60	100	200	1	0.5	2700	
6	17	8	12	360	600	1200	1	1.0	16300	
6	18	5	08	180	300	600	1	1.0	13000	
6	19	5	08	180	300	600	1	1.0	13000	
6	20	5	08	180	300	600	1	0.5	9800	
6	21	2	05	60	100	200	1	0.5	2700	
6	22	8	12	300	500	1000	1	1.5	21700	
6	23	4	07	150	250	500	1	0.5	6100	
6	24	1	04	45	75	150	1	0.5	3300	
6	25	9	14	420	700	1400	1	2.5	43400	
6	26	5	08	180	300	600	1	0.5	8100	
6	27	2	05	60	100	200	1	0.5	2700	
6	28	9	14	420	700	1400	1	2.5	43400	

INDIVIDUAL TERMINAL UNIT SCHEDULE

EQUIPMENT NUMBER AHU	VAV	TYPE	MODEL	AIR FLOW (CFM) MIN	HEATING	DESIGN	COIL ROW/S	GPM	Btu/h	NOTES
7	1	4	07	135	225	445	1	0.5	7500	
7	2	1	04	45	75	150	1	0.5	400	
7	3	3	06	80	115	255	1	0.5	2700	
7	4	8	12	360	600	1200	1	1.0	13500	
7	5	3	06	80	115	255	1	0.5	2700	
7	6	6	09	205	340	675	1	1.0	13000	
7	7	5	08	180	300	600	1	1.0	13000	
7	8	8	12	300	500	1000	1	1.0	13500	
7	9	3	06	95	155	310	1	0.5	2700	
7	10	5	08	185	325	650	1	1.0	11900	
7	11	7	10	260	430	860	1	1.0	13000	
7	12	3	06	105	175	350	1	0.5	4800	
7	13	6	09	210	350	700	1	1.0	15200	
7	14	3	06	75	125	250	1	0.5	6500	
7	15	6	09	210	350	700	1	1.0	15200	
7	16	4	07	145	240	475	1	0.5	6500	
7	17	9	14	515	855	1710	1	2.0	34700	
7	18	3	06	100	165	325	1	0.5	3300	
7	19	8	12	305	505	1010	1	0.5	10500	
7	20	9	14	505	835	1670	1	2.0	33600	
7	21	4	07	120	200	400	1	0.5	5400	
7	22	6	09	225	375	750	1	1.0	19500	
7	24	4	07	140	230	460	1	0.5	4800	
7	24	2	05	55	90	175	1	0.5	4800	
7	25	6	09	205	340	680	1	0.5	10500	
7	26	9	14	450	740	1485	1	1.5	27600	
7	27	8	12	330	550	1100	1	2.0	34700	
7	28	5	08	155	255	510	1	0.5	9500	
7	29	8	12	330	550	1100	1	2.0	34700	
7	30	1	04	25	40	75	1	0.5	1400	
8	1	3	06	105	175	350	1	0.5	4800	
8	2	6	09	210	350	700	1	0.5	9500	
8	3	3	06	150	240	325	1	0.5	1500	
8	4	2	05	55	90	175	1	0.5	4300	
8	5	9	14	510	850	1700	1	3.5	65100	
8	6	9	14	480	800	1600	1	1.5	21700	
8	7	4	07	150	235	465	1	0.5	4100	
8	8	2	05	135	225	225	1	0.5	4100	
8	9	8	12	360	600	1200	1	1.0	17400	
8	10	5	08	165	275	550	1	0.5	9800	
8	11	7	10	260	340	755	1	1.0	11300	
8	12	9	14	420	700	1400	1	2.0	30400	
8	13	9	14	420	700	1400	1	2.0	30400	
8	14	4	07	120	200	400	1	0.5	5400	
8	15	7	10	255	425	850	1	1.0	11900	
8	16	7	10	230	380	760	1	2.0	9800	
8	17	8	12	300	495	990	1	2.0	20300	
8	18	1	04	45	75	150	1	0.5	1400	
8	19	8	12	300	500	1000	1	1.0	13000	
8	20	4	07	150	250	500	1	0.5	8700	
8	21	7	10	255	420	840	1	1.0	13600	
8	22	3	06	95	150	305	1	0.5	3900	
8	23	3	06	90	145	290	1	0.5	2700	
8	24	2	05	55	90	175	1	0.5	3300	
8	25	9	14	510	850	1700	1	3.5	65100	
8	26	2	05	135	225	225	1	0.5	4100	

TYPICAL TERMINAL UNIT SCHEDULE

TYPE	INLET DIMENSIONS (IN)	MAX AIR FLOW (CFM)	MAX AIR PD (IN-WG)	HEATING COIL: EWT (°F)	HEATING COIL: PIPE RUN OUT SIZE	NC RATING: MAX DISCHARGE @ 1.5" INLET SP	NC RATING: MAX RAD NC @ 1.5" INLET SP
1	4"	150	0.06	180	3/4"	23.50	25.25
2	5"	225	0.06	180	3/4"	22.33	25.50
3	6"	350	0.20	180	3/4"	25.50	28.00
4	7"	500	0.19	180	3/4"	26.50	27.00
5	8"	650	0.19	180	3/4"	29.50	28.50
6	9"	750	0.14	180	3/4"	23.25	26.00
7	10"	900	0.16	180	3/4"	25.00	30.50
8	12"	1300	0.17	180	1"	27.83	30.83
9	14"	1750	0.17	180	1"	23.33	29.25
10	16"	2000	0.14	180	1"	20.50	24.50

DIFFUSER & REGISTER SCHEDULE

SUPPLY AIR

ITEM	NECK SIZE	AIRFLOW (CFM) MIN	MAX	TYPE
1	6x6	0	190	S1
2	8x8	191	310	S1
3	10x10	311	430	S1
4	12x12	431	560	S1
5	14X14	561	695	S1
6	16X16	696	820	S1
7	18X18	821	950	S1
8	20x20	951	1085	S1
9	22x22	1086	1200	S1
10	24x24	1201	1330	S1
11	-	-	-	S2
12	-	-	-	S2
13	-	-	-	S2
14	-	-	-	S2
15	-	-	-	S2
16	-	-	-	S2
17	6x6	0	125	S3
18	8x8	126	250	S3
19	12x8	251	350	S3
20	18x8	351	550	S3
21	24x12	551	1000	S3
22	6"ø	0	100	S4
23	8"ø	101	200	S4
24	10"ø	201	375	S4
25	12"ø	376	600	S4
26	14"ø	601	900	S4

RETURN OR EXHAUST AIR

ITEM	NECK SIZE	AIRFLOW (CFM) MIN	MAX	TYPE
1	6x6	0	80	R1
2	8x8	81	140	R1
3	10x10	141	215	R1
4	12x12	216	315	R1
5	14x14	316	430	R1
6	16x16	431	560	R1
7	18x18	561	900	R1
8	22x22	901	1345	R1
9	6x6	0	100	R2
10	8x8	101	190	R2
11	10x10	191	300	R2
12	12x12	301	450	R2
13	14x14	451	625	R2
14	16x16	626	810	R2
15	18x18	811	965	R2
16	20x20	966	1110	R2
17	22x22	1111	1255	R2
18	24x24	1256	1375	R2

DIFFUSER & REGISTER SPECIFICATIONS

SUPPLY AIR TYPES:

TYPE S1: MODULAR CORE DIFFUSER WITH BORDER TYPE FOR LAY-IN CEILINGS OR FOR SURFACE MOUNT. THROW PATTERN SHALL BE 4 WAY UNLESS NOTED OTHERWISE. PROVIDE SQUARE TO ROUND TRANSITION AS REQUIRED.

TYPE S2: -NOT USED.-

TYPE S3: DOUBLE DEFLECTION SIDE WALL SUPPLY AIR GRILLE.

TYPE S4: SQUARE PLAQUE DIFFUSER WITH BORDER TYPE FOR LAY-IN CEILINGS OR FOR SURFACE MOUNT 12"x12" OR 24"x24" CEILING MODULE. PROVIDE WITH DIRECTIONAL BLOW CLIPS FOR THROW PATTERN CONTROL WHERE REQUIRED. THROW PATTERN SHALL BE 4 WAY UNLESS NOTED OTHERWISE.

RETURN AIR TYPES:

TYPE R1: PERFORATED FLUSH FACE GRILLE WITH BORDER TYPE WITH 24" X 24" MODULE SIZE FOR LAY-IN CEILINGS AND SURFACE MOUNT. PROVIDE SQUARE TO ROUND TRANSITION AS REQUIRED.

TYPE R2: GRILLE WITH 3/4" SPACED BLADES AND 35° DEFLECTION, BORDER TYPE FOR SURFACE MOUNT OR BORDER TYPE FOR LAY-IN CEILINGS. INSTALL WITH BLADES OPPOSED TO LINE OF SIGHT.

CONSTRUCTION DOCUMENTS

BUILDING IS FULLY SPRINKLERED

10.0264

Revisions:	Date:
1 ADDENDUM 1	08/15/12

CONSULTANTS:

CIVIL: SLATER HANIFAN GROUP, 5740 S. ARVILLE ST. #216, LAS VEGAS, NV 89118
LANDSCAPE: J W ZUNINO LANDSCAPE ARCHITECTURE, 3191 S. JONES BLVD., LAS VEGAS, NV 89146
MEP: JBA CONSULTING ENGINEERING, 5155 WEST PATRICK LANE, LAS VEGAS, NV 89118
STRUCTURAL: DEGENKOLB ENGINEERING, 235 MONTGOMERY STREET, SUITE 500, SAN FRANSISCO CA 94104
GEOTECHNICAL: NINYO AND MOORE, 6700 PARADISE ROAD, SUITE E, LAS VEGAS, NV 89119
FIRE & LIFE SAFETY: LASALLE ENGINEERING, 1000 YORK ROAD, WILLOW GROVE, PA 19090

KEY PLAN

ARCHITECT/ENGINEERS:

RTKL
JMA ARCHITECTURE STUDIOS
A Joint Venture

Drawing Title: Mechanical - Schedules
Scale
Approved: Project Director

Project Title: VA Medical Center - PHASE V, Administration Bldg. & Education Ctr. Addition
Location: North Las Vegas, NV
Date: June 15, 2012 | Checked: Checker | Drawn: Author

Project Number: 593CA2202
Building Number: 6
Drawing Number: M-601

Office of Construction and Facilities Management
Department of Veterans Affairs

VA FORM 08-6231

AIR HANDLING UNIT SCHEDULE

ITEM	LOCATION	SERVICE	HEIGHT x WIDTH	TYPE	SUPPLY FAN						RETURN FAN					FILTERS				HEATING COIL									COOLING COIL												UNIT				NOTES
																PRE		FINAL		AIR SIDE				WATER SIDE					AIR SIDE					WATER SIDE											
																													EAT		LAT														
					AIRFLOW (CFM)	ESP (IN WC)	TSP (IN WC) (DIRTY FILTERS)	FAN RPM	WHEEL SIZE AND TYPE	MOTOR HP (BHP)	AIRFLOW (CFM)	ESP (IN WC)	FAN RPM	WHEEL SIZE AND TYPE	MOTOR HP (BHP)	DEPTH (IN)	EFF (MERV)	DEPTH (IN)	EFF (MERV)	TOTAL (MBH)	EAT DB (°F)	LAT DB (°F)	MAX APD (IN WC)	GPM	EWT (°F)	LWT (°F)	MAX WPD (FT WC)	MAX FACE VEL (FPM)	MIN ROWS	TOTAL (MBH)	SENSIBLE (MBH)	DB (°F)	WB (°F)	DB (°F)	WB (°F)	MAX APD (IN WC)	GPM	EWT (°F)	LWT (°F)	MAX WPD (FT WC)	MAX FACE VEL (FPM)	MIN ROWS	MIN OUTSIDE AIR (CFM)	V/PH	MAX SIZE (LxWxH) (IN)	MAX OPERATING WEIGHT (LBS)	
AHU-1	EDUCATION CENTER ROOF	EDUCATION CENTER	84x84	VAV	18,000	3.5	6.3	–	PL	30	18,000	2.5	–	AF	20	2	8	21	13	393	58.2	80	0.2	20	180	140	10	500	2	633	315	84.1	63.6	54.5	51.0	0.7	80	44	60	10	500	6	4,100	460/3	300x84x84	9,000	1,2,3,4,5
AHU-2	EDUCATION CENTER ROOF	WELLNESS CENTER	48x51	VAV	4,000	3.5	6.3	–	PL	15	4,000	2.5	–	AF	7.5	2	8	21	13	130	47.6	80	0.2	7	180	140	10	500	2	172	70	91.7	66.0	54.5	51.0	0.7	22	44	60	10	500	6	1,900	460/3	252x51x48	4,000	1,2,3,4,5
AHU-3	LEVEL 4	LEVEL 1 ADMIN NORTH	72x96	VAV	16,500	3.5	5.9	–	PL	30	16,500	2.5	–	AF	15	2	8	21	13	310	61.2	80	0.2	16	180	140	10	500	2	544	289	81.9	62.9	54.5	51.0	0.7	68	44	60	10	500	6	2,600	460/3	241x96x72	8,500	1,2,3,4,5
AHU-4	LEVEL 4	LEVEL 1 ADMIN SOUTH	72x90	VAV	16,000	3.5	6.1	–	PL	30	16,000	2.5	–	AF	15	2	8	21	13	270	63.2	80	0.2	14	180	140	10	500	2	504	280	80.5	62.5	54.5	51.0	0.7	63	44	60	10	500	6	1,800	460/3	264x84x72	8,500	1,2,3,4,5
AHU-5	LEVEL 4	LEVEL 2 ADMIN WEST	72x96	VAV	17,000	3.5	6.1	–	PL	30	17,000	2.5	–	AF	15	2	8	21	13	321	61.2	80	0.2	17	180	140	10	500	2	561	298	81.9	62.9	54.5	51.0	0.7	71	44	60	10	500	6	2,700	460/3	266x84x72	8,500	1,2,3,4,5
AHU-6	LEVEL 4	LEVEL 2 ADMIN EAST	72x96	VAV	16,500	3.5	5.9	–	PL	30	16,500	2.5	–	AF	15	2	8	21	13	289	62.5	80	0.2	15	180	140	10	500	2	528	289	80.9	62.6	54.5	51.0	0.7	66	44	60	10	500	6	2,100	460/3	241x96x72	8,500	1,2,3,4,5
AHU-7	LEVEL 4	LEVEL 3 ADMIN WEST	72x96	VAV	19,000	3.5	6.0	–	PL	40	19,000	2.5	–	AF	20	2	8	21	13	366	60.8	80	0.2	19	180	140	10	500	2	632	333	82.2	63.0	54.5	51.0	0.7	79	44	60	10	500	6	3,200	460/3	273x90x72	9,000	1,2,3,4,5
AHU-8	LEVEL 4	LEVEL 3 ADMIN EAST	84x84	VAV	16,500	3.5	6.0	–	PL	30	16,500	2.5	–	AF	15	2	8	21	13	276	63.3	80	0.2	14	180	140	10	500	2	518	289	80.4	62.4	54.5	51.0	0.7	65	44	60	10	500	6	1,800	460/3	300x84x84	8,600	1,2,3,4,5

1. PROVIDE PREMIUM EFFICIENCY INVERTER GRADE MOTORS.
2. ACTUAL OPERATION AT 2,200 FEET ABOVE SEA LEVEL.
3. FURNISH WITH DOUBLE WALL CONSTRUCTION FOR INTERIOR USE HAVING A MINIMUM 2" THICK 3 PCF INSULATION. FAN SECTIONS SHALL HAVE PERFORATED LINER. FURNISH WITH INTERNAL SPRING ISOLATORS HAVING 2" STATIC DEFLECTION WITH SEISMIC RESTRAINT FOR SUPPLY AND RETURN FANS. FURNISH WITH AIR FILTER HOUSING, MIXING BOX SECTION WITH OPPOSED BLADE LOW LEAKAGE DAMPERS, DOUBLE WALLED STAINLESS STEEL DRAIN PAN, AND INTERNAL PRE-WIRED LIGHTS.
4. PROVIDE VFD'S FOR BOTH SUPPLY AND RETURN FANS.
5. SEE SHEET M-603 FOR SOUND POWER SCHEDULE INFORMATION.

VARIABLE FREQUENCY DRIVE SCHEDULE

ITEM	SERVICE	MOTOR (HP)	V/PH	BYPASS	NOTES
VFD-1	AHU-1 (SUPPLY)	30	460/3	NO	1,2,3,4,5
VFD-2	AHU-1 (RETURN)	20	460/3	NO	1,2,3,4,5
VFD-3	AHU-2 (SUPPLY)	15	460/3	NO	1,2,3,4,5
VFD-4	AHU-2 (RETURN)	7.5	460/3	NO	1,2,3,4,5
VFD-5	AHU-3 (SUPPLY)	30	460/3	NO	1,2,3,4,5
VFD-6	AHU-3 (RETURN)	15	460/3	NO	1,2,3,4,5
VFD-7	AHU-4 (SUPPLY)	30	460/3	NO	1,2,3,4,5
VFD-8	AHU-4 (RETURN)	15	460/3	NO	1,2,3,4,5
VFD-9	AHU-5 (SUPPLY)	30	460/3	NO	1,2,3,4,5
VFD-10	AHU-5 (RETURN)	15	460/3	NO	1,2,3,4,5
VFD-11	AHU-6 (SUPPLY)	30	460/3	NO	1,2,3,4,5
VFD-12	AHU-6 (RETURN)	15	460/3	NO	1,2,3,4,5
VFD-13	AHU-7 (SUPPLY)	40	460/3	NO	1,2,3,4,5
VFD-14	AHU-7 (RETURN)	20	460/3	NO	1,2,3,4,5
VFD-15	AHU-8 (SUPPLY)	30	460/3	NO	1,2,3,4,5
VFD-16	AHU-8 (RETURN)	15	460/3	NO	1,2,3,4,5
VFD-17	CHWP-1	20	460/3	NO	1,2,3,4,5

VARIABLE FREQUENCY DRIVE SCHEDULE

ITEM	SERVICE	MOTOR (HP)	V/PH	BYPASS	NOTES
VFD-18	CHWP-2	20	460/3	NO	1,2,3,4,5
VFD-19	HWP-1	5	460/3	NO	1,2,3,4,5
VFD-20	HWP-2	5	460/3	NO	1,2,3,4,5
VFD-21	BP-1-1	5	460/3	YES	1,2,3,4,5
VFD-22	BP-1-2	5	460/3	YES	1,2,3,4,5
VFD-23	BP-1-3	2	460/3	YES	1,2,3,4,5
VFD-24	HCP-1	3	460/3	YES	1,2,3,4,5

1. PROVIDE WITH 5% INPUT LINE REACTOR, INPUT EMI/RFI FILTER AND DUAL ELEMENT LOW-PASS OUTPUT FILTER.
2. PROVIDE WITH INTEGRAL DISCONNECT.
3. ALL VFD'S HAVE TO BE BY A SINGLE MANUFACTURER.
4. COORDINATE SEPARATE INPUT AND OUTPUT LINE REACTORS WITH ELECTRICAL, INCLUDING THE MOUNTING LOCATION & REQUIRED CONDUIT AND WIRING BETWEEN VFD AND LINE REACTORS.
5. COORDINATE WITH ELECTRICAL CONTRACTOR TO PROVIDE DISCONNECTS ON THE LINE SIDE OF VFD, AND THAT LINE SIDE & LOAD SIDE WIRING FOR VFD IS ROUTED IN SEPARATE CONDUITS.

STEAM AND WATER HEAT EXCHANGER UNIT SCHEDULE

ITEM	LOCATION	SERVICE	–	TYPE	MBH	CIRCULATING FLUID					STEAM (PSIG)		CONTROL VALVE (LBS/HR)	MAX OPERATING WEIGHT (LBS)	NOTES
						FLOW (GPM)	FLUID	EWT (°F)	LWT (°F)	MAX PD (FT WG)	ENTERING CONTROL VALVE	ENTERING HX			
HX-1	BASEMENT MECHANICAL ROOM	SPACE HEATING HOT WATER	–	SHELL/TUBE	2,100	105	WATER	140	180	10	15	10	2,100	–	1, 2, 3, 4
HX-2	BASEMENT MECHANICAL ROOM	SPACE HEATING HOT WATER	–	SHELL/TUBE	2,100	105	WATER	140	180	10	15	10	2,100	–	1, 2, 3, 4

1. PROVIDE 4" HIGH HOUSEKEEPING PAD.
2. PROVIDE MANUFACTURER'S RECOMMENDED CLEARANCES FOR MAINTENANCE.
3. SYSTEM CONFIGURATION SHALL BE: 75% – 75%.
4. PROVIDE COMPLETE STEAM HEAT EXCHANGER PACKAGE ASME STAMPED FOR 150 PSIG WORKING PRESSURE WITH 316 STAINLESS STEEL TANK, DOUBLE WALLED HEAT EXCHANGER COMPLETE WITH FOAM IN PLACE INSULATION WATER PRESSURE GAUGE, ASME PRESSURE-TEMPERATURE RELIEF VALVE OF SUFFICIENT SIZE TO RELIEVE TOTAL BTU INPUT OF THE COIL, INCOMING STEAM STRAINER, ELECTRONIC CONTROL VALVE, FLOAT AND THERMOSTATIC STEAM TRAPS, CONDENSATE STRAINER, BRACES AND SUPPORTS AND CONTROLS FOR INTERFACE WITH EXISTING BUILDING MANAGEMENT SYSTEM. ENSURE THAT ALL COMPONENTS ARE PROVIDED FOR COMPLETE SYSTEM OPERATION.

FAN SCHEDULE

ITEM	LOCATION	SERVICE	MANUFACTURER MODEL NUMBER	TYPE	AIRFLOW (CFM)	ESP (IN WG)	RPM	BHP	MOTOR		MAX OPERATING WEIGHT (LBS)	NOTES
									HP	V/PH		
EF-1	EDUCATION CENTER ROOF	EDUCATION RESTROOMS	–	ROOF MOUNTED	1400	0.75	1545	0.35	1/2	115/1	100	1, 2, 3, 4
EF-2	EDUCATION CENTER ROOF	WELLNESS CENTER	–	ROOF MOUNTED	1940	1.0	1519	0.67	1	460/3	150	1, 2, 3, 4
EF-3	MECHANICAL PENTHOUSE	ADMIN RESTROOMS	–	INLINE	7200	1.75	1558	3.1	5	460/3	350	1, 3, 5, 7
SF-1	BASEMENT	BH003 ELECTRICAL	–	INLINE	100	0.3	1072	0.06	1/4	115/1	100	1, 3, 6, 7
SF-2	BASEMENT	BH004 ELECTRICAL	–	INLINE	100	0.3	1072	0.06	1/4	115/1	100	1, 3, 6, 7

1. OPERATION AT 2,200 FEET ABOVE SEA LEVEL.
2. SPUN CENTRIFUGAL UPBLAST BELT DRIVE FAN. FURNISH WITH MOTOR COVER/BELT GUARD, FACTORY ROOF CURB, AND BACKDRAFT DAMPER.
3. PROVIDE VIBRATION ISOLATION PER SPECIFICATIONS.
4. FACTORY PROVIDED STARTER AND DISCONNECT SELECTED FOR EXTERIOR USE.
5. MIXED FLOW BELT DRIVE FAN. FURNISH WITH MOTOR COVER/BELT GUARD AND MOTOR IN SIDE INSTALLATION POSITION.
6. BELT DRIVE CENTRIFUGAL FAN. FURNISH WITH MOTOR COVER/BELT GUARD.
7. FACTORY PROVIDED STARTER AND DISCONNECT SELECTED FOR INTERIOR USE.

CONSTRUCTION DOCUMENTS
BUILDING IS FULLY SPRINKLERED

10.0264

Revisions:	Date:
1 ADDENDUM 1	08/15/12

CONSULTANTS:

CIVIL: SLATER HANIFAN GROUP, 5740 S. ARVILLE ST. #216, LAS VEGAS, NV 89118
LANDSCAPE: J W ZUNINO LANDSCAPE ARCHITECTURE, 3191 S. JONES BLVD., LAS VEGAS, NV 89146
MEP: JBA CONSULTING ENGINEERING, 5155 WEST PATRICK LANE, LAS VEGAS, NV 89118
STRUCTURAL: DEGENKOLB ENGINEERING, 235 MONTGOMERY STREET, SUITE 500, SAN FRANSISCO CA 94104
GEOTECHNICAL: NINYO AND MOORE, 6700 PARADISE ROAD, SUITE E, LAS VEGAS, NV 89119
FIRE & LIFE SAFETY: LASALLE ENGINEERING, 1000 YORK ROAD, WILLOW GROVE, PA 19090

KEY PLAN

ARCHITECT/ENGINEERS:

RTKL
JMA ARCHITECTURE STUDIOS
A Joint Venture

Drawing Title: MECHANICAL - SCHEDULES
Scale: N.T.S.
Approved: Project Director
Project Title: VA Medical Center - PHASE V, Administration Bldg. & Education Ctr. Addition
Project Number: 593CA2202
Building Number: 6
Location: North Las Vegas, NV
Date: June 15, 2012
Checked: RCE
Drawn: EJP
Drawing Number: M-602
300 of 512

Office of Construction and Facilities Management
Department of Veterans Affairs

VA FORM 08-6231

AHU SOUND POWER SCHEDULE

ITEM	SOUND POWER LEVELS								NOTES
	63	125	250	500	1000	2000	4000	8000	
AHU-1 SA	100	100	100	97	93	87	83	78	1
AHU-1 RA	86	80	82	76	72	66	63	62	1, 2
AHU-2 SA	96	90	88	88	83	80	75	72	1
AHU-2 RA	86	87	80	81	77	72	68	66	1, 2
AHU-3 SA	100	98	99	97	93	86	82	78	1
AHU-3 RA	86	79	81	75	71	65	63	61	1, 2
AHU-4 SA	99	96	98	96	92	85	82	77	1
AHU-4 RA	85	79	80	74	71	65	62	61	1, 2
AHU-5 SA	100	98	99	97	93	86	82	78	1
AHU-5 RA	86	80	81	75	71	66	63	61	1, 2
AHU-6 SA	100	98	99	97	93	86	82	78	1
AHU-6 RA	86	79	81	75	71	65	63	61	1, 2
AHU-7 SA	101	101	102	99	94	88	84	79	1
AHU-7 RA	87	81	83	77	72	67	64	62	1, 2
AHU-8 SA	100	98	99	97	93	86	82	78	1
AHU-8 RA	86	79	81	75	71	65	63	61	1, 2

1. SEE SHEET M-602 FOR ADDITIONAL AIR HANDLING UNIT SCHEDULE INFORMATION.
2. RETURN AIR SOUND POWERS ARE ESTIMATED USING 100% OF UNIT FLOW.

FAN COIL UNIT SCHEDULE

ITEM	SERVICE	TYPE	MODEL NUMBER	SUPPLY AIRFLOW (CFM)	ESP (IN-WG)	SPEED	COOLING COIL											HEATING COIL								ELECTRICAL		NOTES
							ROWS	TOTAL (MBH)	SENSIBLE (MBH)	GPM	MAX PD (H)	EWT (°F)	LWT (°F)	EAT (°F DB)	EAT (°F WB)	LAT (°F DB)	LAT (°F WB)	ROWS	TOTAL	GPM	MAX PD (H)	EAT (°F DB)	LAT (°F WB)	EWT (°F)	LWT (°F)	V/PH	MOTOR HP	
FC-B-1	BASEMENT ELECT RM	BELT DRIVE	–	3000	0.3	–	8	100.7	100.7	18	6	44	61	85	64	51.7	51.3	–	–	–	–	–	–	–	–	460/3	2	1, 2, 4, 6
FC-B-2	BASEMENT ELECT RM	BELT DRIVE	–	3000	0.3	–	8	100.7	100.7	18	6	44	61	85	64	51.7	51.3	–	–	–	–	–	–	–	–	460/3	2	1, 2, 4, 6
FC-B-3	BASEMENT MECH RM	BELT DRIVE	–	3000	0.3	–	8	100.7	100.7	18	6	44	61	85	64	51.7	51.3	–	–	–	–	–	–	–	–	460/3	2	1, 3, 4, 6
FC-B-4	BASEMENT ELEV LOBBY	BELT DRIVE	–	1900	0.75	–	6	45.9	43.9	7	4	44	57	75	61	52.2	51.6	1	52.7	1.5	2	70	97.6	180	140	460/3	1 1/2	1, 3, 4, 6
FC-1-1	EDUCATION VESTIBULE	DIRECT DRIVE	–	320	0.3	HIGH	4	8.0	7.0	2	2.5	44	52	75	61	53.2	51.2	1	10.5	1	1	70	102.7	180	158	115/1	1/8	1, 3, 5, 6, 7
FC-1-2	CONNECTOR VESTIBULE	DIRECT DRIVE	–	320	0.3	HIGH	4	8.0	7.0	2	2.5	44	52	75	61	53.2	51.2	1	10.5	1	1	70	102.7	180	158	115/1	1/8	1, 3, 5, 6, 7
FC-1-3	EDUCATION ELECT RM	DIRECT DRIVE	–	1445	0.3	HIGH	4	27.5	27.5	4.6	3	44	56	85	64	56.1	53.7	–	–	–	–	–	–	–	–	115/1	1/8	1, 3, 5, 6, 7
FC-1-4	ADMIN ELECT RM	DIRECT DRIVE	–	1445	0.3	HIGH	4	27.5	27.5	4.6	3	44	56	85	64	56.1	53.7	–	–	–	–	–	–	–	–	–	–	1, 3, 5, 6, 7
FC-1-5	CONNECTOR VESTIBULE	DIRECT DRIVE	–	320	0.3	HIGH	4	8.0	7.0	2	2.5	44	52	75	61	53.2	51.2	1	10.5	1	1	70	102.7	180	158	115/1	1/8	1, 3, 5, 6, 7
FC-1-6	ADMIN VESTIBULE	DIRECT DRIVE	–	680	0.3	HIGH	6	17.5	16.1	3.5	2	44	54	75	61	51.4	50.9	1	20.1	1	1.51	70	99.5	180	140	115/1	1/5	1, 3, 5, 6, 7
FC-2-1	ADMIN ELECT RM	DIRECT DRIVE	–	1445	0.3	HIGH	4	27.5	27.5	4.6	3	44	56	75	61	56.1	53.7	–	–	–	–	–	–	–	–	115/1	2 (1/5)	1, 3, 5, 6, 7
FC-3-1	ADMIN ELECT RM	DIRECT DRIVE	–	1445	0.3	HIGH	4	27.5	27.5	4.6	3	44	56	75	61	56.1	53.7	–	–	–	–	–	–	–	–	115/1	2 (1/5)	1, 3, 5, 6, 7
FC-P-1	ADMIN PENTHOUSE MECH RM	DIRECT DRIVE	–	1445	0.3	HIGH	4	27.5	27.5	4.6	3	44	56	75	61	56.1	53.7	1	44.5	3	6	70	100.6	180	150	115/1	2 (1/5)	1, 3, 5, 6, 7
FC-P-2	ADMIN PENTHOUSE MECH RM	DIRECT DRIVE	–	1445	0.3	HIGH	4	27.5	27.5	4.6	3	44	56	75	61	56.1	53.7	1	44.5	3	6	70	100.6	180	150	115/1	2 (1/5)	1, 3, 5, 6, 7
FC-P-3	ADMIN PENTHOUSE MECH RM	DIRECT DRIVE	–	1445	0.3	HIGH	4	27.5	27.5	4.6	3	44	56	75	61	56.1	53.7	1	44.5	3	6	70	100.6	180	150	115/1	2 (1/5)	1, 3, 5, 6, 7
FC-P-4	ADMIN PENTHOUSE MECH RM	DIRECT DRIVE	–	1445	0.3	HIGH	4	27.5	27.5	4.6	3	44	56	75	61	56.1	53.7	1	44.5	3	6	70	100.6	180	150	115/1	2 (1/5)	1, 3, 5, 6, 7
FC-P-5	EDUCATION PENTHOUSE MECH RM	DIRECT DRIVE	–	1445	0.3	HIGH	4	27.5	27.5	4.6	3	44	56	75	61	56.1	53.7	1	44.5	3	6	70	100.6	180	150	115/1	2 (1/5)	1, 3, 5, 6, 7
FC-P-6	EDUCATION PENTHOUSE MECH RM	DIRECT DRIVE	–	1445	0.3	HIGH	4	27.5	27.5	4.6	3	44	56	75	61	56.1	53.7	1	44.5	3	6	70	100.6	180	150	115/1	2 (1/5)	1, 3, 5, 6, 7
FC-P-7	ELEVATOR CONTROL ROOM	DIRECT DRIVE	–	1445	0.3	HIGH	4	27.5	27.5	4.6	3	44	56	85	64	56.1	53.7	–	–	–	–	–	–	–	–	115/1	2 (1/5)	1, 3, 5, 6, 7

1. ACTUAL OPERATION AT 2,200 FEET ABOVE SEA LEVEL.
2. VERTICAL UNIT, MOUNT ON 4" HOUSEKEEPING PAD.
3. HORIZONTAL UNIT, HANG FROM STRUCTURE WITH VIBRATION ISOLATION PER SPECIFICATIONS.
4. 2" MERV 8 FILTER.
5. 1" THROWAWAY FILTER.
6. FURNISH FAN COIL WITH PACKAGE INCLUDING STRAINER, BALL TYPE SHUT-OFF VALVES, FLOW CONTROL DEVICE AND FLEXIBLE PIPE CONNECTIONS, AND FOIL FACED INSULATION WITHIN CABINET.
7. PROVIDE UNIT WITH THREE SPEED FAN CONTROLLER.

CRAC UNIT SCHEDULE

ITEM	SERVICE	SUPPLY AIRFLOW	ESP	COOLING COIL									REHEAT COIL		HUMIDIFIER		ELECTRICAL				WEIGHT	NOTES
				ROWS	TOTAL	SENSIBLE	GPM	EWT (°F)	LWT (°F)	EAT (°F DB)	EAT (°F WB)	MAX PD (FT)	TOTAL (KW)	STAGES	KW	LBS/HR	V/PH	FLA	MCA	MOCP		
CRAC-1-1	ADMIN TELECOM RM	2,500	0.5	4	64.7	53.7	11.1	44	54	80	67	15.5	7.5	1	3.4	10	460/3	12.2	15.3	20	550	1
CRAC-1-2	EDUCATION TELECOM RM	900	0.5	4	25.5	18.3	4.3	44	54	80	67	17.0	7.5	1	3.4	10	460/3	10.8	13.6	15	350	1
CRAC-2-1	ADMIN TELECOM RM	2,500	0.5	4	64.7	53.7	11.1	44	54	80	67	15.5	7.5	1	3.4	10	460/3	12.2	15.3	20	550	1
CRAC-3-1	ADMIN TELECOM RM	2,500	0.5	4	64.7	53.7	11.1	44	54	80	67	15.5	7.5	1	3.4	10	460/3	12.2	15.3	20	550	1

1

1. ACTUAL OPERATION AT 2,200 FEET ABOVE SEA LEVEL.

1

2. WATER COOLED SELF CONTAINED-PACKAGED COMPUTER ROOM COOLING UNIT WITH HUMIDIFICATION AND REHEAT. UNIT SHALL BE FACTORY ASSEMBLED, INTERNALLY WIRED, PIPED, AND FACTORY RUN TESTED WITH HORIZONTAL SUPPLY AND RETURN AIR CONNECTIONS. UNIT SHALL BE FURNISHED WITH MICROPROCESSOR CONTROL PANEL, CHILLED WATER COOLING COIL LEAK TESTED AT 250 PSIG, 2-WAY MOTORIZED CONTROL VALVE, PIPING PACKAGE WITH STRAINER, AUTO-FLOW TYPE BALANCING VALVE, BALL TYPE SHUT-OFF VALVES AND FLEXIBLE PIPE CONNECTIONS, ELECTRIC REHEAT, STEAM GENERATING MODULATING HUMIDIFIER, 2" MERV 8 FILTERS, BLOWER-MOTOR ASSEMBLY, 1" INTERNAL INSULATION WITHIN CABINET, AND GALVANIZED CONDENSATE DRAIN PAN WITH WATER OVERFLOW SENSOR TO DE-ENERGIZE UNIT UPON SENSING OF IMPENDING CONDENSATE OVERFLOW AND SEND AN ALARM SIGNAL TO THE EMCS. UNIT SHALL BE ETL LISTED AS A PACKAGE. UNIT SHALL NOT CONTAIN REFRIGERANT.

PUMP SCHEDULE

ITEM	LOCATION	SERVICE	CONFIGURATION	TYPE	MEDIUM & TEMP	FLOW (GPM)	FLOW TYPE	HEAD (FT WC)	MINIMUM EFF (%)	MINIMUM SHUT OFF HEAD (FT WC)	BHP	MOTOR			NOTES
												RPM	HP	V/PH	
CHWP-1	BASEMENT MECH ROOM	CHILLED WATER	BASE MOUNTED END SUCTION	CENTRIFUGAL	WATER 42°	600	–	80	80.3	100	15.2	1,750	20	460/3	1, 2, 3, 4, 5, 6, 7
CHWP-2	BASEMENT MECH ROOM	CHILLED WATER	BASE MOUNTED END SUCTION	CENTRIFUGAL	WATER 42°	600	–	80	80.3	100	15.2	1,750	20	460/3	1, 2, 3, 4, 5, 6, 7
HWP-1	BASEMENT MECH ROOM	HEATING WATER	BASE MOUNTED END SUCTION	CENTRIFUGAL	WATER 180°	105	–	80	62.1	90	3.5	1,750	5	460/3	1, 2, 3, 4, 5, 6, 7
HWP-2	BASEMENT MECH ROOM	HEATING WATER	BASE MOUNTED END SUCTION	CENTRIFUGAL	WATER 180°	105	–	80	62.1	90	3.5	1,750	5	460/3	1, 2, 3, 4, 5, 6, 7

1. PROVIDE 4" HIGH HOUSEKEEPING PAD.
2. PROVIDE CONCENTRIC INCREASER, ECCENTRIC REDUCER ON DISCHARGE/SUCTION SIDE.
3. PROVIDE SUCTION DIFFUSER WITH MAXIMUM 1 PSI PRESSURE DROP. PROVIDE 3/4" HOSE THREAD BLOW DOWN VALVE.
4. BRONZE FITTED WITH EPR/SIC/SIC MECHANICAL SEALS.
5. PUMP SHALL BE WITH NON-OVERLOADING IMPELLER.
6. PROVIDE PREMIUM EFFICIENCY MOTOR.
7. SYSTEM CONFIGURATION SHALL BE: 75% - 75%

CONSTRUCTION DOCUMENTS
BUILDING IS FULLY SPRINKLERED

10.0264

1	ADDENDUM 1	08/15/12
Revisions:		Date:

CONSULTANTS:

CIVIL: SLATER HANIFAN GROUP, 5740 S. ARVILLE ST. #216, LAS VEGAS, NV 89118
LANDSCAPE: J W ZUNINO LANDSCAPE ARCHITECTURE, 3191 S. JONES BLVD., LAS VEGAS, NV 89146
MEP: JBA CONSULTING ENGINEERING, 5155 WEST PATRICK LANE, LAS VEGAS, NV 89118
STRUCTURAL: DEGENKOLB ENGINEERING, 235 MONTGOMERY STREET, SUITE 500, SAN FRANSISCO CA 94104
GEOTECHNICAL: NINYO AND MOORE, 6700 PARADISE ROAD, SUITE E, LAS VEGAS, NV 89119
FIRE & LIFE SAFETY: LASALLE ENGINEERING, 1000 YORK ROAD, WILLOW GROVE, PA 19090

KEY PLAN

ARCHITECT/ENGINEERS:

RTKL
JMA ARCHITECTURE STUDIOS
A Joint Venture

Drawing Title: MECHANICAL - SCHEDULES
Scale: N.T.S.
Approved: Project Director

Project Title: VA Medical Center - PHASE V, Administration Bldg. & Education Ctr. Addition
Location: North Las Vegas, NV
Date: June 15, 2012 | Checked: RCE | Drawn: EJP

Project Number: 593CA2202
Building Number: 6
Drawing Number: M-603
301 of 512

Office of Construction and Facilities Management
Department of Veterans Affairs

METERING UNIT SCHEDULE

ITEM	LOCATION	SERVICE	MANUFACTURER MODEL NUMBER	TYPE	CAPACITY (LBS/HR) (GPM)	SIZE (INCHES)	NOTES
FM-001	BASEMENT	STEAM	–	–	7500 LBS/HR	1 3	1, 2, 3
FM-002	BASEMENT	CHILLED WATER	–	–	800 GPM	8	1, 2, 3, 4
FM-003	BASEMENT	HEATING WATER	–	–	140 GPM	4	1, 2, 3, 4
FM-004	BASEMENT	SOLAR LOOP SHCP-1	–	–	5 GPM	1	1, 2, 3, 4
FM-005	BASEMENT	SOLAR LOOP SHCP-2	–	–	15 GPM	1-1/2	1, 2, 3, 4
FM-006	BASEMENT	DOMESTIC HOT WATER	–	–	35 GPM	2	1, 2, 3, 4

1. INSTALL ELECTROMAGNETIC FLOW METERS PER MANUFACTURER'S INSTALLATION INSTRUCTIONS. PROVIDE MINIMUM 3 TIMES THE PIPE DIAMETER STRAIGHT RUN ON INLET/OUTLET SIDE.
2. PROVIDE ANALOG/ DIGITAL OUTPUT FOR REMOTE MONITORING THROUGH BMS.
3. FLOW METER SHALL HAVE DATA LOGGING CAPABILITIES.
4. PROVIDE AND TEMPERATURE SENSORS WITH BMS OUTPUT FOR ENERGY MONITORING.

AIR SEPARATOR SCHEDULE

ITEM	SERVICE	TYPE	MAXIMUM FLOW RATE (GPM)	INLET / OUTLET SIZE (IN)	MAXIMUM PRESSURE DROP (FT)	MAX OPERATING WEIGHT (LBS)	NOTES
AS-1	HEATING HOT WATER	VORTEX	210	3	2	250	–

CONDENSATE PUMP UNIT SCHEDULE

ITEM	LOCATION	SERVICE	MANUFACTURER MODEL NUMBER	TYPE	MEDIUM	FLOW (GPM)	TANK VOLUME (GAL)	HEAD (FT WC)	MAX LIQUID TEMP (°F)	SHUT OFF HEAD (FT WC)	MOTOR			NOTES
											RPM	HP	V/PH	
CP-1-1	ADMIN LEVEL 1	CRAC-1-1	–	VERTICAL	CONDENSATE	3	1.0	24	212	30	3450	1/10	115/1	1, 2, 3
CP-1-2	EDUCATION LEVEL 1	FC-1-1	–	VERTICAL	CONDENSATE	3	1.0	24	212	30	3450	1/10	115/1	1, 2, 3
CP-1-3	EDUCATION LEVEL 1	FC-1-3	–	VERTICAL	CONDENSATE	3	1.0	24	212	30	3450	1/10	115/1	1, 2, 3
CP-1-4	ADMIN LEVEL 1	FC-1-4	–	VERTICAL	CONDENSATE	3	1.0	24	212	30	3450	1/10	115/1	1, 2, 3
CP-1-5	EDUCATION LEVEL 1	CRAC-1-2	–	VERTICAL	CONDENSATE	3	1.0	24	212	30	3450	1/10	115/1	1, 2, 3
CP-1-6	ADMIN LEVEL 1	FC-1-6	–	VERTICAL	CONDENSATE	3	1.0	24	212	30	3450	1/10	115/1	1, 2, 3
CP-1-7	CONNECTOR LEVEL 1	FC-1-2	–	VERTICAL	CONDENSATE	3	1.0	24	212	30	3450	1/10	115/1	1, 2, 3
CP-1-8	CONNECTOR LEVEL 1	FC-1-5	–	VERTICAL	CONDENSATE	3	1.0	24	212	30	3450	1/10	115/1	1, 2, 3
CP-2-1	ADMIN LEVEL 2	FC-2-1	–	VERTICAL	CONDENSATE	3	1.0	24	212	30	3450	1/10	115/1	1, 2, 3
CP-2-2	ADMIN LEVEL 2	CRAC-2-1	–	VERTICAL	CONDENSATE	3	1.0	24	212	30	3450	1/10	115/1	1, 2, 3
CP-3-1	ADMIN LEVEL 3	FC-3-1	–	VERTICAL	CONDENSATE	3	1.0	24	212	30	3450	1/10	115/1	1, 2, 3
CP-3-2	ADMIN LEVEL 3	CRAC-3-1	–	VERTICAL	CONDENSATE	3	1.0	24	212	30	3450	1/10	115/1	1, 2, 3

1. PROVIDE HANGERS AND SUPPORTS AS REQUIRED TO SUSPEND UNIT FROM STRUCTURE ABOVE.
2. PROVIDE UNIT WITH CAST ALUMINUM RESERVOIR, AUXILIARY SAFETY SWITCH, STAINLESS STEEL MOTOR SHAFT, THERMAL OVERLOAD PROTECTION, BRASS CHECK VALVE AT DISCHARGE, AND HARDWIRED CONNECTION. ENSURE THAT UNIT IS UL/CSA LISTED AND THAT ALL MATERIALS ARE NON-COMBUSTIBLE AND PLENUM RATED.
3. CONNECT CONDENSATE PUMP SAFETY SWITCH WITH ASSOCIATED CONDENSING UNITS TO SHUT DOWN CONDENSING UNIT UPON SENSING IMPENDING OVERFLOW.

EXPANSION TANK UNIT SCHEDULE

ITEM	SERVICE	TYPE	ACCEPTANCE VOLUME (GAL)	DIMENSIONS (DIA/H) (IN)	ASME RATED PRESSURE (PSI)	SYSTEM TEMP (°F)		SYSTEM PRESSURE AT TANK (PSI)		MAX OPERATING WEIGHT (LBS)	NOTES
						MIN	MAX	MIN	MAX		
ET-1	HEATING HOT WATER	BLADDER	106	30/49	125	60	180	15	112.5	1200	1, 2

1. PROVIDE A 4" HOUSEKEEPING PAD.
2. ASME PRE-CHARGED EXPANSION TANK WITH REMOVABLE HEAVY-DUTY BUTYL RUBBER BLADDER. FURNISH PRE-CHARGED TO 45 PSI WITH 1-1/2" NPT SYSTEM CONNECTION AND 0.302"-32 CHARGING VALVE CONNECTION.

CONDENSATE RECEIVING UNIT SCHEDULE

ITEM	SERVICE	TYPE	CAPACITY (LBS/HR)	RECEIVER TANK VOLUME (GAL)	CONDENSATE INLET PRESSURE (PSIG)	CONDENSATE DISCHARGE PRESSURE (PSIG)	MOTIVE STEAM INLET PRESSURE (PSIG)	MAX OPERATING WEIGHT (LBS)	NOTES
CRU-1	HEATING HOT WATER	PRESSURE POWERED	5000	50	0	50	125	1100	1 1, 2, 3
CRU-2	DOMESTIC HOT WATER	PRESSURE POWERED	2500	50	0	50	125	1100	1, 2, 3

1. PROVIDE A DUPLEX PACKAGED PRESSURE POWERED CONDENSATE RECEIVING UNIT AS A COMPLETE SYSTEM WITH A MAXIMUM OPERATING PRESSURE OF 125 PSIG, ASME CODE CARBON STEEL RECEIVER TANK, CHECK VALVES, INCOMING STEAM STRAINER, CONDENSATE STRAINER, STEAM TRAP, SHUTOFF VALVES, AND ACCESSORIES PRE-PIPED FOR A COMPLETE AND OPERABLE SYSTEM. PUMPS SHALL REQUIRE NO ELECTRICITY FOR OPERATION. PROVIDE ADDITIONAL STEAM PRESSURE REDUCING VALVES FOR EACH CONDENSATE RECEIVING UNIT AS REQUIRED BASED UPON EXISTING STEAM SYSTEM PRESSURE.
2. INSTALL UNIT RECEIVER TANK AND INLET TO ALLOW FOR GRAVITY DRAINAGE OF CONDENSATE FROM STEAM TRAPS. COORDINATE EXACT MOUNTING HEIGHT AND LOCATION PRIOR TO INSTALLATION.

1 3. PROVIDE A 4" HOUSEKEEPING PAD.

STEAM PRESSURE REDUCING STATION SCHEDULE

ITEM	LOCATION	SERVICE	PEAK CAPACITY (LBS/HR)	INLET PRESSURE (PSIG)	DISCHARGE PRESSURE (PSIG)	MAX OPERATING WEIGHT (LBS)	NOTES
PRV-1	BASEMENT MECHANCIAL RM	STEAM	(1) 2500 (1) 5000	125	15	100	1, 2

1. PROVIDE A COMPLETE PRESSURE REDUCING STATION WITH FULLY MODULATING STEAM VALVES AND PRESSURE ADJUSTMENT FROM 10-20 PSI DISCHARGE PRESSURE.
2. SYSTEM CONFIGURATION SHALL BE: 67% – 33%.

STEAM TRAP SCHEDULE

ITEM	LOCATION	SERVICE	TYPE	PEAK CAPACITY (LBS/HR)	OPERATING STEAM PRESSURE (PSIG)	OPERATING CONDENSATE PRESSURE (PSIG)	MAX OPERATING WEIGHT (LBS)	NOTES
HPST-1	BASEMENT MECHANCIAL RM	HPS STEAM MAIN	THERMODYNAMIC	7500	125	0	–	1
HPST-2	BASEMENT MECHANCIAL RM	PRV-1	THERMODYNAMIC	7500	125	0	–	1

1. PROVIDE A FULLY MODULATING STEAM VALVE AND PRESSURE REDUCING STATION WITH PRESSURE ADJUSTMENT FROM 10-20 PSI DISCHARGE PRESSURE.

CONSTRUCTION DOCUMENTS
BUILDING IS FULLY SPRINKLERED

10.0264

1 ADDENDUM 1	08/15/12
Revisions:	Date:

CONSULTANTS:

CIVIL: SLATER HANIFAN GROUP, 5740 S. ARVILLE ST. #216, LAS VEGAS, NV 89118
LANDSCAPE: J W ZUNINO LANDSCAPE ARCHITECTURE, 3191 S. JONES BLVD., LAS VEGAS, NV 89146
MEP: JBA CONSULTING ENGINEERING, 5155 WEST PATRICK LANE, LAS VEGAS, NV 89118
STRUCTURAL: DEGENKOLB ENGINEERING, 235 MONTGOMERY STREET, SUITE 500, SAN FRANSISCO CA 94104
GEOTECHNICAL: NINYO AND MOORE, 6700 PARADISE ROAD, SUITE E, LAS VEGAS, NV 89119
FIRE & LIFE SAFETY: LASALLE ENGINEERING, 1000 YORK ROAD, WILLOW GROVE, PA 19090

KEY PLAN

ARCHITECT/ENGINEERS:

RTKL
JMA ARCHITECTURE STUDIOS
A Joint Venture

Drawing Title: MECHANICAL - SCHEDULES
Scale: N.T.S.
Approved: Project Director: Milan Arsikin
Project Title: VA Medical Center - PHASE V, Administration Bldg. & Education Ctr. Addition
Location: North Las Vegas, NV
Date: June 15, 2012 | Checked: RCE | Drawn: EJP
Project Number: 593CA2202
Building Number: 6
Drawing Number: M-604
302 of 512

Office of Construction and Facilities Management
Department of Veterans Affairs

VA FORM 08-6231

NOTICE

1 ISOMETRIC FOR REFERENCE ONLY. USE FLOOR PLANS, DETAILS, SCHEMATICS, AND SPECIFICATIONS FOR CONSTRUCTION.

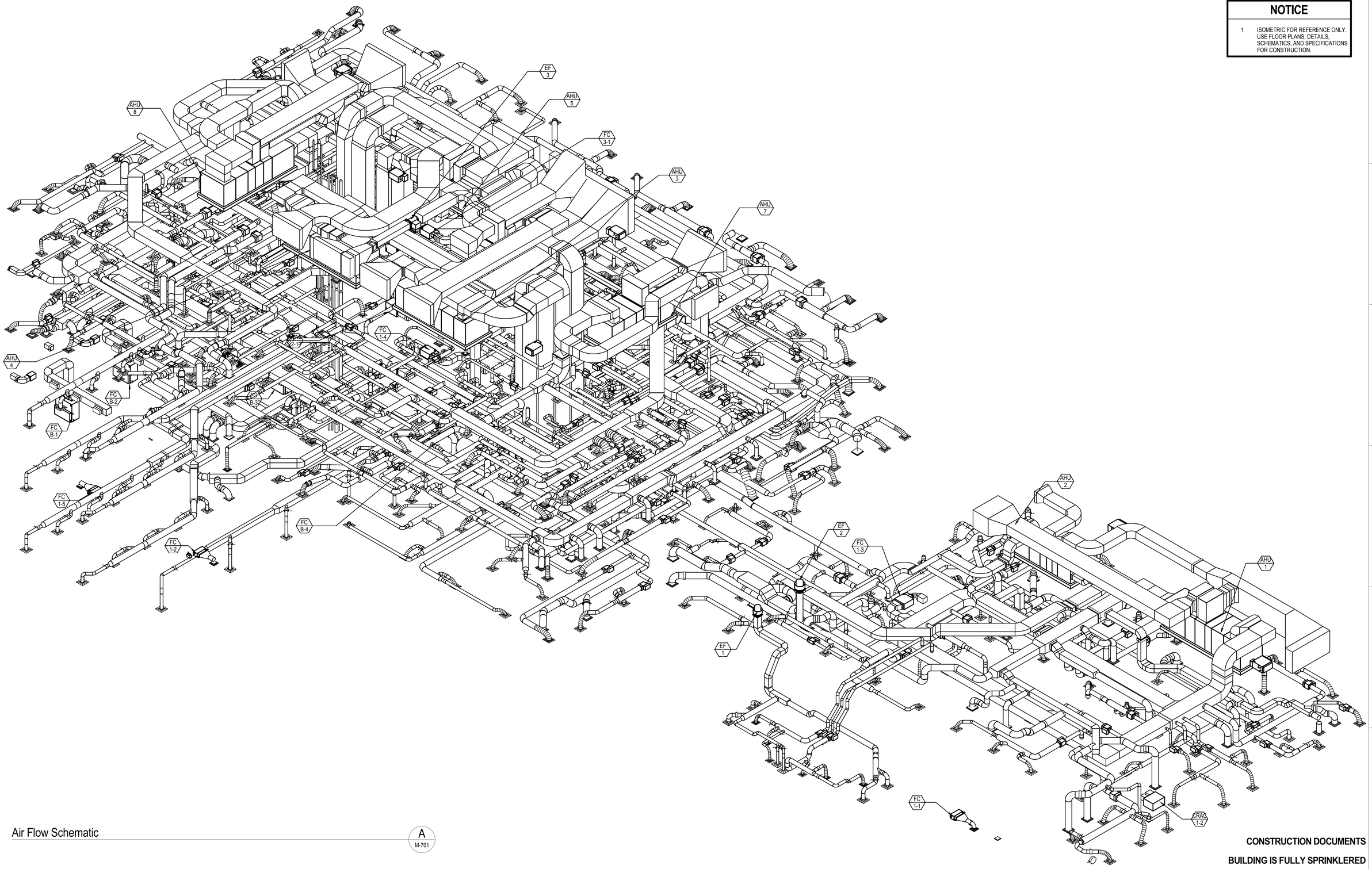

Air Flow Schematic

A
M-701

CONSTRUCTION DOCUMENTS

BUILDING IS FULLY SPRINKLERED

10.0264

Revisions:	Date:

CONSULTANTS:

CIVIL:	SLATER HANIFAN GROUP, 5740 S. ARVILLE ST. #216, LAS VEGAS, NV 89118
LANDSCAPE:	J W ZUNINO LANDSCAPE ARCHITECTURE, 3191 S. JONES BLVD., LAS VEGAS, NV 89146
MEP:	JBA CONSULTING ENGINEERING, 5155 WEST PATRICK LANE, LAS VEGAS, NV 89118
STRUCTURAL:	DEGENKOLB ENGINEERING, 235 MONTGOMERY STREET, SUITE 500, SAN FRANSISCO CA 94104
GEOTECHNICAL:	NINYO AND MOORE, 6700 PARADISE ROAD, SUITE E, LAS VEGAS, NV 89119
FIRE & LIFE SAFETY:	LASALLE ENGINEERING, 1000 YORK ROAD, WILLOW GROVE, PA 19090

KEY PLAN

ARCHITECT/ENGINEERS:

RTKL
JMA ARCHITECTURE STUDIOS
A Joint Venture

Drawing Title: Air Flow Overall Isometric

Scale

Approved: Project Director

Milan Arsikin

Project Title: VA Medical Center - PHASE V, Administration Bldg. & Education Ctr. Addition

Location: North Las Vegas, NV

Date	Checked	Drawn
June 15, 2012	Checker	Author

Project Number: 593CA2202

Building Number: 6

Drawing Number: M-701

303 of 512

Office of Construction and Facilities Management

Department of Veterans Affairs

VA FORM 08-6231

NOTICE

1 ISOMETRIC FOR REFERENCE ONLY. USE FLOOR PLANS, DETAILS, SCHEMATICS, AND SPECIFICATIONS FOR CONSTRUCTION.

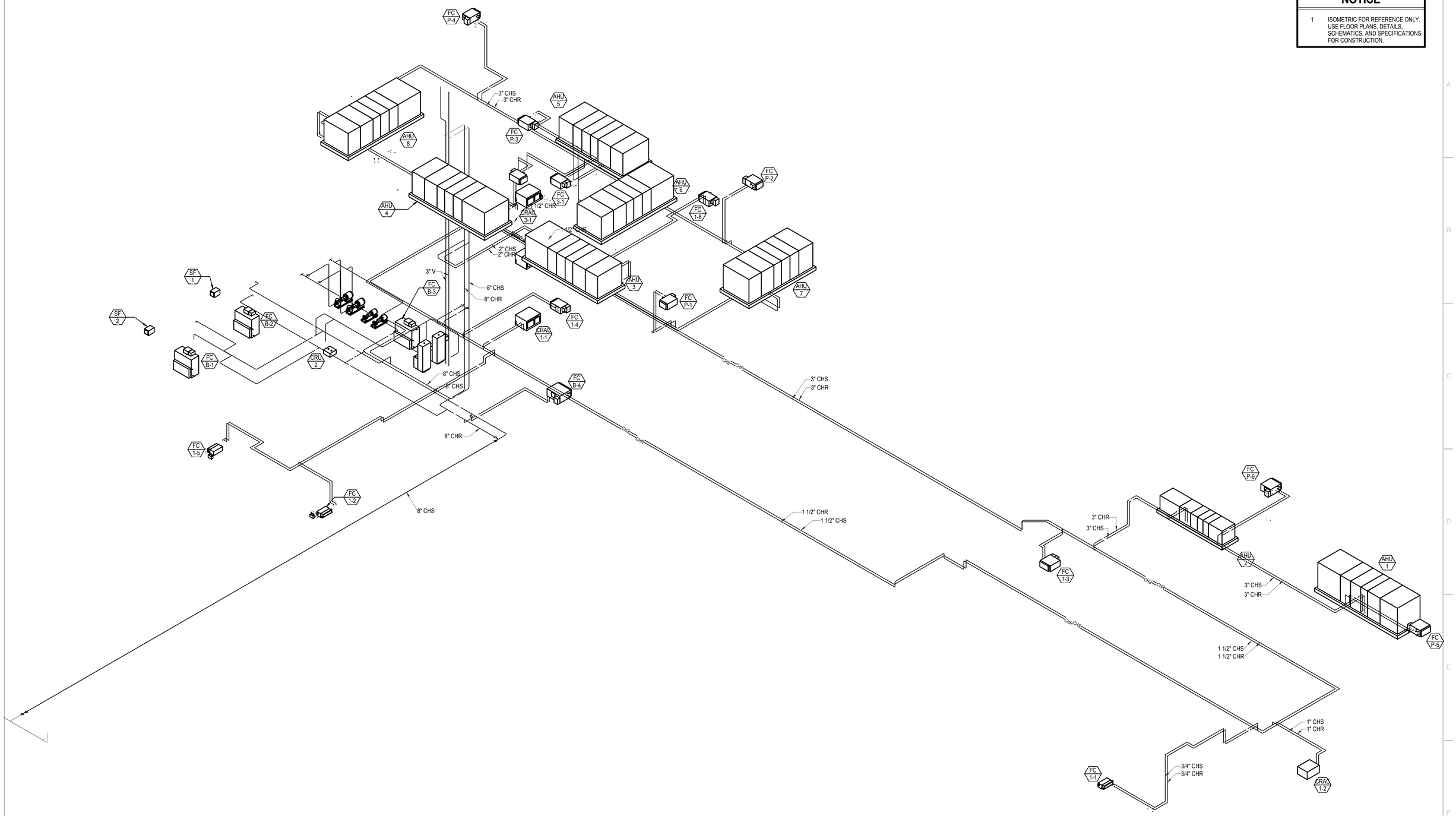

Chilled Water Piping Schematic

1
M-702

CONSTRUCTION DOCUMENTS

BUILDING IS FULLY SPRINKLERED

10.0264

Revisions:	Date:

CONSULTANTS:

CIVIL:	SLATER HANIFAN GROUP, 5740 S. ARVILLE ST. #216, LAS VEGAS, NV 89118
LANDSCAPE:	J W ZUNINO LANDSCAPE ARCHITECTURE, 3191 S. JONES BLVD., LAS VEGAS, NV 89146
MEP:	JBA CONSULTING ENGINEERING, 5155 WEST PATRICK LANE, LAS VEGAS, NV 89118
STRUCTURAL:	DEGENKOLB ENGINEERING, 235 MONTGOMERY STREET, SUITE 500, SAN FRANSISCO CA 94104
GEOTECHNICAL:	NINYO AND MOORE, 6700 PARADISE ROAD, SUITE E, LAS VEGAS, NV 89119
FIRE & LIFE SAFETY:	LASALLE ENGINEERING, 1000 YORK ROAD, WILLOW GROVE, PA 19090

KEY PLAN

ARCHITECT/ENGINEERS:

RTKL
JMA ARCHITECTURE STUDIOS
A Joint Venture

Drawing Title
Chilled Water Piping Overall Isometric

Scale

Approved: Project Director

Milan Drakic

Project Title
VA Medical Center - PHASE V, Administration Bldg. & Education Ctr. Addition

Location
North Las Vegas, NV

Date	Checked	Drawn
June 15, 2012	Checker	Author

Project Number
593CA2202

Building Number
6

Drawing Number
M-702

304 of 512

Office of Construction and Facilities Management

Department of Veterans Affairs

VA FORM 08-6231

NOTICE

1 ISOMETRIC FOR REFERENCE ONLY. USE FLOOR PLANS, DETAILS, SCHEMATICS, AND SPECIFICATIONS FOR CONSTRUCTION.

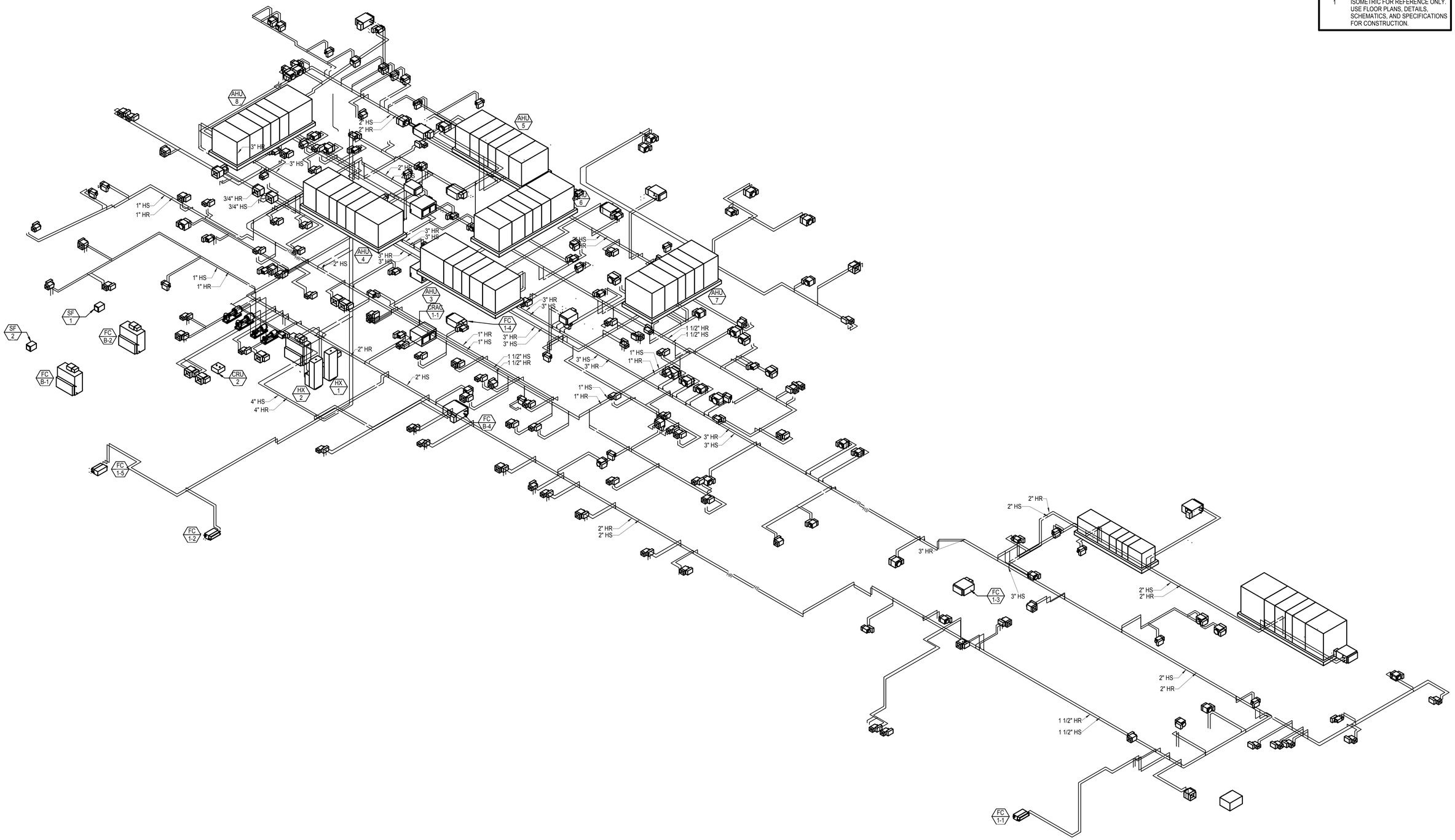

Heating Water Piping Schematic

1
M-703

CONSTRUCTION DOCUMENTS

BUILDING IS FULLY SPRINKLERED

10.0264

Revisions:	Date:

CONSULTANTS:

CIVIL:	SLATER HANIFAN GROUP, 5740 S. ARVILLE ST. #216, LAS VEGAS, NV 89118
LANDSCAPE:	J W ZUNINO LANDSCAPE ARCHITECTURE, 3191 S. JONES BLVD., LAS VEGAS, NV 89146
MEP:	JBA CONSULTING ENGINEERING, 5155 WEST PATRICK LANE, LAS VEGAS, NV 89118
STRUCTURAL:	DEGENKOLB ENGINEERING, 235 MONTGOMERY STREET, SUITE 500, SAN FRANSISCO CA 94104
GEOTECHNICAL:	NINYO AND MOORE, 6700 PARADISE ROAD, SUITE E, LAS VEGAS, NV 89119
FIRE & LIFE SAFETY:	LASALLE ENGINEERING, 1000 YORK ROAD, WILLOW GROVE, PA 19090

KEY PLAN

ARCHITECT/ENGINEERS:

RTKL
JMA ARCHITECTURE STUDIOS
A Joint Venture

Drawing Title: Heating Water Piping Overall Isometric

Scale

Approved: Project Director

Project Title: VA Medical Center - PHASE V, Administration Bldg. & Education Ctr. Addition

Location: North Las Vegas, NV

Date: June 15, 2012 | Checked: Checker | Drawn: Author

Project Number: 593CA2202

Building Number: 6

Drawing Number: M-703

305 of 512

Office of Construction and Facilities Management

Department of Veterans Affairs

VA FORM 08-6231

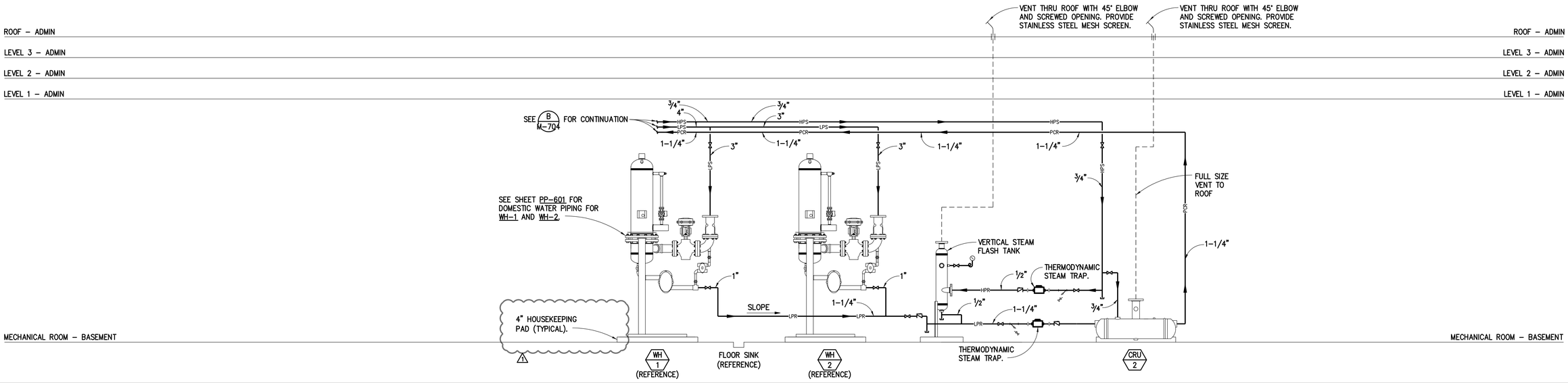

DOMESTIC WATER/STEAM FLOW DIAGRAM (A / M-704)

NO SCALE

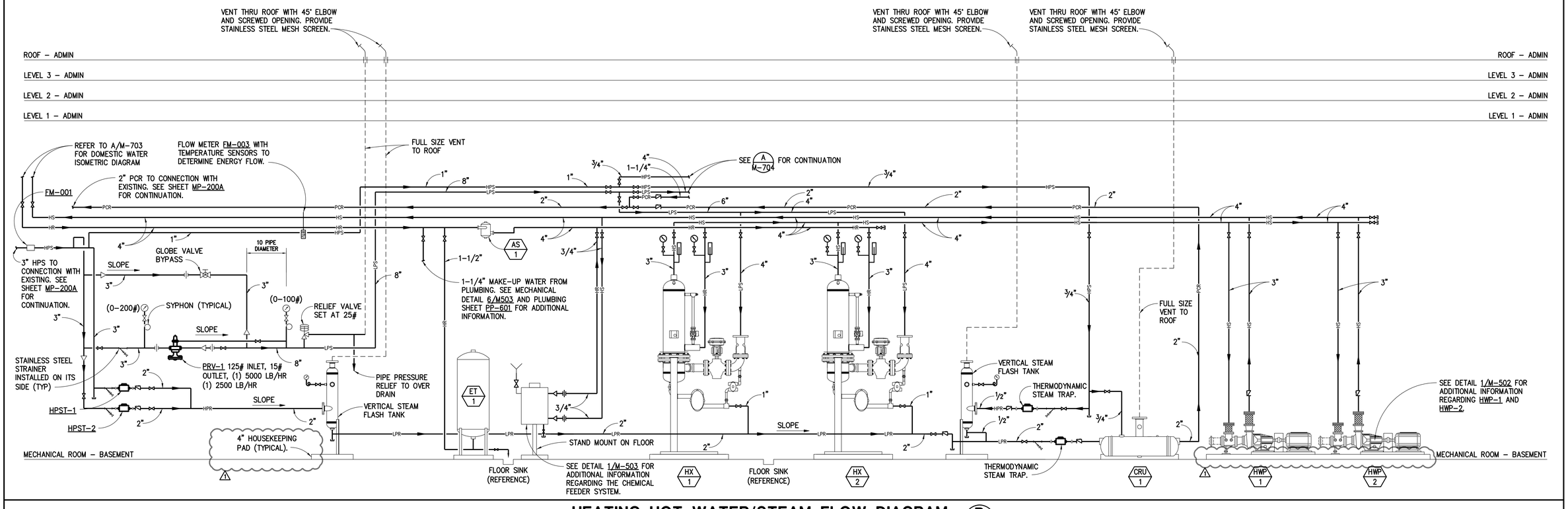

HEATING HOT WATER/STEAM FLOW DIAGRAM (B / M-704)

NO SCALE

CONSTRUCTION DOCUMENTS
BUILDING IS FULLY SPRINKLERED

1	ADDENDUM 1	08/15/12

Revisions: Date:

CONSULTANTS:

CIVIL:	SLATER HANIFAN GROUP, 5740 S. ARVILLE ST. #216, LAS VEGAS, NV 89118
LANDSCAPE:	J W ZUNINO LANDSCAPE ARCHITECTURE, 3191 S. JONES BLVD., LAS VEGAS, NV 89146
MEP:	JBA CONSULTING ENGINEERING, 5155 WEST PATRICK LANE, LAS VEGAS, NV 89118
STRUCTURAL:	DEGENKOLB ENGINEERING, 235 MONTGOMERY STREET, SUITE 500, SAN FRANSISCO CA 94104
GEOTECHNICAL:	NINYO AND MOORE, 6700 PARADISE ROAD, SUITE E, LAS VEGAS, NV 89119
FIRE & LIFE SAFETY:	LASALLE ENGINEERING, 1000 YORK ROAD, WILLOW GROVE, PA 19090

KEY PLAN

ARCHITECT/ENGINEERS:

RTKL
JMA ARCHITECTURE STUDIOS
A Joint Venture

Drawing Title: PIPING SCHEMATIC
Scale: N.T.S.
Approved: Project Director: Milan Hrabina

Project Title: VA Medical Center - PHASE V, Administration Bldg. & Education Ctr. Addition
Location: North Las Vegas, NV
Date: June 15, 2012 | Checked: RCE | Drawn: EJP

Project Number: 593CA2202
Building Number: 6
Drawing Number: M-704
306 of 512

10.0264

Office of Construction and Facilities Management
Department of Veterans Affairs

VA FORM 08-6231

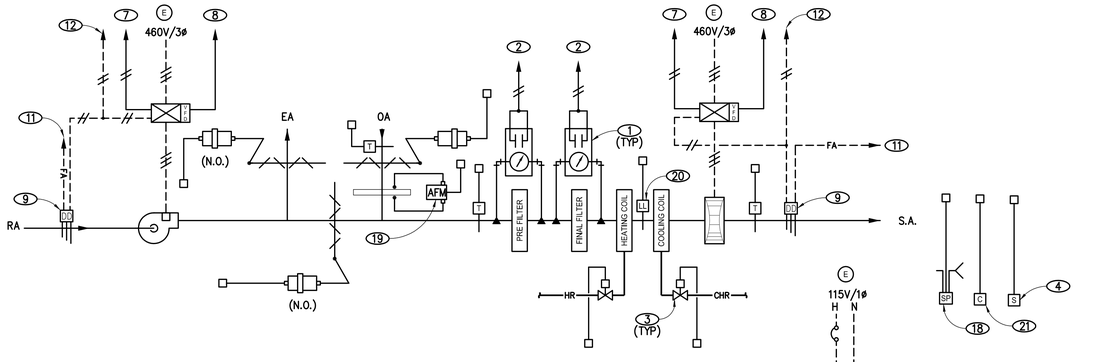

VAV AIR HANDLING UNIT

AHU 1 | AHU 2 | AHU 3 | AHU 4 | AHU 5 | AHU 6 | AHU 7 | AHU 8

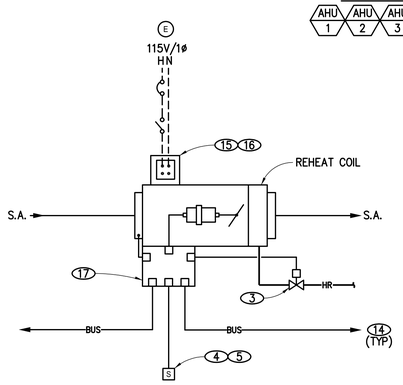

TYP VAV REHEAT TERMINAL

(PRESSURE INDEPENDENT)

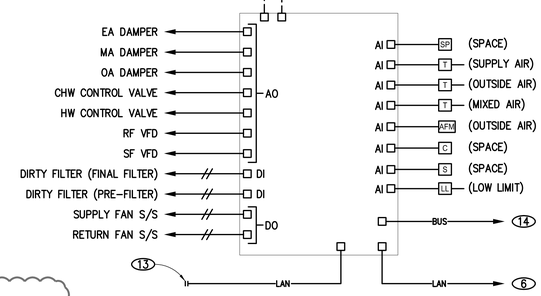

VAV AIR HANDLING UNIT

AHU 1 | AHU 2 | AHU 3 | AHU 4 | AHU 5 | AHU 6 | AHU 7 | AHU 8

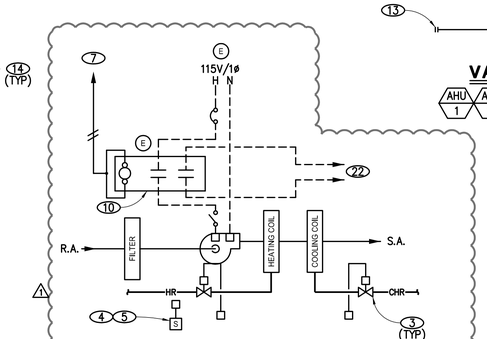

COOLING/HEATING FAN COIL UNIT

FC P-7

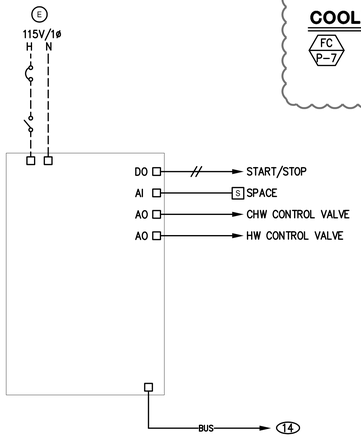

COOLING/HEATING FAN COIL UNIT

FC 1-1 | FC 1-2 | FC 1-5 | FC 1-6 | FC P-1 | FC P-2 | FC P-3 | FC P-4 | FC P-5 | FC P-6 | FC P-7

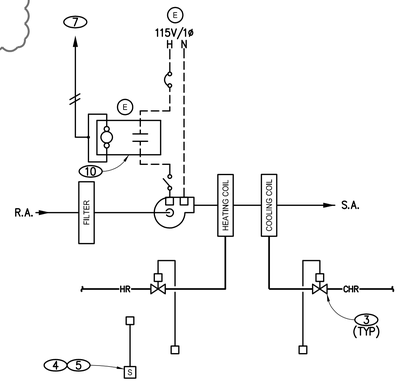

COOLING/HEATING FAN COIL UNIT

FC 1-1 | FC 1-2 | FC 1-5 | FC 1-6 | FC P-1 | FC P-2 | FC P-3 | FC P-4 | FC P-5 | FC P-6

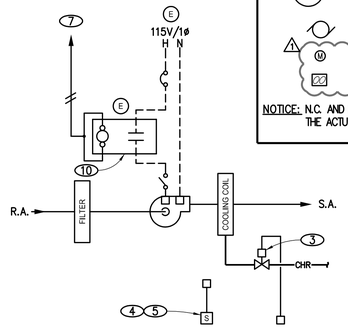

COOLING ONLY FAN COIL UNIT

FC 1-3 | FC 1-4 | FC 2-1 | FC 3-1

AUTO TEMP. CONTROL / EMCS LEGEND

S	SPACE SENSOR W/ PLUG-IN PORT AND LOCAL SETPOINT ADJUSTMENT
E	ITEM OR DEVICE PROVIDED BY DIVISION 26
O.L.	CIRCUIT BREAKER (E)
	OVERLOAD PROTECTION (E)
	CONDUIT AND POWER WIRING PROVIDED BY DIVISION 26 (NO. OF HASH MARKS INDICATE QUANTITY OF WIRES). (E)
	DISCONNECT SWITCH (E)
	CONDUIT AND LOW VOLTAGE (SIGNAL) WIRING PROVIDED BY MECHANICAL CONTRACTOR (ATC/EMCS SECTION) (NO. OF HASH MARKS INDICATES WIRE QUANTITY).
	VARIABLE FREQUENCY DRIVE, FURN. BY MECHANICAL, INSTALLED & WIRED BY ELECTRICAL.
	MAGNETIC STARTER W/PILOT LIGHT & HOA SWITCH (E)
	ELECTRIC/ ELECTRICAL TERMINAL
BUS	DDC COMMUNICATIONS TRUNK (CONDUIT & WIRE PROVIDED BY DIVISION 23, ATC/ EMCS SECTION).
T	TEMPERATURE SENSOR/TRANSMITTER
SP	STATIC PRESSURE TRANSMITTER
	ELECTRIC/ ELECTRONIC THREE-WAY VALVE
	ELECTRIC/ ELECTRONIC TWO WAY VALVE (50 PSIG SHUT-OFF)
ATC	AUTOMATIC TEMPERATURE CONTROLS
DDC	DIRECT DIGITAL CONTROL
EMCS	ENERGY MANAGEMENT AND CONTROL SYSTEM
N.O.	NORMALLY OPEN
N.C.	NORMALLY CLOSED
XFMR	TRANSFORMER
H-O-A	HAND-OFF-AUTO SWITCH
S/S	START/ STOP (ENABLE/DISABLE) SIGNAL VIA EMCS
FA	CONDUIT AND WIRE PROVIDED BY ELECTRICAL (FIRE ALARM SECTION)
DD	DUCT MOUNTED PHOTOELECTRIC TYPE ADDRESSABLE SMOKE DETECTOR (FURN., WIRED AND TESTED BY DIVISION 26, INSTALLED BY DIVISION 23).
DO	DIGITAL OUTPUT
DI	DIGITAL INPUT
AO	ANALOG OUTPUT
AI	ANALOG INPUT
LAN	HIGH SPEED ETHERNET LAN (LOCAL AREA NETWORK)
AFM	AIRFLOW MONITORING STATION
	RELAY (E)
	PLENUM FAN
	AIRFOIL/SCROLL FAN
	FAN/PUMP
1 M	ELECTRICAL METER
1	U.L. LISTED CURRENT STATUS SWITCH (PROVIDED BY DIVISION 26)

NOTICE: N.C. AND N.O. INDICATES THE FAILED POSITION FOR VALVES AND DAMPERS. UPON POWER FAILURE, THE ACTUATOR SHALL SPRING RETURN TO THE INDICATED "NORMAL" POSITION.

AUTO TEMP. CONTROL / EMCS NOTES

1. MAGNEHELIC FILTER GAUGE WITH DIFFERENTIAL PRESSURE TRANSMITTER FOR EMCS INTERFACE (DIRTY FILTER ALARM) FURNISH WITH 0–1" W.C. RANGE FOR PRE FILTERS AND 0–2" W.C. RANGE FOR FINAL FILTERS, TUBING, PITOT TUBES, RED FLAG INDICATOR.
2. EMCS INTERFACE (DIRTY FILTER ALARM).
3. 2-WAY CONTROL VALVE. SELECT FOR MAXIMUM 5 PSIG WPD AT SCHEDULE FLOW & 50 PSIG (DIFFERENTIAL PRESSURE) SHUT-OFF. CHILLED AND HEATING WATER VALVES SHALL FAIL OPEN UPON LOSS OF POWER. (NORMALLY OPEN).
4. SPACE SENSOR WITH LOCAL OVERRIDE CAPABILITY FOR SPACE TEMPERATURE HAVING PLUG-IN PORT FOR PORTABLE COMPUTER SIMILAR TO EXISTING. PROVIDE CAPABILITY FOR READING CFM VIA PORTABLE COMPUTER PORT.
5. SEE FLOOR PLANS FOR LOCATIONS. COORDINATE EXACT LOCATION IN FIELD WITH GENERAL CONTRACTOR AND ARCHITECT.
6. HIGH SPEED ETHERNET LAN TO/FROM OTHER PANELS.
7. START/STOP (ENABLE/DISABLE) SIGNAL VIA EMCS.
8. VFD INPUT SIGNAL VIA EMCS.
9. DUCT MOUNTED ADDRESSABLE SMOKE DETECTOR TO DEENERGIZE FAN AND ANNUNCIATE AT FIRE ALARM SYSTEM.
10. ENABLE/DISABLE RELAY FOR EMCS INTERFACE. COORDINATE EXACT REQUIREMENTS FOR EMCS INTERFACE WITH ATC/EMCS SECTION PRIOR TO BEGINNING WORK.
11. FIRE ALARM INTERFACE.
12. SUPPLY/RETURN DUCT MOUNTED SMOKE DETECTOR INTERFACE.
13. P.O.C. TO EXISTING COMMUNICATIONS TRUNK. VERIFY EXACT LOCATION IN FIELD PRIOR TO BEGINNING WORK.
14. COMMUNICATIONS BUS TO/FROM OTHER CONTROLLERS/DDC PANEL.
15. 115V/24V CONTROL TRANSFORMER.
16. FURNISH TRANSFORMER W/ VAV TERMINAL, MTD. WITHIN CABINET SECTION PROVIDED W/ VAV TERMINAL.
17. VAV CONTROLLER.
18. ROOM STATIC PRESSURE SENSOR FOR WALL MOUNTING, OUTPUT COMPATIBLE WITH EMCS.
19. AIRFLOW MONITORING STATION WITH EMCS INTERFACE AND LOCAL VISUAL CFM INDICATOR. OUTSIDE AIR QUANTITIES SHALL BE CONTINUOUSLY MONITORED THROUGH THE BUILDING MANAGEMENT SYSTEM FOR EACH AIR HANDLING UNIT AND THE AIRFLOW MEASUREMENT STATION SHALL GENERATE AN ALARM AT THE HEADEND WHEN OUTDOOR AIRFLOW RATES VARY FROM SETPOINT BY MORE THAN 10%. INSTALL STATION PER MANUFACTURERS RECOMMENDATIONS.
20. LOW LIMIT TEMPERATURE TRANSMITTER TO DEENERGIZE FANS AND CLOSE OA DAMPER IF TEMPERATURE FALLS BELOW 40°F (FIELD PROGRAMMABLE).
21. CO2 SENSORS SHALL BE LOCATED IN EACH SPACE SERVED BY THE RESPECTIVE AIR HANDLING UNIT. THE SENSOR SHALL BE LOCATED IN THE BREATHING ZONE (+3'–0" TO +6'–0" ABOVE THE FLOOR). SENSOR LAYOUT AND QUANTITY FOR EACH SPACE SHALL BE BY THE EMCS CONTRACTOR BASED ON SENSOR MANUFACTURER USED. SENSORS SHALL BE INSTALLED FOR FULL COVERAGE DETECTION WITHIN THE AREA DEFINED IN THE PRODUCT LISTING OF THE SENSOR. CONCENTRATION ABOVE= 1000 PPM (ADJUSTABLE) WILL BE THE ESTABLISHED SET POINT FOR GENERATING AN ALARM. DATA SHALL BE ACCUMULATED, LOGGED, AND SUMMARIZED ON AN HOURLY BASIS BY THE EMCS WITH THE ABILITY TO STORE A MINIMUM OF ONE (1) YEARS STORAGE.
22. DEENERGIZE FAN UPON ACTIVATION OF SMOKE DETECTOR WITHIN THE ELEVATOR MACHINE ROOM OR HOISTWAY. COORDINATE WITH FIRE ALARM CONTRACTOR FOR ADDITIONAL INFORMATION.

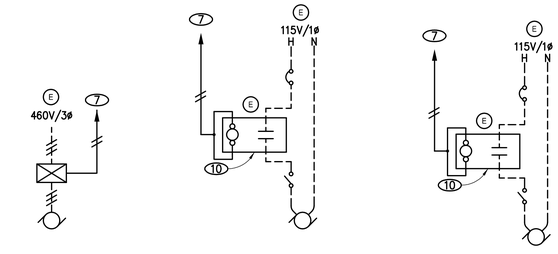

EXHAUST FAN

EF 2 | EF 3

EXHAUST FAN

EF 1

SUPPLY FAN

SF 1 | SF 2

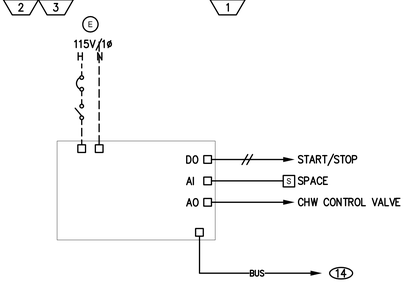

COOLING ONLY FAN COIL UNIT

FC 1-3 | FC 1-4 | FC 2-1 | FC 3-1

CONSTRUCTION DOCUMENTS
BUILDING IS FULLY SPRINKLERED

Revisions:	Date:
1 ADDENDUM 1	08/15/12

CONSULTANTS:

CIVIL: SLATER HANIFAN GROUP, 5740 S. ARVILLE ST. #216, LAS VEGAS, NV 89118
LANDSCAPE: J W ZUNINO LANDSCAPE ARCHITECTURE, 3191 S. JONES BLVD., LAS VEGAS, NV 89146
MEP: JBA CONSULTING ENGINEERING, 5155 WEST PATRICK LANE, LAS VEGAS, NV 89118
STRUCTURAL: DEGENKOLB ENGINEERING, 235 MONTGOMERY STREET, SUITE 500, SAN FRANSISCO CA 94104
GEOTECHNICAL: NINYO AND MOORE, 6700 PARADISE ROAD, SUITE E, LAS VEGAS, NV 89119
FIRE & LIFE SAFETY: LASALLE ENGINEERING, 1000 YORK ROAD, WILLOW GROVE, PA 19090

KEY PLAN

ARCHITECT/ENGINEERS:

RTKL
JMA ARCHITECTURE STUDIOS
A Joint Venture

N TRUE

Drawing Title: MECHANICAL - CONTROL DIAGRAMS
Scale: N.T.S.
Approved: Project Director: Milan Trickic
Project Title: VA Medical Center - PHASE V, Administration Bldg. & Education Ctr. Addition
Location: North Las Vegas, NV
Date: June 15, 2012 | Checked: RCE | Drawn: EJP
Project Number: 593CA2202
Building Number: 6
Drawing Number: M-901
320 of 512
10.0264

Office of Construction and Facilities Management
Department of Veterans Affairs

VA FORM 08-6231

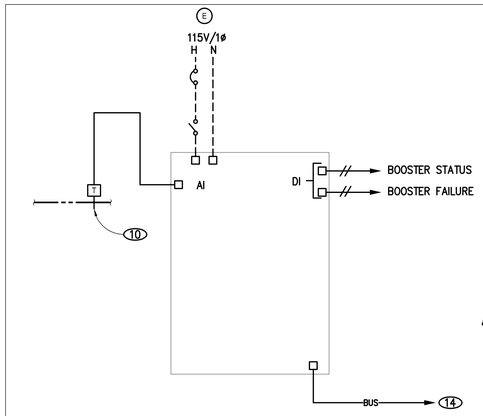

TYPICAL DOMESTIC BOOSTER SYSTEM AND HOT WATER TEMP. MONITORING

WH 1 / WH 2

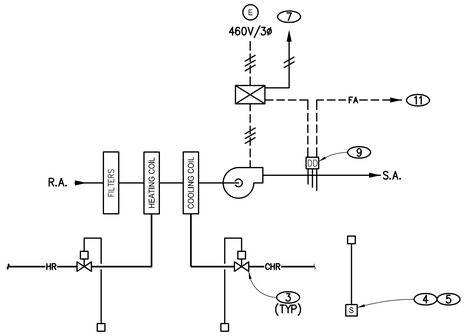

BELT DRIVE HEATING/COOLING FAN COIL UNIT

FC B-4

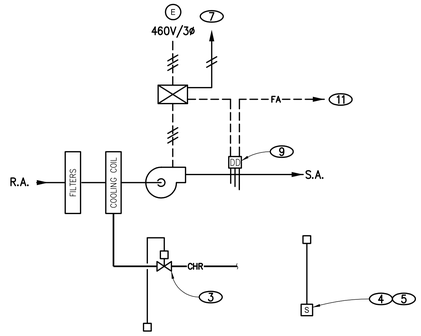

BELT DRIVE COOLING ONLY FAN COIL UNIT

FC B-1 / FC B-2 / FC B-3

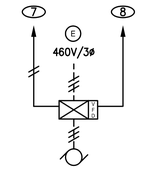

CHILLED WATER PUMP

CHWP 1 / CHWP 2

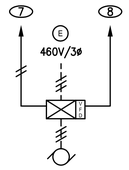

HEATING WATER PUMP

HWP 1 / HWP 2

AUTO TEMP. CONTROL / EMCS NOTES

1. FIRE ALARM CONTROL MODULE.
2. COORDINATE COMMUNICATIONS INTERFACE REQUIREMENTS WITH ELECTRICAL (DIVISION 26) PRIOR TO BEGINNING WORK.
3. 2-WAY CONTROL VALVE. SELECT FOR MAXIMUM 5 PSIG WPD AT SCHEDULE FLOW & 50 PSIG (DIFFERENTIAL PRESSURE) SHUT-OFF. CHILLED AND HEATING WATER VALVES SHALL FAIL OPEN UPON LOSS OF POWER. (NORMALLY OPEN).
4. SPACE SENSOR HAVING PLUG-IN PORT FOR PORTABLE COMPUTER. PROVIDE CAPABILITY FOR READING CFM VIA PORTABLE COMPUTER PORT.
5. SEE FLOOR PLANS FOR LOCATIONS. COORDINATE EXACT LOCATION IN FIELD WITH GENERAL CONTRACTOR AND ARCHITECT.
6. HIGH SPEED ETHERNET LAN TO/FROM OTHER PANELS.
7. START/STOP (ENABLE/DISABLE) SIGNAL VIA EMCS.
8. VFD INPUT SIGNAL VIA EMCS.
9. DUCT MTD. ADDRESSABLE SMOKE DETECTOR TO DEENERGIZE FAN AND ANNUNCIATE AT FIRE ALARM SYSTEM.
10. TEMP. TRANSMITTER IN DOMESTIC HOT WATER SYSTEM (COORDINATE QUANTITY AND LOCATION WITH PLUMBING SECTION).
11. FIRE ALARM INTERFACE.
12. COORDINATE WITH DIVISION 1 REQUIREMENTS FOR COMPLIANCE WITH LEED-NC V3.0.
13. P.O.C. TO EXISTING COMMUNICATIONS TRUNK. VERIFY EXACT LOCATION IN FIELD PRIOR TO BEGINNING WORK.
14. COMMUNICATIONS BUS TO/FROM OTHER CONTROLLERS/DDC PANEL.
15. UNITARY CONTROLLER.
16. INTERFACE WITH UNIT TERMINAL STRIP AS REQUIRED.
17. CONDENSATE OVERFLOW SENSOR INTERFACE. UNIT WILL BE DEENERGIZED AND ALARM TRANSMITTED TO EMCS UPON SENSING IMPENDING OVERFLOW.
18. COORDINATE WITH FIRE ALARM CONTRACTOR AND FIRE PROTECTION CONSULTANT FOR SPECIFIC WIRING AND CONNECTION.
19. DIFFERENTIAL PRESSURE SIGNAL TO EMCS.
20. FIRE ALARM MONITOR MODULE.
21. FIRE ALARM ADDRESSABLE SIGNALLING LINE CIRCUIT.
22. OCCURS AT CHILLED AND HOT WATER SYSTEMS.
23. BOOSTER SYSTEM STATUS TO EMCS.
24. BOOSTER SYSTEM FAILURE SIGNAL TO EMCS.
25. COORDINATE EXACT REQUIREMENTS WITH PLUMBING SECTION AND BOOSTER SYSTEM MANUFACTURERS APPROVED WIRING DIAGRAMS.
26. REFER TO ELECTRICAL FLOOR PLANS FOR LIGHTING CONTROL PANEL AND DIMMER CONTROL PANEL LOCATIONS.
27. COORDINATE WITH DIVISION 1 REQUIREMENTS FOR COMPLIANCE WITH LEED V3.0, IEQ C6.1, CONTROLLABILITY OF SYSTEMS – LIGHTING.
28. CURRENT STATUS SWITCH FROM ELECTRICAL HA1A, HB1A, HA2A, HA3A, LB1B, EH1A, AND EH2A, COORDINATE WITH ELECTRICAL CONTRACTOR FOR EXACT LOCATION.

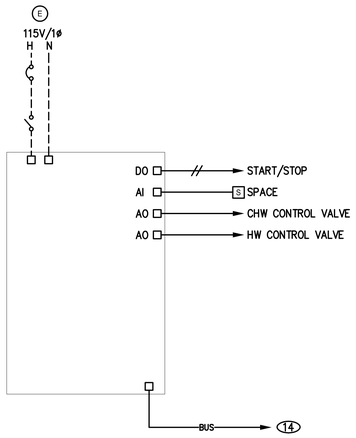

BELT DRIVE HEATING/COOLING FAN COIL UNIT

FC B-4

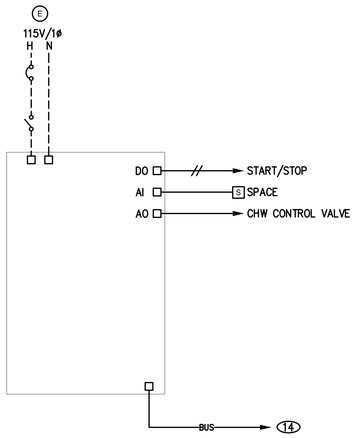

BELT DRIVE COOLING ONLY FAN COIL UNIT

FC B-1 / FC B-2 / FC B-3

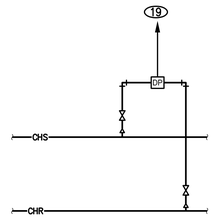

CHILLED WATER SYSTEM DIFFERENTIAL PRESSURE CONTROL

(TYP. FOR HOT WATER)

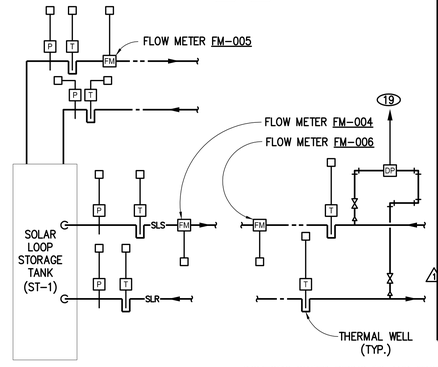

DOMESTIC WATER PIPING TO AND FROM WATER HEATERS WH-1 AND WH-2 SEE PLUMBING SHEET PP-601 FOR ADDITIONAL INFORMATION.

SOLAR LOOP ENERGY MONITORING ENERGY MONITORING

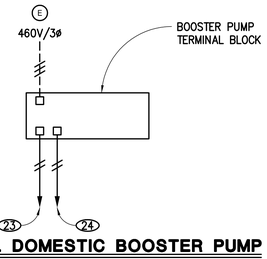

TYPICAL DOMESTIC BOOSTER PUMP

BP 1 / 25

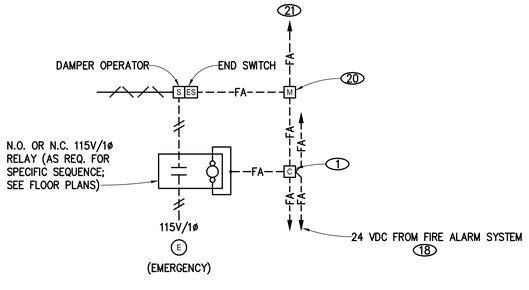

TYP. SMOKE DAMPER CONTROL VIA FIRE ALARM

(NOTE: FAILED POSITION IS THE DAMPER POSITION FOR THE SMOKE MODE.)

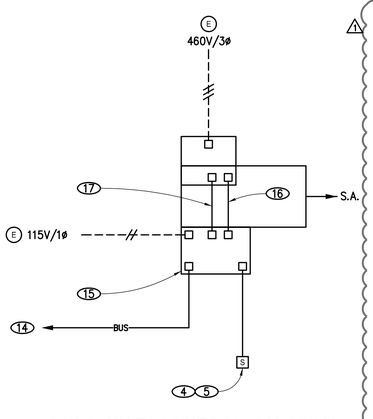

CRAC UNIT CONTROL DIAGRAM

CRAC 1-1 / CRAC 1-2 / CRAC 2-1 / CRAC 3-1

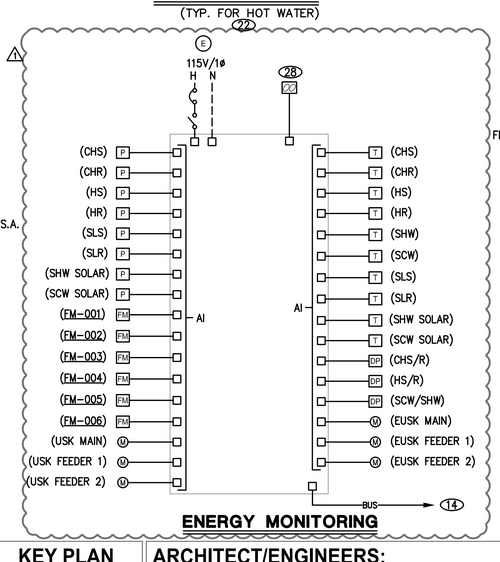

ENERGY MONITORING

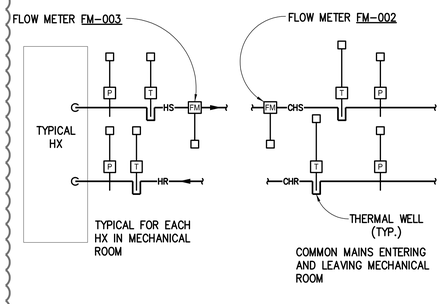

CHILLED AND HEATING WATER ENERGY MONITORING

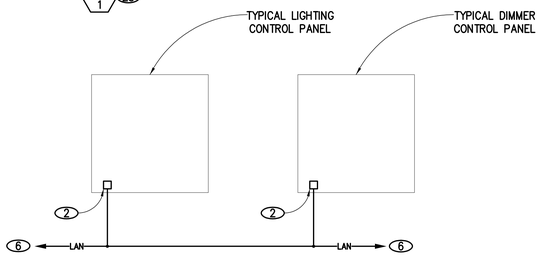

TYP. LIGHTING CONTROL/EMCS INTERFACE

26 27

CONSTRUCTION DOCUMENTS
BUILDING IS FULLY SPRINKLERED

Revisions:	Date:
1 ADDENDUM 1	08/15/12

CONSULTANTS:

CIVIL: SLATER HANIFAN GROUP, 5740 S. ARVILLE ST. #216, LAS VEGAS, NV 89118
LANDSCAPE: J W ZUNINO LANDSCAPE ARCHITECTURE, 3191 S. JONES BLVD., LAS VEGAS, NV 89146
MEP: JBA CONSULTING ENGINEERING, 5155 WEST PATRICK LANE, LAS VEGAS, NV 89118
STRUCTURAL: DEGENKOLB ENGINEERING, 235 MONTGOMERY STREET, SUITE 500, SAN FRANSISCO CA 94104
GEOTECHNICAL: NINYO AND MOORE, 6700 PARADISE ROAD, SUITE E, LAS VEGAS, NV 89119
FIRE & LIFE SAFETY: LASALLE ENGINEERING, 1000 YORK ROAD, WILLOW GROVE, PA 19090

KEY PLAN

ARCHITECT/ENGINEERS:

RTKL
JMA ARCHITECTURE STUDIOS
A Joint Venture

Drawing Title: MECHANICAL - CONTROL DIAGRAMS
Scale: N.T.S.
Approved: Project Director: Milan Arsikin
Project Title: VA Medical Center - PHASE V, Administration Bldg. & Education Ctr. Addition
Location: North Las Vegas, NV
Date: June 15, 2012
Checked: RCE
Drawn: EJP
Project Number: 593CA2202
Building Number: 6
Drawing Number: M-902
321 of 512
10.0264

Office of Construction and Facilities Management
Department of Veterans Affairs

VA FORM 08-6231