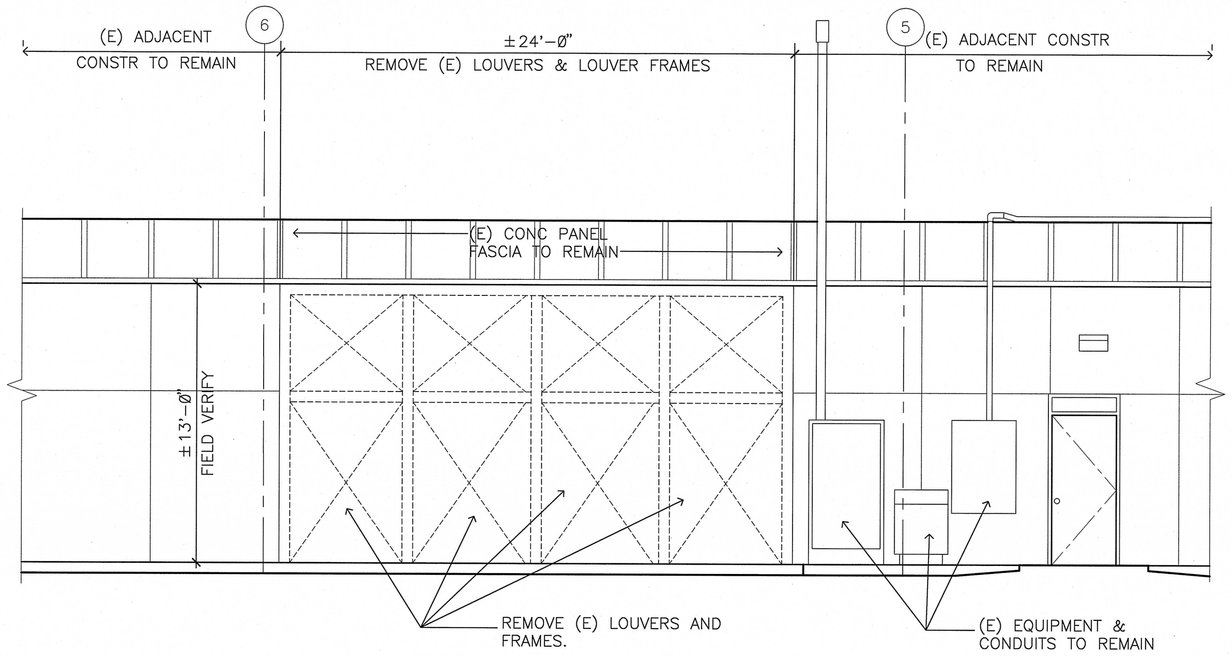

1 A5.1 A5.2 NORTH ELEVATION DEMOLITION

SCALE: 1/4" = 1'-0"

SCALE: 3/4"=1'-0"

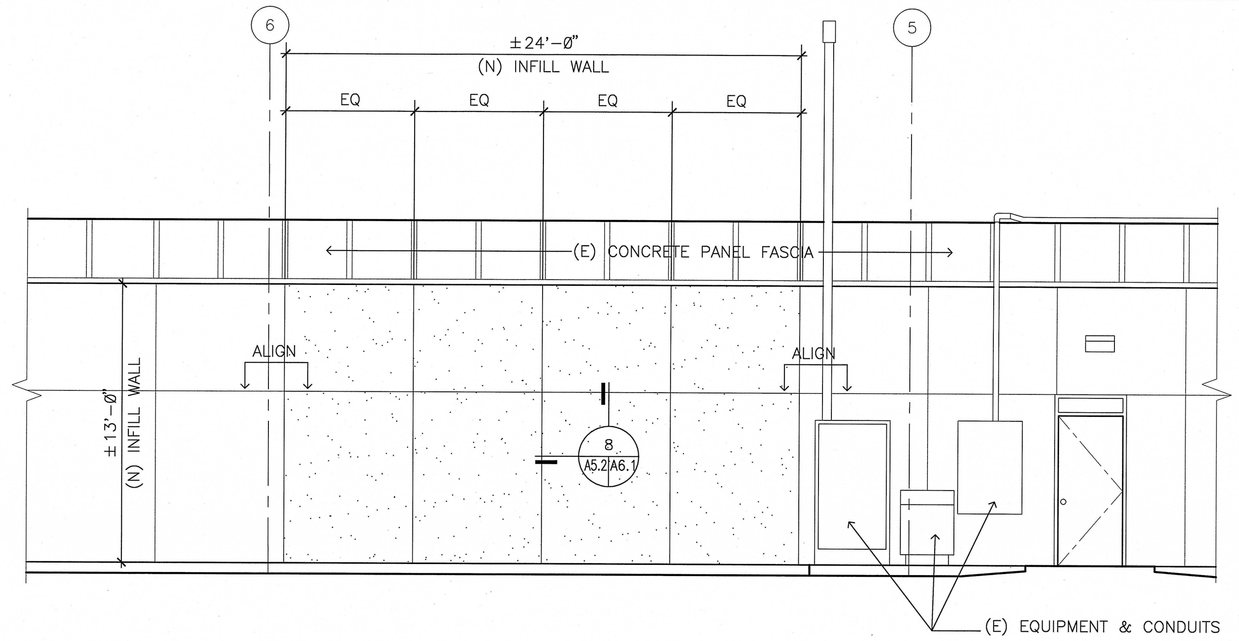

2 A5.1 A5.2 NEW NORTH ELEVATION

SCALE: 1/4" = 1'-0"

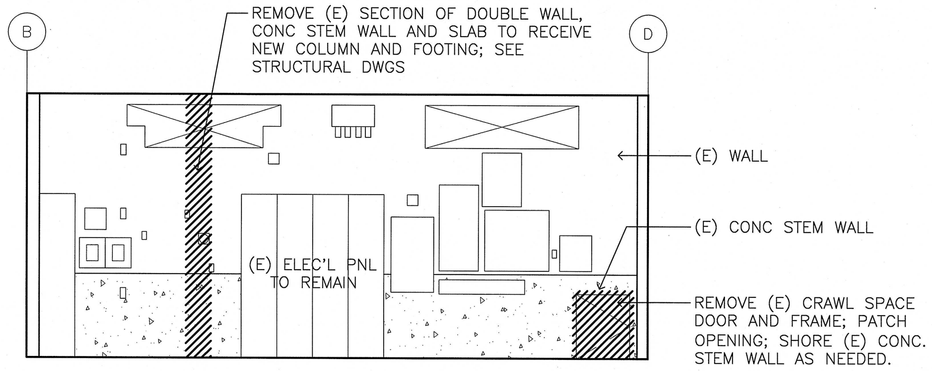

3 A5.1 A5.2 (E) EAST WALL @ MECH RM 1D645

SCALE: 1/4" = 1'-0"

SCALE: 1/2"=1'-0"

NOTE:

1. REFER TO STRUCTURAL, ELECTRICAL AND MECHANICAL PLANS FOR MORE DEMOLITION PLANS AND NOTES.
2. COORDINATE W/ COTR ON RELOCATION OF FIRE ALARM DEVICES AND CONDUITS.

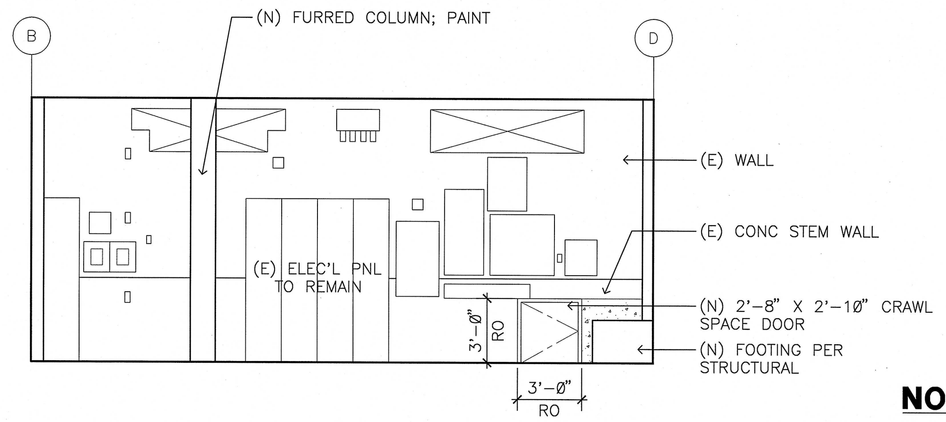

4 A5.1 A5.2 (N) EAST WALL @ MECH RM 1D645

SCALE: 1/4" = 1'-0"

NOTE:

1. REFER TO STRUCTURAL, ELECTRICAL AND MECHANICAL PLANS FOR MORE INFORMATION.
2. COORDINATE W/ COTR ON RELOCATION OF FIRE ALARM DEVICES AND CONDUITS.

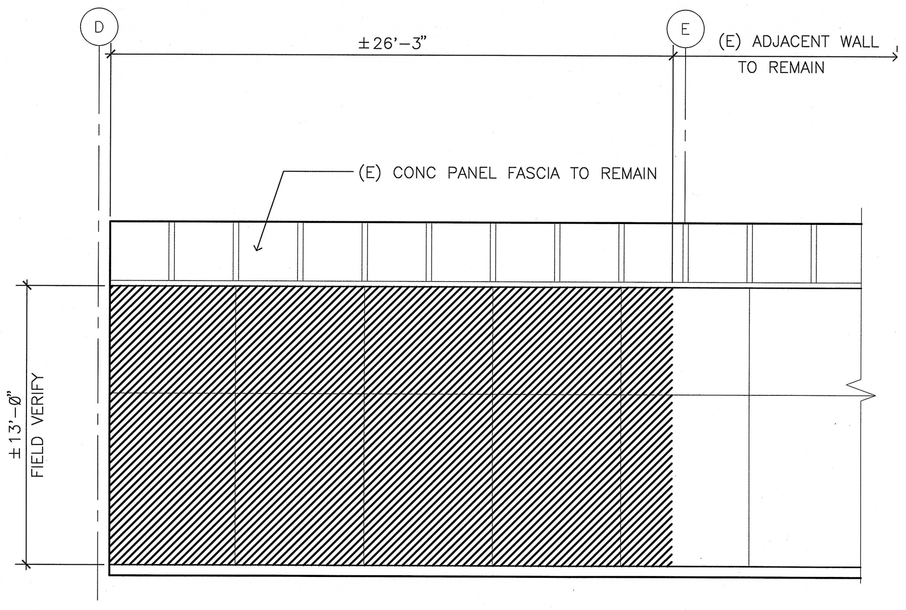

5 A5.1 A5.2 (E) EAST WALL @ COURTYARD

SCALE: 1/4" = 1'-0"

SCALE: 1/4"=1'-0"

NOTE:

1. REFER TO STRUCTURAL PLANS FOR MORE DEMOLITION PLANS AND NOTES.

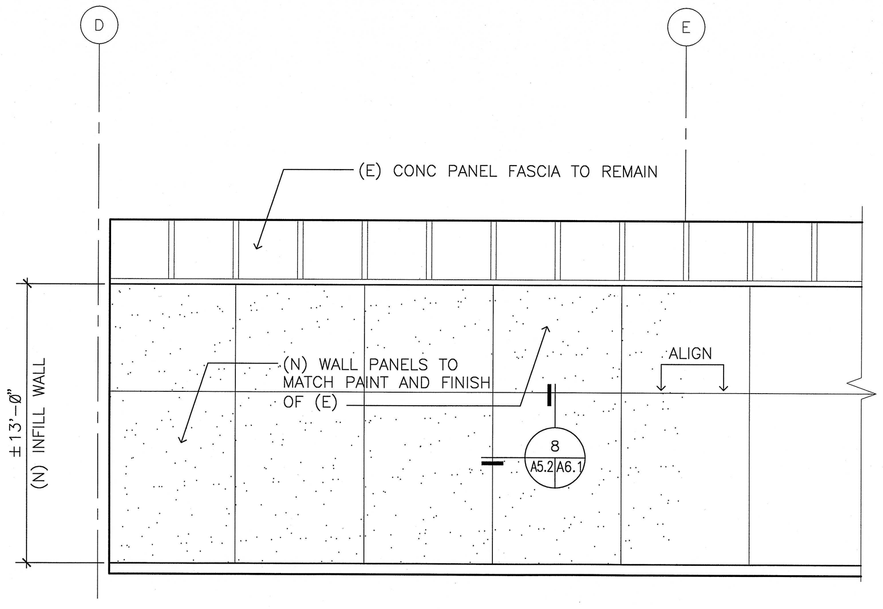

6 A5.1 A5.2 (N) EAST WALL @ COURTYARD

SCALE: 1/4" = 1'-0"

NOTE:

1. SEE WALL SECTION: 1 A5.1 A6.1

SCALE: 1/8"=1'-0"

LICENSED ARCHITECT JORGE E. ALFARO C-22051 REN. 03/09 STATE OF CALIFORNIA

K.F. DAVIS ENGINEERING, INC
530 LA GONDA WAY, SUITE E
DANVILLE, CA 94526

Revisions:	Drawing Title: BUILDING AND INTERIOR ELEVATIONS		Project Title: BLDG 650 REPLACE AIR HANDLERS 1 THRU 4, 7 AND 9 – 15	Date: 08/25/08
				Project No.: 612A4-07-342
Approved:	Approved: Medical Center Director	Drawn: VMAN	Building Number:	DRAWING No. A5.2
Approved:	Approved: Chief, Engineering Service	Checked: JA	Location: MATHER VAMC MATHER CALIFORNIA	Dwg. Of

Department of Veterans Affairs

061708