GENERAL NOTES:

1. COORDINATE STRUCTURAL WORK FOR (N) AHU WITH S-DWGS.
2. SEAL (E) DUCTWORK AIR TIGHT.
3. PATCH WALLS, FLOORS, ROOF TO MATCH EXISTING.
4. SEE H1.1 FOR PHASING NOTES

SHEET NOTES:

1. CONN. TO (E) CHWS & R PIPING, PROVIDE CIRCULATING PUMP P-2, SEE DETAIL ON H6.1.
2. CONN. TO (E) HHWS & R PIPING, PROVIDE CIRCULATING PUMP P-1, SEE DETAIL ON H6.1.
3. PROVIDE BACKDRAFT DAMPERS & WEATHER CAP; SEAL ROOF OPENING WATER TIGHT; COORDINATE (N) ROOF PENETRATIONS WITH STRUCTURAL.
4. MOUNT UNIT ON (N) 6" HIGH CONCRETE HOUSE KEEPING PAD WITH SEISMICALLY RESTRAINED SPRING VIBRATION ISOLATORS; MAINTAIN MFR RECOMMENDED SERVICE ACCESS CLEARANCES.
5. SUSPEND FAN FROM (E) STRUCTURE WITH THREADED ROD AND SEISMICALLY RESTRAINED SPRING VIBRATION ISOLATORS.
6. CONN. TO AHU-14 SIMILAR TO AHU-10 (SEE WEST PENTHOUSE PLAN)
7. EXTEND 2" HHWS & R UP FROM (E) HHWS & R PIPING IN 3RD FLOOR CEILING, AND OVER TO AIR HANDLER.
8. EXTEND CONDENSATE DRAIN FULL SIZE FROM UNIT TO OVER (E) FLOOR DRAIN.
9. EXTERNALLY INSULATE S.A. DUCTWORK IN MECHANICAL ROOM.
10. INSTALL DUCTWORK HIGH OVER AHU & CONN. TO (E) DUCTWORK.
11. OUTSIDE AIR ECONOMIZER.
12. RELIEF AIR DUCTED THRU WALL, PROVIDE BACKDRAFT DAMPER, BIRDSCREEN & WEATHER HOOD.
13. PROVIDE DUCT MOUNTED SMOKE DETECTOR. MAKE & MODEL TO MATCH (E) FIRE ALARM DERVICES. CONTRACTOR TO PROVIDE CONTROL POWER AS NECESSARY.
14. COORDINATE DUCT PENETRATION THRU FLOOR WITH STRUCTURAL.

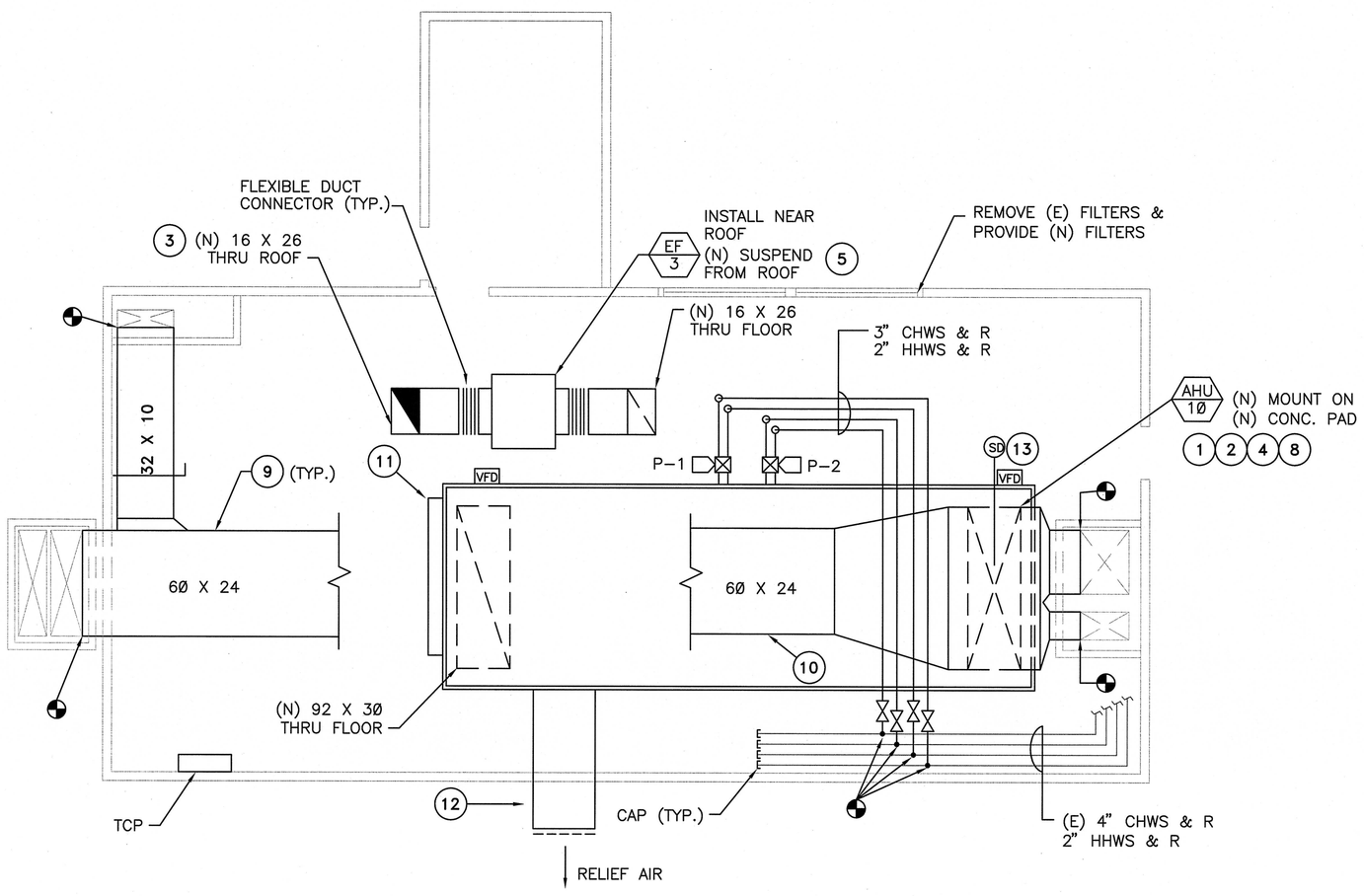

ROOF MECH PLAN PENTHOUSE (WEST)
SCALE: 1/4" = 1'-0"
NORTH

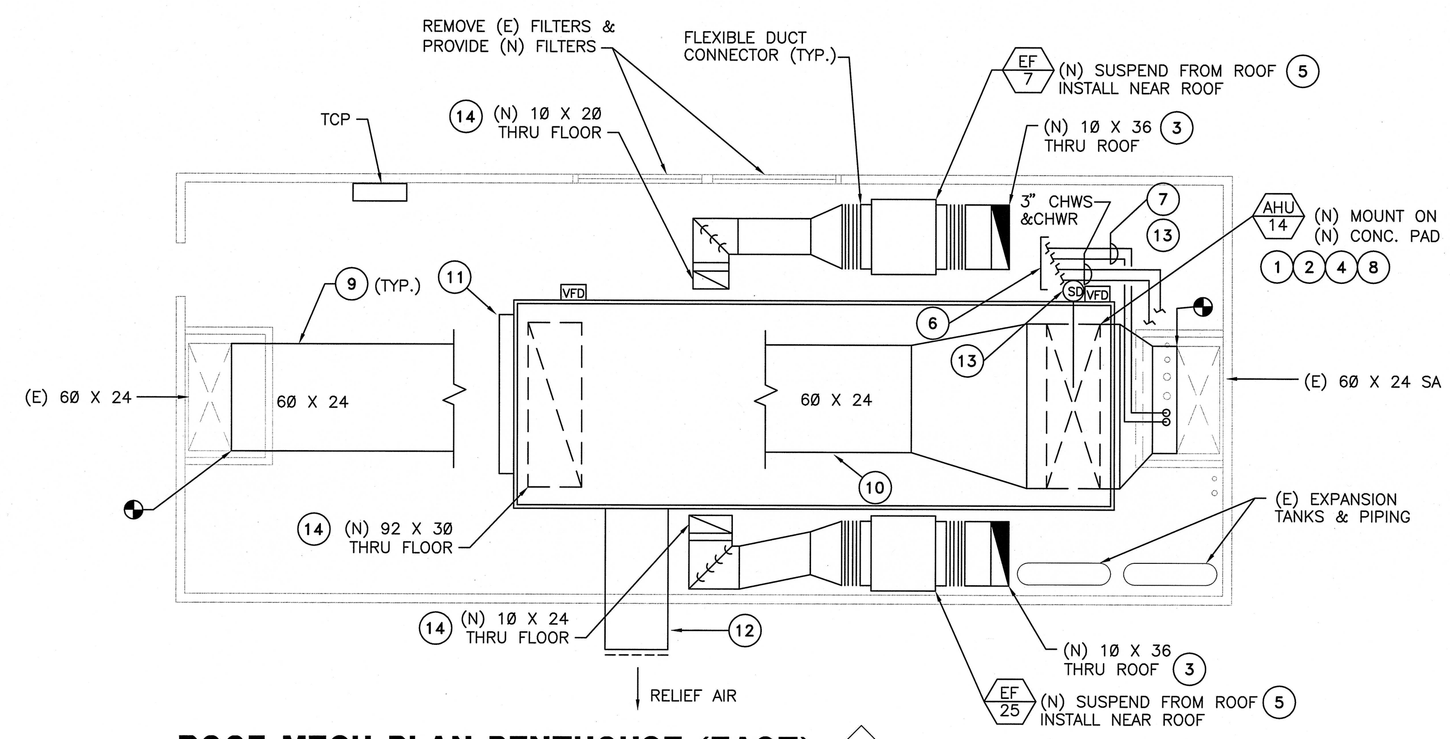

ROOF MECH PLAN PENTHOUSE (EAST)
SCALE: 1/4" = 1'-0"
NORTH

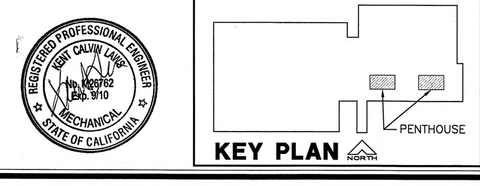

KEY PLAN
NORTH

K.F. DAVIS ENGINEERING, INC
530 LA GONDA WAY, SUITE E
DANVILLE, CA 94526

Revisions:	Drawing Title: MECHANICAL PLAN PENTHOUSE	Project Title: BLDG 650 REPLACE AIR HANDLERS 1 THRU 4, 7 AND 9 - 15	Date: 08/25/08
Approved:	Approved: Medical Center Director	Drawn: RMK	Project No.: 612A4-07-342
Approved:	Approved: Chief, Engineering Service	Checked: KL	Building Number:
		Location: MATHER VAMC MATHER CALIFORNIA	DRAWING No. H3.6 Dwg. Of

Department of Veterans Affairs

SCALE: 3/4"=1'-0"
SCALE: 1/2"=1'-0"
SCALE: 1/4"=1'-0"
SCALE: 1/8"=1'-0"
011108