SEQUENCE OF OPERATION:

A. GENERAL UNIT OPERATION
1. VFD POWERED FANS
   a. VARIABLE FREQUENCY DRIVES (VFD) SHALL START AT THE MINIMUM SPEED SETTING AND SHALL RAMP TO THE CONTROL POINT. UNLESS OTHERWISE NOTED, THE VFD SHALL RAMP UP AND DOWN FULL SCALE OVER 180 (FA) SECONDS. THE VFD SHALL NOT BE ALLOWED TO OPERATE AT LESS THAN 15 HZ. IF AN ELECTRICAL DISCONNECT IS CONNECTED BETWEEN THE VFD AND THE EQUIPMENT, THE VFD SHALL NOT BE ALLOWED TO OPERATE IF THE DISCONNECT IS OPEN.
   b. SEE SPECIFICATION SECTIONS 15764 AND 15902 FOR ADDITIONAL VFD REQUIREMENTS.

B. SUPPLY AIR SYSTEM – CONTROL SEQUENCE
1. AHU-1 IS ROOF TOP AIR HANDLING UNIT. THE UNIT CONSISTS OF AN OUTDOOR AIR INTAKE WITH ECONOMIZER CONTROLS AND A RETURN FAN, MIXED AIR/FILTER SECTION, COOLING COIL SECTION, HOT WATER PRE-HEAT COIL SECTION AND SUPPLY FAN.
   a. THE UNIT SHALL BE PLACED IN THE START-UP MODE BY THE EXISTING ECC.
   b. THE OUTDOOR AIR DAMPER SHALL BE CLOSED.
2. SYSTEM IS DESIGNED AS HEATING-COOLING, SINGLE DUCT, VARIABLE AIR VOLUME REHEAT SYSTEM WHERE REHEAT IS PROVIDED BY EXISTING VAV TERMINAL UNIT HOT WATER REHEAT COILS.
3. SUPPLY AND RETURN FANS ARE INTERLOCKED TOGETHER.
4. SUPPLY AND RETURN FAN START/STOP (AHU-1)
   a. AHU-1 SUPPLY AND RETURN FANS SHALL BE STARTED AND STOPPED THROUGH E.C.C. BY A SINGLE START OR STOP COMMAND INITIATED MANUALLY BY BUILDING OPERATING PERSONNEL. UPON INITIATION OF A START COMMAND, FANS SHALL BE STARTED AUTOMATICALLY IN A SEQUENCE AS SPECIFIED.
   b. SUPPLY FAN SF-1 AND RETURN FAN RF-1 ARE POWERED BY ENGINE GENERATOR SET WHEN THE RTU IS OPERATING IN EMERGENCY MODE.
5. GENERAL:
   a. NEW CONTROLS SHALL INCLUDE ALL COMPONENTS AS NECESSARY TO ACCOMMODATE SEQUENCE OF OPERATION. PROVIDE A TEMPERATURE CONTROL PANEL (TCP). LOCATE THE PANEL IN THE (E) FAN ROOM BELOW THE UNIT. TCP SHALL CONTAIN ALL CONTROLLERS, TRANSFORMERS AND RELAYS. CONTRACTOR SHALL PROVIDE DEVICES AND CONNECTIONS REQUIRED TO PRODUCE INDICATED SEQUENCE OF OPERATION. FURNISH ALL RELAYS, SENSORS, WIRING, TRANSFORMERS, CONTROL LOOPS AND OTHER CONTROL DEVICES NECESSARY TO MEET THE INTENT OF THE SEQUENCE OF OPERATION.
   b. H-O-A SWITCH SHALL BE KEPT IN THE "AUTO" POSITION. "HAND" AND "OFF" POSITIONS SHALL BE USED ONLY FOR MAINTENANCE. WHEN THE UNIT IS "OFF" D-1 AND D-2 SHALL BE FULLY CLOSED. WHEN THE UNIT IS "ON" D-2 AND D-1 SHALL MODULATE IN ACCORDANCE WITH THE FOLLOWING SEQUENCE:
6. SUPPLY FAN VOLUME CONTROL
   a. SYSTEM VOLUME CONTROL WILL BE ACCOMPLISHED UTILIZING VARIABLE SPEED DRIVES. PROVIDE 4-20 MA DC OR 0-10 VDC STATIC PRESSURE CONTROL SIGNAL TO MODULATE FAN SPEED AS SPECIFIED HEREIN. RATE OF CHANGE OF FAN SPEED SHALL BE ADJUSTABLE. FOUR SUPPLY DUCT PRESSURE SIGNALS SHALL BE USED FOR CONTROL. SEE SHEET H4.2 FOR LOCATION OF DUCT SP SENSORS AND TRANSMITTERS. PRESSURE SETPOINTS SHALL BE 1.0" W.C. (FA). THIS MINIMUM PRESSURE REQUIRED SHALL BE DETERMINED BY THE TEST-ADJUST-BALANCE CONTRACTOR DURING THE AIR BALANCE. SEE SPECIFICATION SECTION 15980, TESTING, ADJUSTING AND BALANCING. IF ANY OF THE DUCT PRESSURES ARE BELOW SETPOINT, SUPPLY DUCT PRESSURE SHALL BE ALLOWED TO RISE ABOVE SETPOINT IF NEEDED TO RAISE THE OTHER PRESSURE TO MEET SETPOINT.
   b. ARRANGE CONTROLS SO THAT AHU-1 WILL START ON LOW SPEED. ON FAILURE OF FAN VOLUME CONTROL SIGNAL, FAN SHALL GO TO LOW SPEED AND STOP.
   c. PROVIDE ALARM INDICATION AT E.C.C. FOR VFD FAULT CONDITION. BOTH N.O. AND N.C. CONTACTS SHALL BE PROVIDED WITH VFD. ON FAILURE OF A VFD, THE ASSOCIATED SUPPLY FAN SHALL GO TO LOW SPEED AND STOP.
   d. VFD'S SHALL RAMP UP AND DOWN FULL SCALE OVER 180 SECONDS (FA).
7. MAIN SUPPLY DUCT PRESSURE CONTROL:
   a. STATIC PRESSURE IN THE SUPPLY DUCT SHALL BE CONTROLLED BY NEW STATIC PRESSURE SENSOR/TRANSMITTERS; STATIC PRESSURE SENSOR/TRANSMITTERS SHALL BE LOCATED WHERE INDICATED ABOVE.
   b. STATIC PRESSURE SENSOR/TRANSMITTER SHALL MODULATE SUPPLY FAN TO MAINTAIN MAIN STATIC PRESSURE SETPOINT.
   c. THE STATIC PRESSURE CONTROL SETPOINTS SHALL BE 1.0" W.G. (FA) AS DETERMINED BY THE TEST-ADJUST-BALANCE CONTRACTOR DURING THE AIR BALANCE.
8. MISCELLANEOUS SUPPLY FAN CONTROL:
   a. VFD CURRENT INPUT TO PROVIDE FAN STATUS INDICATION TO E.C.C. CURRENT FUNCTION SHALL BE PROVIDED WITH VFD. PROVIDE ALARM INDICATION TO E.C.C. WHENEVER CURRENT LEVEL IS BELOW 10% OF MAXIMUM (FA) FOR 20 SECONDS (FA) OF START COMMAND. FAN SHALL THEN BE LOCKED OUT UNTIL RESET THROUGH E.C.C. BY BUILDING OPERATING PERSONNEL. ON FAILURE OF AN OPERATING FAN AS SENSED BY THE ASSOCIATED SWITCH INDICATION, THE SAME SEQUENCE SHALL OCCUR.
9. RETURN FAN VOLUME CONTROL:
   a. AHU-1 RETURN FAN VOLUME CONTROL WILL BE ACCOMPLISHED UTILIZING VARIABLE SPEED DRIVES. SEE PARAGRAPH C.6 BELOW
   b. ARRANGE CONTROLS SO THAT FAN WILL START ON LOW SPEED. ON FAILURE OF FAN VOLUME CONTROL SIGNAL, FAN SHALL GO TO LOW SPEED AND STOP.
   c. PROVIDE ALARM INDICATION AT E.C.C. FOR VFD FAULT CONDITION. BOTH N.O. AND N.C CONTACTS SHALL BE PROVIDED WITH VFD, VFD SHALL RAMP UP AND DOWN FULL SCALE OVER 180 SECONDS.
10. RETURN FAN CONTROL:
   a. PROVIDE CURRENT INPUT TO PROVIDE FAN STATUS INDICATION TO E.C.C. CURRENT FUNCTION WILL BE PROVIDED WITH VFD. PROVIDE ALARM INDICATION TO E.C.C. WHENEVER CURRENT LEVEL IS BELOW 10% OF MAXIMUM (FA) FOR 20 SECONDS (FA) OF START COMMAND. FAN SHALL THEN BE LOCKED OUT UNTIL RESET THROUGH E.C.C. BY BUILDING OPERATING PERSONNEL. ON FAILURE OF RETURN FAN AS SENSED BY THE ASSOCIATED CURRENT INDICATION, THE SAME SEQUENCE SHALL OCCUR.

C. RTU SEQUENCE OF OPERATION
1. THE SUPPLY AND RETURN FAN SHALL OPERATE CONTINUOUSLY.
2. WHENEVER OUTSIDE AIR DRY-BULB TEMPERATURE IS ABOVE 70° (FA), THE CONTROL SHALL OVERRIDE MIXED AIR CONTROLLER AND FULLY OPEN THE RETURN AIR DAMPER D-2 AND SET THE OUTSIDE AIR DAMPER D-1 TO MAINTAIN MINIMUM OUTDOOR AIR.
   a. THE COOLING COIL CONTROL VALVE SHALL MODULATE TO CONTROL SET POINT. THE SECONDARY CHILLED WATER PUMP SHALL START WITH THE SIGNAL TO MODULATE THE CONTROL VALVE. WHEN CHILLED WATER IS NOT NEEDED, THE PUMP SHALL STOP.
3. WHENEVER OUTSIDE AIR DRY-BULB TEMPERATURE IS BETWEEN 52°F (FA) AND 70° (FA), THE ECONOMIZER CONTROL SHALL MAINTAIN SETPOINT BY MODULATING DAMPERS D-1 AND D-2.
   a. THE TCP SHALL MAINTAIN THE SUPPLY AIR TEMPERATURE SENSED BY T-1.
4. WHEN THE TEMPERATURE OF THE OUTSIDE AIR, SENSED BY T-2 IS BELOW THE SUPPLY AIR TEMPERATURE, SENSED BY T-1, DAMPERS D-1 AND D-2 SHALL MODULATE TO MAINTAIN THE SCHEDULED SUPPLY AIR TEMPERATURE.
5. PRE-HEAT COIL
   a. WHEN THE OUTDOOR AIR TEMPERATURE IS BELOW 55°F (FA), THE PRE-HEAT COIL VALVE SHALL MODULATE TO MAINTAIN A PREHEAT COIL DISCHARGE AIR TEMPERATURE OF 55°F (FA). THE SECONDARY HOT WATER PUMP SHALL START WITH THE SIGNAL TO MODULATE THE HOT WATER CONTROL VALVE. WHEN HOT WATER IS NOT NEEDED, THE SECONDARY HOT WATER PUMP SHALL STOP. THE COOLING COIL CHILLED WATER CONTROL VALVE SHALL CLOSE.
6. AIR FLOW CONTROL
   a. THE SUPPLY AIR FLOW SHALL BE CONTROLLED BY THE TCP MODULATING THE SUPPLY FAN VARIABLE SPEED MOTOR CONTROLLER (VFD-2) TO MAINTAIN 1.0"W.C. (37 MM) OF DUCT STATIC PRESSURE (FIELD ADJUSTABLE). SENSED BY SP-1, SP-2, SP-3 AND SP-4. SEE ABOVE FOR LOCATION OF THE DUCT STATIC PRESSURE SENSORS/TRANSMITTERS..
   b. THE TCP, USING TOTAL SUPPLY AIR AND RETURN AIR FLOW SIGNALS, SHALL RESET THE RETURN AIR FAN VDFS TO MAINTAIN A CONSTANT AIR FLOW DIFFERENCE BETWEEN THE SUPPLY AIR AND THE RETURN AIR EQUAL TO MINIMUM OUTSIDE AIR.
   c. THE TCP, USING HIGH PRESSURE SENSOR SP-5 LOCATED AT THE SUPPLY FAN DISCHARGE, SHALL PREVENT THE SUPPLY FAN FROM DEVELOPING OVER 5" (125 MM) OF STATIC PRESSURE (FIELD ADJUSTABLE). IF STATIC PRESSURE AT SP-5 DOES EXCEED 5" (125 MM) THE SUPPLY AIR FAN SHALL STOP.
7. FREEZE PROTECTION
   IF THE AIR TEMPERATURE AS SENSED BY T-5 FALLS BELOW 45°F (FA) (7°C), AN ALARM SIGNAL SHALL INDICATE AT THE TCP AND ECC. IF THIS TEMPERATURE FALLS BELOW 40°F (FA) (4.4°C), THE SUPPLY AND RETURN FANS SHALL SHUT DOWN AND A CRITICAL ALARM SHALL INDICATE AT THE TCP AND ECC.
8. AUTOMATIC SHUTDOWN/RESTART
   WHEN SMOKE IS DETECTED BY EITHER SUPPLY OR RETURN AIR SMOKE DETECTORS, THE SUPPLY AND RETURN FANS SHALL SHUT "OFF" AND AN ALARM SIGNAL SHALL BE TRANSMITTED TO THE FIRE ALARM SYSTEM. DAMPER D-2 IN THE RETURN DUCT SHALL CLOSE. SUPPLY AND RETURN FANS SHALL RESTART AND DAMPERS D-2 SHALL OPEN WHEN THE FIRE ALARM CIRCUIT IS RESET.
9. EMERGENCY CONSTANT SPEED OPERATION
   UPON FAILURE OF THE VFD, THE SUPPLY AND RETURN FANS SHALL BE STARTED/STOPPED MANUALLY AT THE TCP OR ECC THROUGH THE BY-PASS STARTER. FANS SHALL THEN BE OPERATED AT CONSTANT SPEED.

D. MISCELLANEOUS CONTROLS:
   PROVIDE INDICATIONS AND ALARM CONDITIONS TO ECC FOR LOW VFD MOTOR CURRENT AND HIGH FILTER PRESSURE DROP (FA).

NOTE: TCP (TEMPERATURE CONTROL PANEL) REFERS TO THE CONTROL CONTRACTOR NEW CONTROL PANEL LOCATED IN THE FAN ROOM BELOW THE ROOF TOP UNIT.

SEQUENCE OF OPERATION: (EMERGENCY POWER MODE)

1. UPON LOSS OF REGULAR POWER, SUPPLY FAN SF-2 AND RETURN FAN RF-2 SHALL BE DEACTIVATED. MOTORIZED DAMPERS MS1, MS2, MS3, MS4, MR1, MR2, MR3 AND MR4 SHALL REMAIN FULLY OPENED. THE ENGINE GENERATOR SHALL START. AFTER A TIME DELAY OF 5 MIN. (FA), SUPPLY FAN SF-1 AND RETURN FAN RF-1 SHALL BE COMMANDED TO START & SHALL RAMP UP TO MAXIMUM SPEED.
2. MOTORIZED DAMPERS MS3 AND MR3 SERVING THE PATHOLOGY/RADIOLOGY AREAS SHALL REMAIN FULLY OPENED. MOTORIZED DAMPERS MS1, MS2, MS4, MR1, MR2 AND MR4 SHALL SLOWLY MODULATE TOWARDS THE CLOSED POSITION UNTIL DUCT STATIC PRESSURE SENSOR/TRANSMITTER SP-3 FAILS TO MAINTAIN ITS SET POINT. MOTORIZED DAMPERS MS1 AND MR1 SHALL MODULATE OPEN AS REQUIRED TO MAINTAIN SP-3 SET POINT.

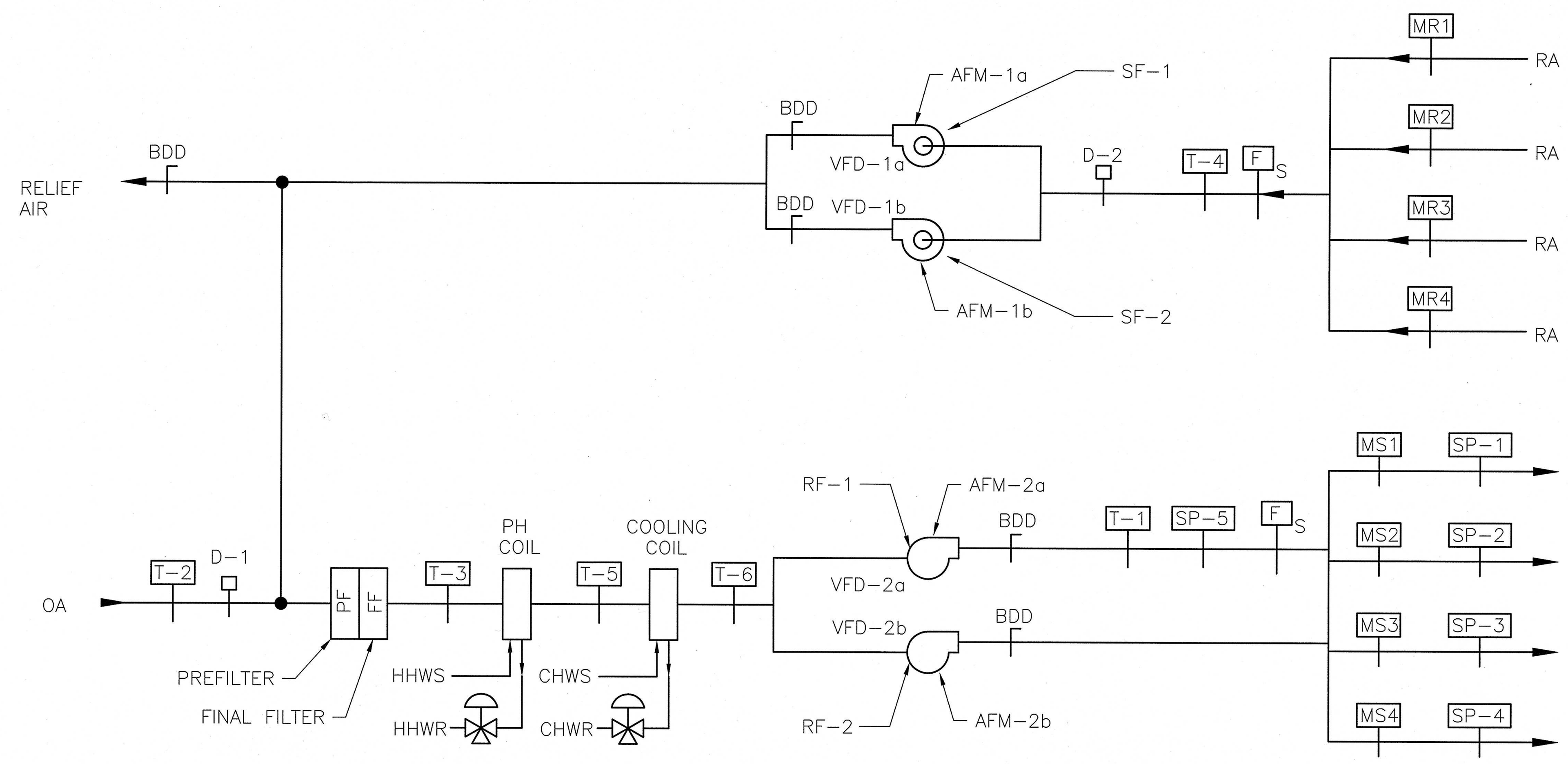

CONTROL DIAGRAM
SCALE: NONE

LEGEND

T-1	SF DISCHARGE
T-2	OA
T-3	MIXED AIR
T-4	RA
T-5	PH COIL DISCHARGE
T-6	COOLING COIL DISCHARGE
D-1	OA MOTORIZED DAMPER
D-2	RA MOTORIZED DAMPER
AFM-1a AND 1b	RETURN FAN AIR FLOW MEASURING STATION
AFM-2a AND 2b	SUPPLY FAN AIR FLOW MEASURING STATION
VFD-1a AND 1b	RETURN FAN VARIABLE FREQUENCY DRIVE
VFD-2a AND 2b	SUPPLY FAN VARIABLE FREQUENCY DRIVE
F S	SMOKE DETECTOR
SP-1 THROUGH SP-4	DUCT STATIC PRESSURE SENSOR AND TRANSMITTER
SP-5	DUCT HIGH STATIC PRESSURE SENSOR AND TRANSMITTER

GENERAL NOTES:

1. SEE CONTROL DAMPER AND DUCT CONNECTION POINT PLAN.
2. CLOSE-OFF PRESSURE OF ALL CONTROL VALVE SHALL BE EQUAL TO OR EXCEED THE TOTAL DYNAMIC HEAD OF THE ASSOCIATED CENTRAL PLANT HEATING HOT WATER PUMPS AND THE CHILLED WATER PUMPS.

SCALE: 3/4"=1'-0" 0 2 4 8 12
SCALE: 1/2"=1'-0" 0 2 4 8 12
SCALE: 1/4"=1'-0" 0 2 4 8 12
SCALE: 1/8"=1'-0" 0 2 4 8 12
092107

REGISTERED PROFESSIONAL ENGINEER KENT CALVIN LAWS No. M26762 Exp. 9/10 MECHANICAL STATE OF CALIFORNIA
K.F. DAVIS ENGINEERING, INC
530 LA GONDA WAY, SUITE E
DANVILLE, CA 94526

Revisions:
Approved:
Approved:

Drawing Title: TEMPERATURE CONTROLS AND SEQUENCE OF OPERATIONS
Approved: Medical Center Director
Approved: Chief, Engineering Service
Drawn: RMK
Checked: KL
Project Title: BLDG 650 REPLACE AIR HANDLERS 1 THRU 4, 7 AND 9 – 15
Building Number:
Location: MATHER VAMC MATHER CALIFORNIA
Date: 08/25/08
Project No.: 612A4-07-342
DRAWING No. H5.1
Dwg. Of
Department of Veterans Affairs