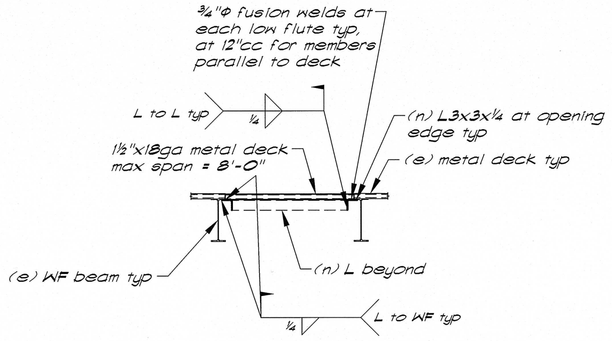

Beam perpendicular to deck

Section (G/S3.01) — ½"=1'-0"

Note: Also applies to (n) opngs in (e) concrete over metal deck with the following changes:
1. Locate (n) support members a max of 8" / min of 0" from edge of (n) opng to edge of (n) support member. Coordinate exact location w/ requirements of MEP systems and / or Arch'l dwgs.
2. Omit (n) deck, (n) dowels, and (n) conc. fill
3. For opngs ≤ 2'-0", angles may be placed above or below deck. Coordinate above deck installations with Arch'l and MEP drawings and all possible system constraints
4. The opng width may be increased to 2'-6" provided L4x4x⅜" angles are used. Install per the requirements for opngs ≤ 2'-0". This applies to the opening edge that is perpendicular to the deck span. The opening edge parallel to the deck span may be increased to 3'-0" max. provided the L4x4x⅜" is provided as noted.
5. Provide anchors along the entire length of angles at opngs reinforced with angles.

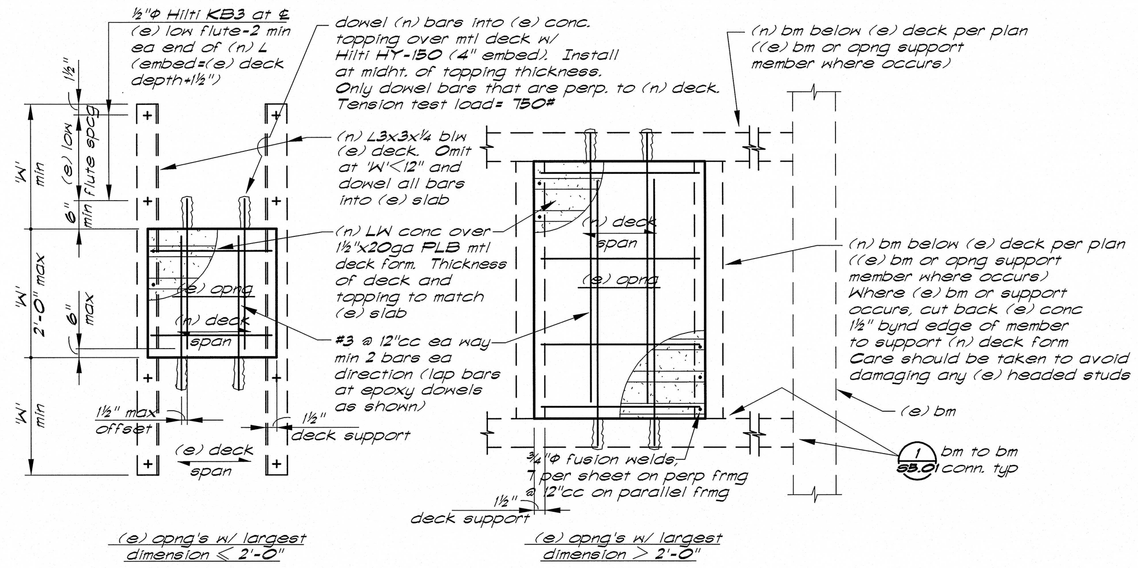

(H/S3.01) Typical Infill at (e) Concrete Over Mtl Deck

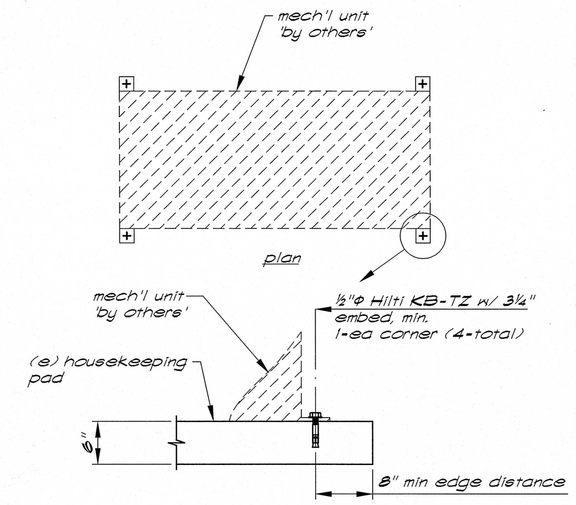

Detail (J/S3.01) — NTS

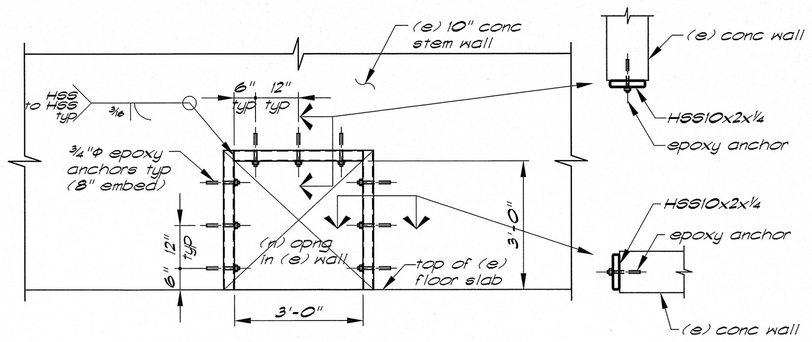

Elevation (F/S3.01) — ½"=1'-0"

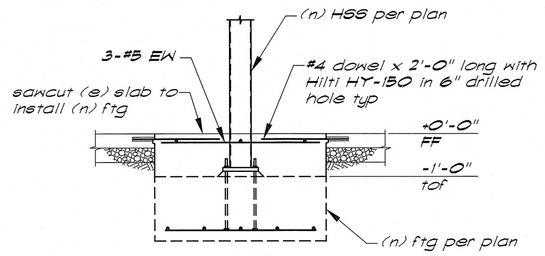

Section (E/S3.01) — ½"=1'-0"

Note: See Arch'l drawings for extent of exterior wall demolition and replacement at braced frames.

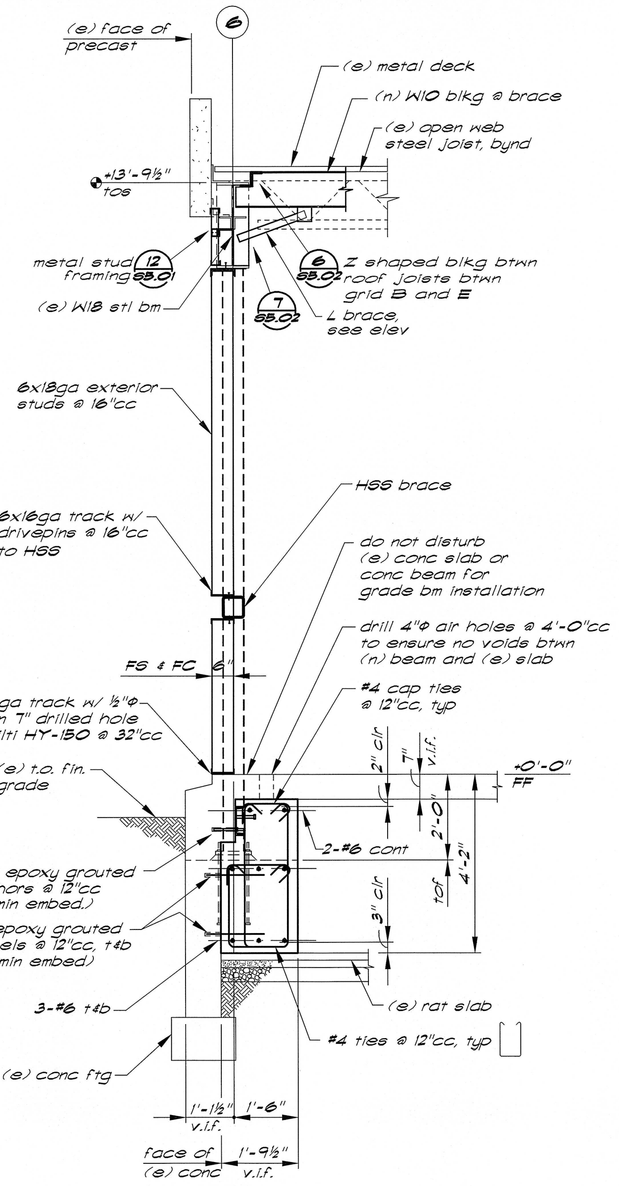

Section (B/S3.01) — ½"=1'-0"

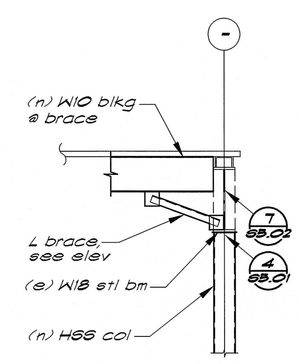

Section (C/S3.01) — ½"=1'-0"

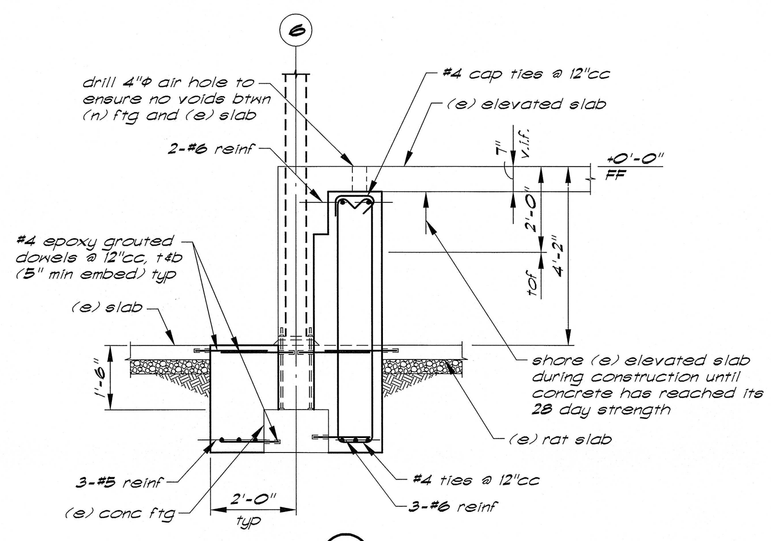

Section (D/S3.01) — ½"=1'-0"

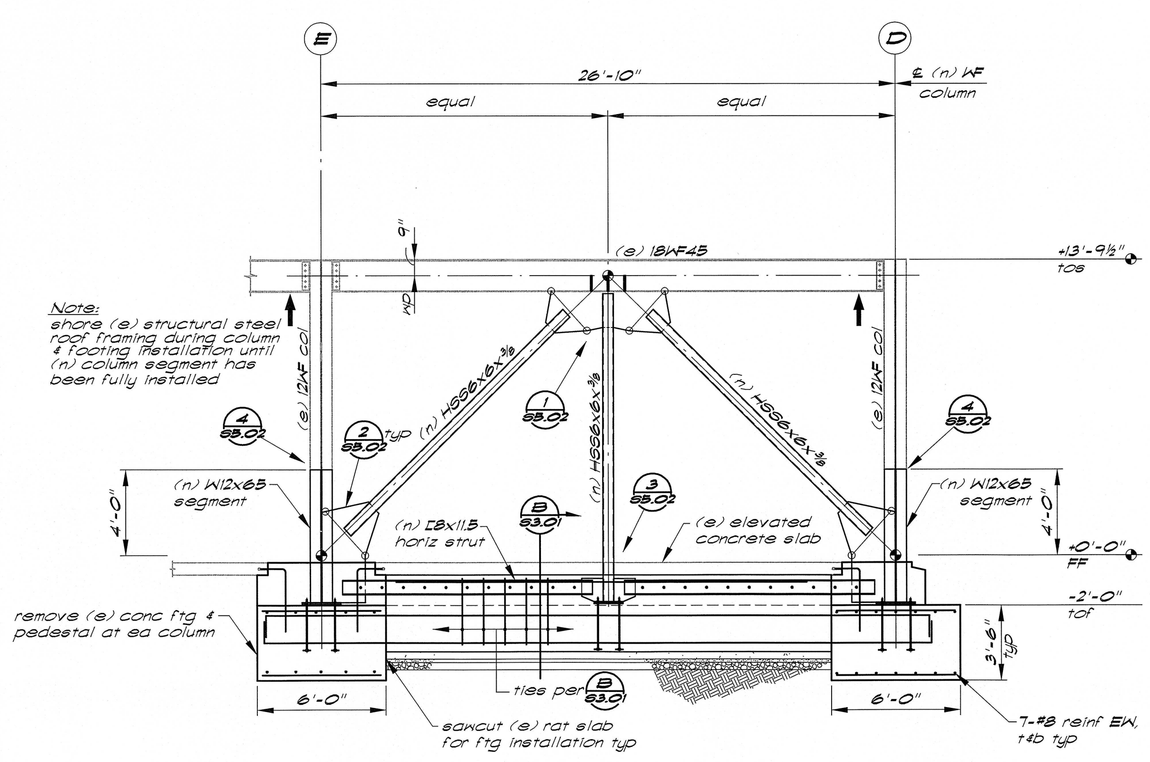

Braced Frame Elevation (A/S3.01) — ¼"=1'-0"

REGISTERED PROFESSIONAL ENGINEER DREW A. CHALSTROM No. 4670 Exp. 12/31/08 STRUCTURAL STATE OF CALIFORNIA

Buehler & Buehler Structural Engineers, Inc.
600 Q Street, Suite 200, Sacramento, CA 95814
tel 916.443.0303 fax 916.443.0313

BLDG 650

K.F. DAVIS ENGINEERING, INC
530 LA GONDA WAY, SUITE E
DANVILLE, CA 94526

Revisions:	Drawing Title: ELEVATIONS AND SECTIONS	Project Title: BLDG 650 REPLACE AIR HANDLERS 1 THRU 4, 7 AND 9 – 15	Date: 08/25/08
			Project No.: 612A4-07-342
Approved:	Approved: Medical Center Director	Drawn: KYM	Building Number:
Approved:	Approved: Chief, Engineering Service	Checked: DAC	Location: MATHER VAMC MATHER CALIFORNIA
			DRAWING No. S3.01 Dwg. Of

Department of Veterans Affairs