Brace Welding Schedule (55.02)

Tube Bracing	PL 't'	weld size ▷6	weld lengths ▷L1	▷L2	▷L3	▷L4	▷L5	Comments
TS5x3	1"	¼"	8"	N/A	N/A	N/A	N/A	
TS6x6	1"	5/16"	12"	30"	18"	5'-3½"	N/A	
[8x11.5	1"	5/16"	9"	N/A	N/A	N/A	N/A	

Notes:

1. For typical TS weld detail see (8/55.02)
2. Gusset PL's to be ASTM A572 Gr 50
3. Length of weld from gusset PL to bm. or col. shall be full length of PL. Weld lengths shown above minimum and may need to be exceeded to accomodate connection geometry. See details 1, 2, 4, 5, 6, 7 and 8/55.02
4. Plate lengths may be adjusted ±½" to facilitate fabrication.
5. Weld TS diag. brcg to gusset PL's after metal deck & concrete has been placed.
6. Where diag brcg & horiz. strut attach to a common conn PL, the diag brcg size shall determine the conn PL 't'. Where no diag brcg occurs use ¾" PL.

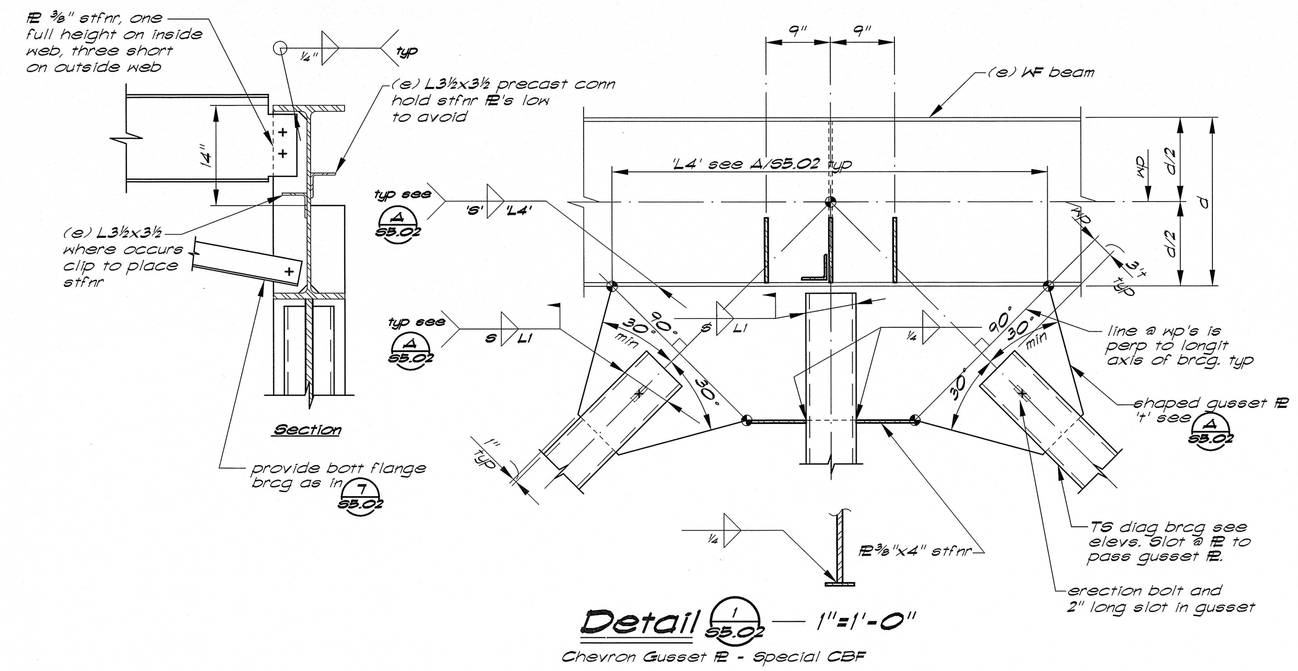

Detail (1/55.02) — 1"=1'-0"

Chevron Gusset PL - Special CBF

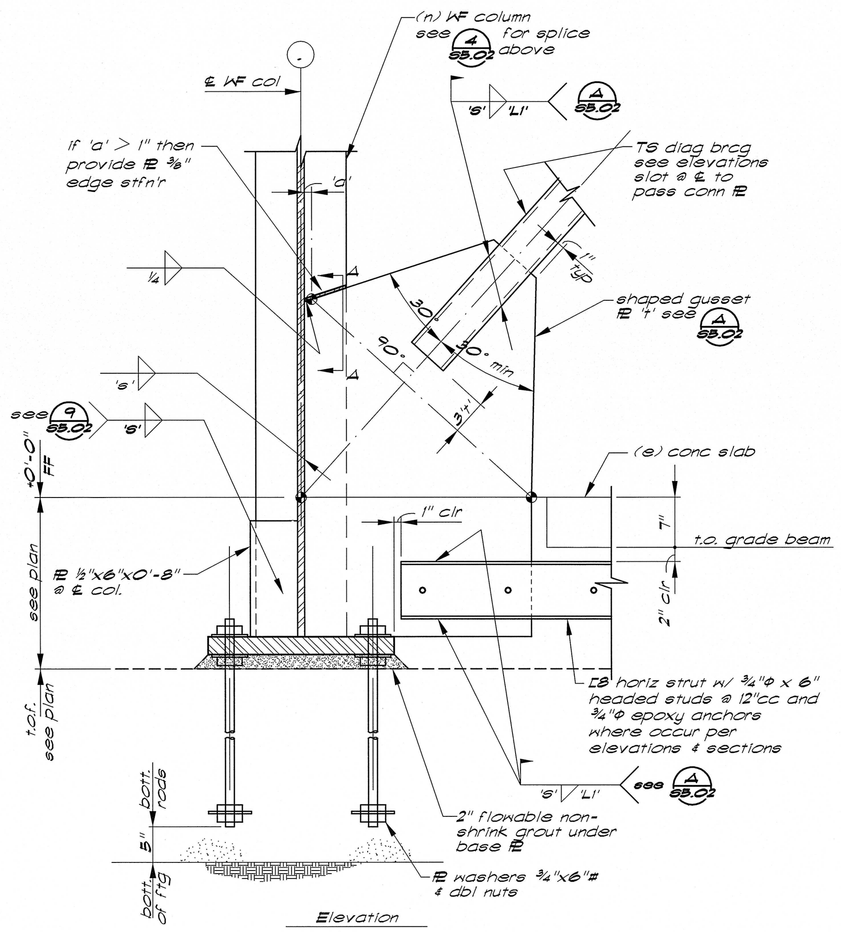

Detail (2/55.02) — 1"=1'-0"

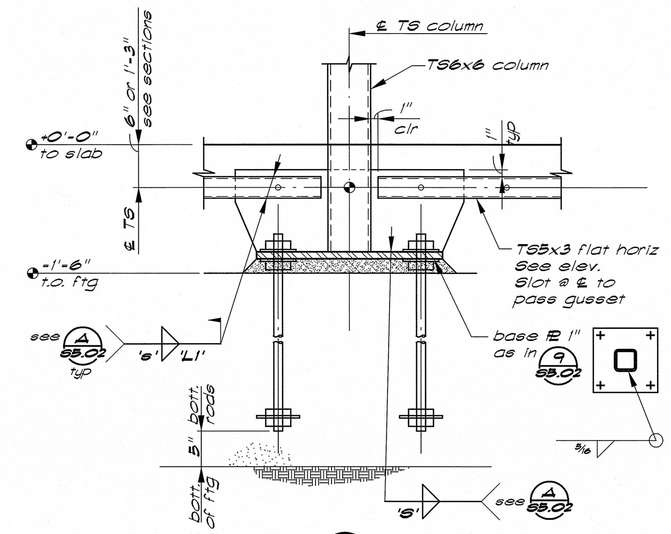

Detail (3/55.02) — 1"=1'-0"

Brace to gusset @ Foundation

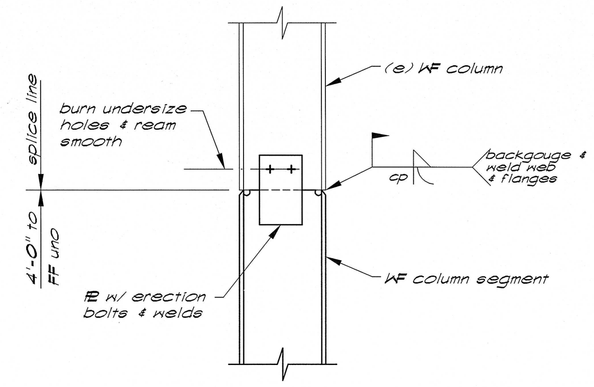

Detail (4/55.02) — 1"=1'-0"

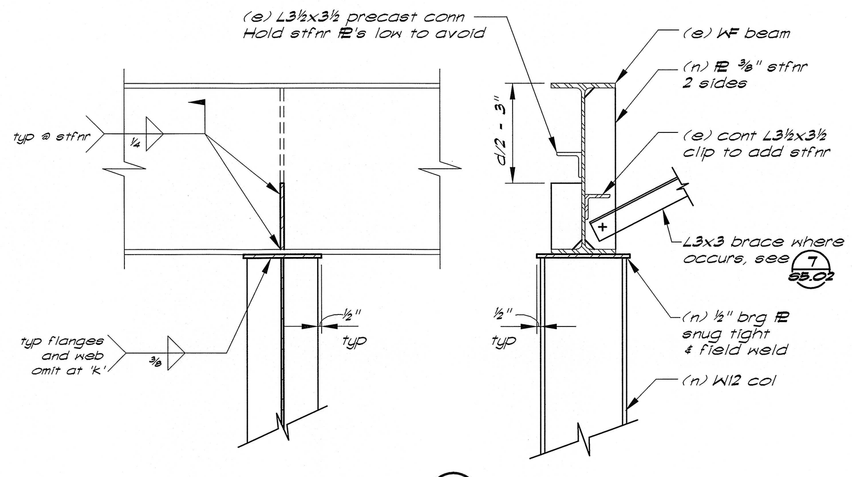

Detail (5/55.02) — 1"=1'-0"

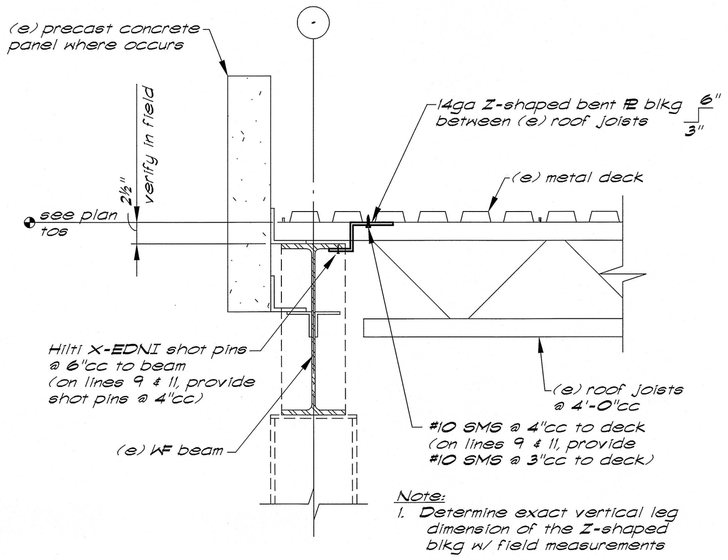

Note:

1. Determine exact vertical leg dimension of the Z-shaped blkg w/ field measurements
2. Horizontal leg at deck shall extend to nearest low flute for SMS attachment. Extend 6" horizontal leg if required. Determine by field measurement.

Detail (6/55.02) — 1"=1'-0"

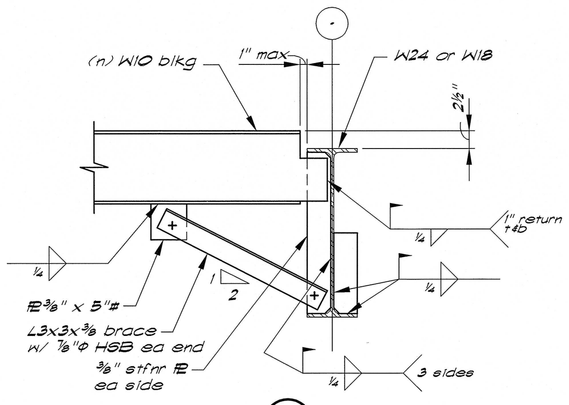

Detail (7/55.02) — 1"=1'-0"

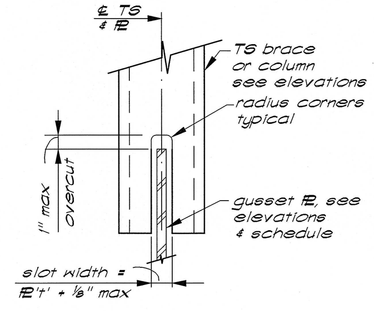

Typical Slot @ TS applies to all uno.

Detail (8/55.02) — no scale

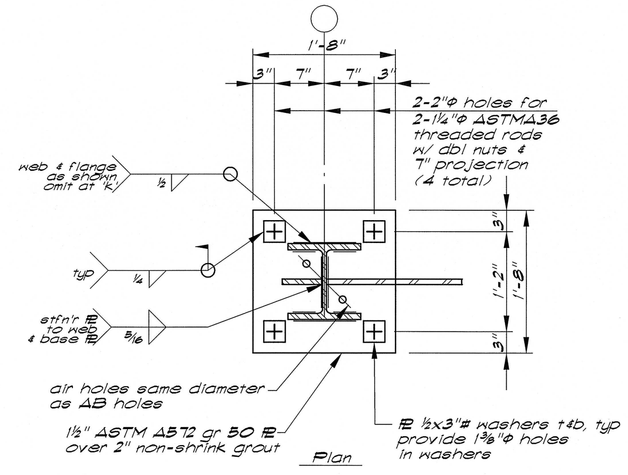

Detail (9/55.02) — 1"=1'-0"

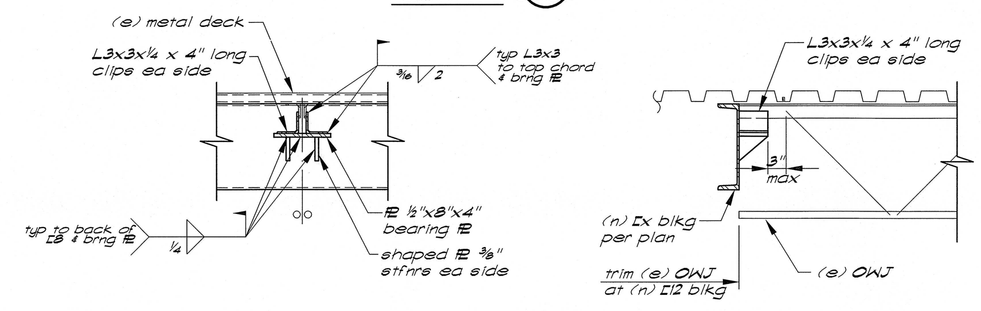

Detail (10/55.02) — 1"=1'-0"

REGISTERED PROFESSIONAL ENGINEER — DREW A. CHALSTROM No. 4670 Exp. 12/31/08 STRUCTURAL — STATE OF CALIFORNIA

Buehler & Buehler Structural Engineers, Inc.
600 Q Street, Suite 200, Sacramento, CA 95814
tel 916.443.0303 fax 916.443.0313

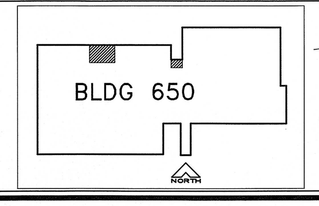

K.P. DAVIS ENGINEERING, INC
530 LA GONDA WAY, SUITE E
DANVILLE, CA 94526

Revisions:	Drawing Title: DETAILS	Project Title: BLDG 650 REPLACE AIR HANDLERS 1 THRU 4, 7 AND 9 – 15	Date: 08/25/08
			Project No.: 612A4-07-342
Approved:	Approved: Medical Center Director	Drawn: KYM	Building Number:
Approved:	Approved: Chief, Engineering Service	Checked: DAC	Location: MATHER VAMC MATHER CALIFORNIA
			DRAWING No. S5.02 Dwg. Of

Department of Veterans Affairs

SCALE: 3/4"=1'-0" 1/2"=1'-0" 1/4"=1'-0" 1/8"=1'-0"

F:\S05-17800\S5-02.dwg 08/27/08 9:58:23am 96 KaMM