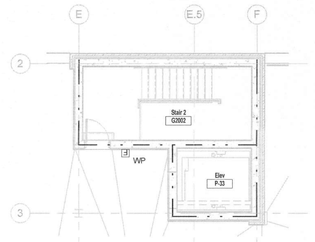

2 FA102 PARTIAL ROOF FIRE ALARM PLAN
1/8" = 1'-0"

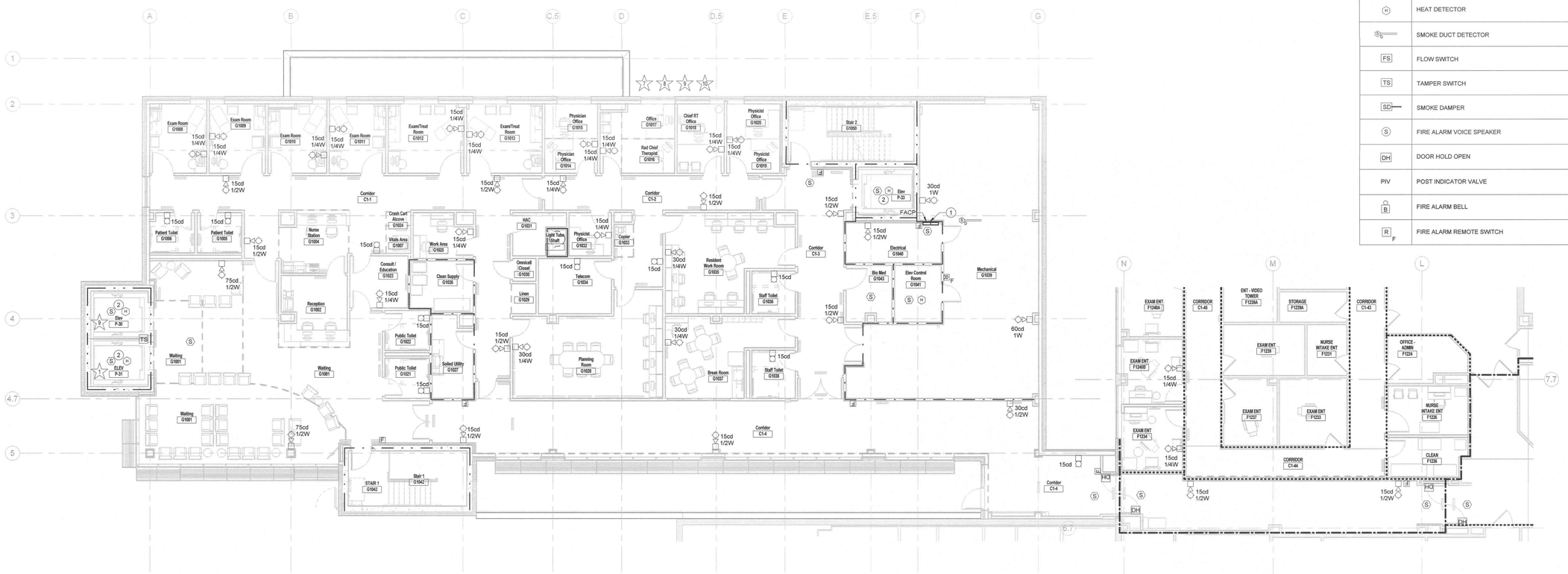

1 FA102 LEVEL 1 FIRE ALARM PLAN
1/8" = 1'-0"

☆ ALTERNATE NOTES

1. OMIT ELEVATOR P-31. INFILL DOORS ON BOTH LEVELS W/ SHAFTWALL. SEE WALL TYPE S4.2 ON GI004.
2. OMIT SUNDOLIER DAYLIGHT HARVESTER. OPENING IN CONCRETE FLOORS, SHAFTWALL AND CEILING FIXTURE TO REMAIN IN CONTRACT.
3. REPLACE 60 MIL KEE ROOFING MEMBRANE WITH 36 MIL KEE ROOFING MEMBRANE.
4. OMIT ROOF GARDEN SYSTEM, LANDSCAPING AT ROOF GARDEN AND GUARDRAIL SURROUNDING ROOF GARDEN. OMIT TRELLIS ON EXISTING MRI WALL. REMOVE PAVERS AT ROOF GARDEN. ROOFING MEMBRANE, INSULATION AND LIQUID WATERPROOFING BELOW ROOF GARDEN TO REMAIN IN CONTRACT.
5. OMIT SITE WALLS, ALUMINUM GATES, TRANSLUCENT PANELS AND LANDSCAPING NEAR LOUNGES/HOLDING BAYS. REPLACE SITE WALLS WITH RETAINING WALL SHOWN. SEE SHEETS AE513 AND AE514.
6. OMIT VEHICULAR ENTRANCE CANOPY. REPLACE WITH PEDESTRIAN ENTRANCE CANOPY, SEE SHEET AE512. REPLACE VESTIBULE STOREFRONT WITH STOREFRONT INDICATED. OMIT SUPPORTING CAST-IN-PLACE COLUMNS AND METAL STRUCTURE AND REPLACE WITH STRUCTURE FOR PEDESTRIAN ENTRANCE CANOPY. SEE SHEET S-601.
7. OMIT AREA INDICATED. AREA TO BE UNFINISHED SPACE. INCLUDE GYPSUM BOARD AND VAPOR BARRIER ON EXTERIOR WALLS.
8. OMIT AREA INDICATED. AREA TO BE UNFINISHED SPACE. INCLUDE GYPSUM BOARD AND VAPOR BARRIER ON EXTERIOR WALLS.
9. OMIT AREA INDICATED AND ELEVATOR P-30. INFILL DOORS ON BOTH LEVELS W/ SHAFTWALL. AREA TO BE UNFINISHED SPACE. INCLUDE GYPSUM BOARD AND VAPOR BARRIER ON EXTERIOR WALLS.
10. OMIT AREA INDICATED. AREA TO BE UNFINISHED SPACE. INCLUDE GYPSUM BOARD AND VAPOR BARRIER ON EXTERIOR WALLS.

FIRE ALARM LEGEND

SYMBOL	DESCRIPTION
	FIRE ALARM SPEAKER/STROBE LIGHT-WALL MOUNTED SUCH THAT THE ENTIRE LENS IS NOT LESS THAN 80" AND NOT GREATER THAN 96" AFF. #cd - CANDELA SETTING, # W - SPEAKER SETTING
	FIRE ALARM STROBE LIGHT-WALL MOUNTED SUCH THAT THE ENTIRE LENS IS NOT LESS THAN 80" AND NOT GREATER THAN 96" AFF. #cd - CANDELA SETTING
	FIRE ALARM STROBE LIGHT-CEILING MOUNTED SUCH THAT THE ENTIRE LENS IS NOT GREATER THAN 10'-0" AFF. #cd - CANDELA SETTING
	FIRE ALARM SPEAKER/STROBE LIGHT-CEILING MOUNTED SUCH THAT THE ENTIRE LENS IS NOT GREATER THAN 10'-0" AFF. #cd - CANDELA SETTING, # W - SPEAKER SETTING
F	MANUAL FIRE ALARM PULL STATION TO BE LOCATED WITHIN 5'-0" OF THE EXIT DOORWAY OPENING. MIN. 42" AFF, MAX. 48" AFF.
FACP	FIRE ALARM CONTROL PANEL
FAEP	FIRE ALARM EXTENDER PANEL
FAA	FIRE ALARM ANNUNCIATOR
S	SMOKE DETECTOR
H	HEAT DETECTOR
	SMOKE DUCT DETECTOR
FS	FLOW SWITCH
TS	TAMPER SWITCH
SD	SMOKE DAMPER
S	FIRE ALARM VOICE SPEAKER
DH	DOOR HOLD OPEN
PIV	POST INDICATOR VALVE
B	FIRE ALARM BELL
R F	FIRE ALARM REMOTE SWITCH

GENERAL NOTES:

A. ALL FIRE ALARM DEVICES AND EQUIPMENT SHALL BE INSTALLED IN ACCORDANCE WITH THE PROJECT SPECIFICATIONS, THE MANUFACTURER'S RECOMMENDED PROCEDURES, ALL APPLICABLE LOCAL AND STATE CODES, AMERICAN DISABILITIES ACT AND WITH THE LATEST EDITION OF THE NATIONAL ELECTRICAL CODE, BICSI STANDARDS, AND VA STANDARDS.

B. CONTRACTOR SHALL COORDINATE THE LOCATION OF CEILING MOUNTED FIRE ALARM DEVICES WITH LOCATION OF CEILING MOUNTED LIGHTING AND HVAC DIFFUSERS.

C. CONTRACTOR SHALL COORDINATE ALL WALL MOUNTED DEVICES WITH ARCHITECTURAL DRAWINGS.

D. ALL FIRE ALARM CABLING SHALL BE IN FACTORY PAINTED RED EMT CONDUIT.

E. A CORRIDOR, ROOM, OR ADJACENT SPACE WITH TWO OR MORE VISIBLE FIRE ALARM NOTIFICATION DEVICES WITHIN THE FIELD OF VIEW SHALL FLASH IN SYNCHRONIZATION.

F. CONTRACTOR SHALL COORDINATE ALL THE SPRINKLER SYSTEM POST INDICATOR VALVE, TAMPER SWITCH, AND FLOW SWITCH LOCATIONS WITH THE SPRINKLER CONTRACTOR.

G. POST INDICATOR VALVE SHALL HAVE TAMPER AND FLOW SWITCHES CONNECTED INTO THE FIRE ALARM SYSTEM. SEE CIVIL PLANS FOR LOCATION(S).

H. SEE E-002 FOR ELECTRICAL BID ALTERNATES.

SHEET KEY NOTES:

1 FIRE ALARM CONTROL PANEL. SEE SHEET FA501 FOR DETAILS. SEE SHEETS EY103 AND EY104 FOR FIRE ALARM CONTROL PANEL CABLE ROUTING.

2 PROVIDE SMOKE AND HEAT DETECTORS (OR COMBINATION DEVICE) AT TOP OF ELEVATOR SHAFT.

WALL RATING LEGEND

- 0 HOUR SMOKE RESISTANT
- 1 HOUR FIRE RATED BARRIER
- 2 HOUR FIRE RATED BARRIER
- 1 HOUR SMOKE BARRIER
- 2 HOUR SMOKE BARRIER

KEY PLAN

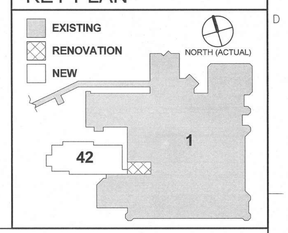

FULLY SPRINKLERED
FINAL CONSTRUCTION DOCUMENTS

Revisions	Date

CONSULTANTS:

rpadesign — 5960 Fairview Road, Suite 500, Charlotte, NC 28210, 704-887-3500
Coulter | Jewell | Thames — 111 West Main Street, Durham, NC 27701, 919-628-0368
GM GARDNER & McDANIEL P.A. CONSULTING ENGINEERS — P. O. Box 51967, Durham, NC 27717, 919-489-0926
CRENSHAW CONSULTING Gray Jewelry — 3516 Bush Street, Suite 200, Raleigh, NC 27609, 919-871-1070

NORTH CAROLINA PROFESSIONAL SEAL 23894 ENGINEER JOHN KEVIN MASON 04/28/15

PROJECT MANAGER:
APOGEE Consulting Group, www.acg-pa.com
Raleigh, NC
Indianapolis, IN
Philadelphia, PA
Pittsburgh, PA
Virginia Beach, VA
Fort Collins, CO
(919) 858-7420

Project Number	Scale
13-290	As indicated

Drawing Title: LEVEL 1 AND PARTIAL ROOF FIRE ALARM PLAN

Approved: Project Director

Project Title: VA Durham Specialty Care Building 42

Location: Durham, North Carolina

Date	Checked	Drawn
04/28/2015	JKM/RSB	EAG

Project Number: 558-321
Building Number: 42
Drawing Number: FA102
Dwg. 2 of 3

Office of Construction and Facilities Management
Department of Veterans Affairs

VA FORM 08-6231

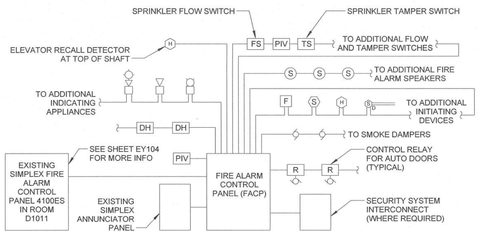

1 / FA501 FIRE ALARM RISER DIAGRAM
N.T.S.

NOTES:

1. FIRE ALARM SYSTEM SHALL BE INTERCONNECTED WITH ACCESS CONTROL SYSTEM TO ALLOW EGRESS DURING ALARM CONDITIONS. COORDINATE BETWEEN ACCESS CONTROL SYSTEM AND FIRE ALARM SYSTEM MANUFACTURERS.
2. ALL FIRE ALARM WIRING SHALL BE IN EMT CONDUIT FACTORY PAINTED RED.
3. ALL WIRING SHALL BE AS RECOMMENDED BY MANUFACTURER.
4. PROVIDE SEPARATE OUTPUT SIGNALS TO AIR HANDLER UNIT VFD FOR INDIVIDUAL UNIT SHUT-DOWN.
5. PROVIDE ZONE ADAPTER MODULES TO CONNECT NON ADDRESSABLE DEVICES SUCH AS FLOW AND TAMPER SWITCHES, DOOR HOLD-OPEN DEVICES, AND CONTROL SIGNALS.
6. PROVIDE POWER SUPPLY AND/OR NAC (NOTIFICATION APPLIANCE CIRCUIT) PANEL AS REQUIRED FOR ADDITIONAL DEVICES.
7. PROVIDE POWER AMPLIFIERS FOR ALL SPEAKERS.
8. NEW SYSTEM SHALL MATCH EXISTING SIMPLEX/GRINNELL 4100 ES.
9. PROVIDE ADDRESSABLE RELAY MODULES FOR ELEVATOR PRIMARY RECALL, ELEVATOR ALT. RECALL AND IN CAB NOTIFICATION.
10. PROVIDE ADDRESSABLE CONTROL MODULES FOR ELEVATOR EMERGENCY SHUNT TRIP.
11. PROVIDE ADDRESSABLE INTERFACE MODULES FOR ELEVATOR EMERGENCY SHUNT POWER SUPERVISION.

FIRE ALARM SYSTEM INPUT/OUTPUT MATRIX

INPUT DEVICE ↓ / OUTPUT →	1. SOUND GENERAL BUILDING ALARM FOR OTHER AND HIGH RISE (NON-HEALTH CARE). SEE SECTION 7.2.1	2. NOTIFY NECESSARY STAFF FOR RESPONSE PLAN FOR OTHER AND HIGH RISE BUILDINGS ONLY (ALARM SIGNAL MAY BE DIFFERENT ON DIFFERENT FLOORS).	3. NOTIFY FIRE DEPARTMENT.	4. INITIATE SUPERVISORY SIGNAL TO A 24-HOUR MANNED FACILITY FOR IMMEDIATE RESPONSE.	5. CLOSE ASSOCIATE SMOKE BARRIER DOORS ON FIRE LOCK.	6. CLOSE DAMPERS ON FAN PROXIMATE TO DETECTOR.	7. SHUT DOWN AIR HANDLER SERVED BY THE DETECTOR.	8. RECALL ELEVATOR.
DUCT SMOKE DETECTOR *				X		X	X a	
AREA SMOKE DETECTOR *	X	X	X					
DOOR RELEASE SMOKE DETECTOR *	X	X	X		X	X		
ELEVATOR SMOKE DETECTOR *	X	X	X					X
MANUAL PULL STATION	X	X	X		X			
ELEVATOR MACHINE ROOM HEAT DETECTOR	X	X	X					
GENERATOR ROOM HEAT DETECTOR	X	X	X					
SPRINKLER WATERFLOW / PRESSURE SWITCH	X	X	X		X			
WATER CONTROL VALVE TAMPER				X				
HIGH/ LOW PRESSURE DRY-PIPE SPRINKLER SYSTEM				X				
GAS EXTINGUISHING SYSTEMS	X	X	X		X			
DRY-PIPE VALVE ROOM TEMPERATURE ALARM				X				

* WHILE NFPA 101 DOES NOT REQUIRE SOME DETECTORS TO NOTIFY BUILDING OCCUPANTS, VA REQUIRES ALL SMOKE DETECTORS, OTHER THAN DUCT SMOKE DETECTORS, TO NOTIFY BUILDING OCCUPANTS AS REQUIRED BY THE LIFE SAFETY CODE OR ITS REFERENCES.
** THOSE DOORS THAT ARE REQUIRED TO BE TIED TO THE FIRE ALARM SYSTEM SUCH AS DELAYED EGRESS AND ACCESS CONTROLLED DOORS.
a - DO NOT PROVIDE DUCT DETECTORS IN DEDICATED (100%) EXHAUST FANS, THEY SHOULD CONTINUE TO RUN.

FIRE ALARM LEGEND

SYMBOL	DESCRIPTION
	FIRE ALARM SPEAKER/STROBE LIGHT-WALL MOUNTED SUCH THAT THE ENTIRE LENS IS NOT LESS THAN 80" AND NOT GREATER THAN 96" AFF #cd - CANDELA SETTING, # W - SPEAKER SETTING
	FIRE ALARM STROBE LIGHT-WALL MOUNTED SUCH THAT THE ENTIRE LENS IS NOT LESS THAN 80" AND NOT GREATER THAN 96" AFF. #cd - CANDELA SETTING
	FIRE ALARM STROBE LIGHT-CEILING MOUNTED SUCH THAT THE ENTIRE LENS IS NOT GREATER THAN 10'-0" AFF. #cd - CANDELA SETTING
	FIRE ALARM SPEAKER/STROBE LIGHT-CEILING MOUNTED SUCH THAT THE ENTIRE LENS IS NOT GREATER THAN 10'-0" AFF. #cd - CANDELA SETTING, # W - SPEAKER SETTING
F	MANUAL FIRE ALARM PULL STATION TO BE LOCATED WITHIN 5'-0" OF THE EXIT DOORWAY OPENING. MIN. 42" AFF, MAX. 48" AFF.
FACP	FIRE ALARM CONTROL PANEL
FAEP	FIRE ALARM EXTENDER PANEL
FAA	FIRE ALARM ANNUNCIATOR
S	SMOKE DETECTOR
H	HEAT DETECTOR
SD	SMOKE DUCT DETECTOR
FS	FLOW SWITCH
TS	TAMPER SWITCH
SD	SMOKE DAMPER
S	FIRE ALARM VOICE SPEAKER
DH	DOOR HOLD OPEN
PIV	POST INDICATOR VALVE
B	FIRE ALARM BELL
R F	FIRE ALARM REMOTE SWITCH

FIRE ALARM GENERAL NOTES

1. FIRE ALARM SYSTEM AND COMPONENTS SHALL MEET THE FOLLOWING CODES:
   - A. NFPA 13 - STANDARD FOR THE INSTALLATION OF SPRINKLER SYSTEM.
   - B. NFPA 14 - STANDARD FOR THE INSTALLATION OF STANDPIPE SYSTEM.
   - C. NFPA 20 - STANDARD FOR THE INSTALLATION OF FIRE PUMP.
   - D. NFPA 70 - NATIONAL ELECTRIC CODE.
   - E. NFPA 72 - NATIONAL FIRE ALARM CODE.
   - F. NFPA 90A STANDARD FOR THE INSTALLATION OF AIR CONDITIONING.
   - G. NFPA 101 - LIFE SAFETY CODE.
   - H. VA STANDARDS.
   - I. ANSI S3.41 AUDIBLE EMERGENCY EVACUATION SIGNAL.
2. FIRE ALARM SYSTEM SHALL COMPLY WITH FACTORY MUTUAL RESEARCH CORPORATION (FM).
3. ALL FIRE ALARM CABLING SHALL BE IN CONDUIT. CONDUIT SHALL BE FACTORY PAINTED RED.
4. THE CONTRACTOR IS RESPONSIBLE FOR TESTING THE EXISTING FIRE ALARM SYSTEM IN THE AREA OF WORK AND ADJACENT AREAS FULLY, PRIOR TO THE START OF WORK. ANY DEFICIENCIES OR NON-OPERATION OF COMPONENTS OF THE FIRE ALARM SYSTEM SHALL BE BROUGHT TO THE ATTENTION OF THE OWNER AND ENGINEER AT THAT TIME. UPON COMPLETION OF WORK, THE AFFECTED AREA OF WORK AND ADJACENT AREAS SHALL AGAIN BE FULLY TESTED 100%. ANY PORTION OF THE FIRE ALARM SYSTEM WHICH IS NON-FUNCTIONAL OR NON-COMPLIANT WITHIN THE AREA OF WORK OR ADJACENT SPACES AT THAT TIME SHALL BE REPAIRED AT NO ADDITIONAL COST TO THE OWNER.

FULLY SPRINKLERED
FINAL CONSTRUCTION DOCUMENTS

Revisions	Date

CONSULTANTS:

rpadesign — 5960 Fairview Road, Suite 500, Charlotte, NC 28210, 704-887-3500
Coulter Jewell Thames — 111 West Main Street, Durham, NC 27701, 919-628-0368
GM GARDNER & McDANIEL P.A. CONSULTING ENGINEERS — P. O. Box 51967, Durham, NC 27717, 919-489-0926
CRENSHAW CONSULTING GROUP — 3516 Bush Street, Suite 200, Raleigh, NC 27609, 919-871-1070

NORTH CAROLINA PROFESSIONAL SEAL 23894 ENGINEER JOHN KEVIN MASON 11/20/15

PROJECT MANAGER:
APOGEE Consulting Group, www.acg-pa.com
Raleigh, NC
Indianapolis, IN
Philadelphia, PA
Pittsburgh, PA
Virginia Beach, VA
Fort Collins, CO
(919) 858-7420

Project Number: 13-290
Scale: N.T.S.

Drawing Title: FIRE ALARM DETAILS
Approved: Project Director

Project Title: VA Durham Specialty Care Building 42
Location: Durham, North Carolina
Date: 04/28/2015 | Checked: JKM/RSB | Drawn: EAG

Project Number: 558-321
Building Number: 42
Drawing Number: FA501
Dwg. 3 of 3

Office of Construction and Facilities Management
Department of Veterans Affairs

VA FORM 08-6231

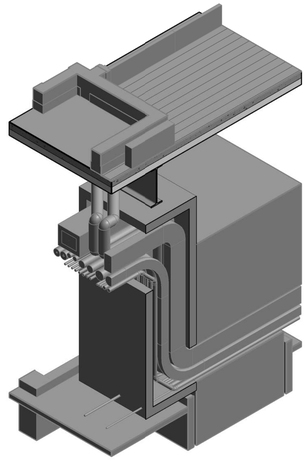

B5 R-901 **LINAC DUCT SHEILDING CUT 3D VIEW**
SCALE:

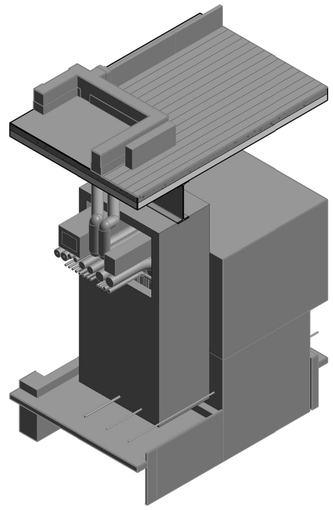

B6 R-901 **LINAC DUCT SHIELDING 3D VIEW**
SCALE:

THIS SHEET IS FOR REFERENCE ONLY. SEE OTHER SHEETS FOR MORE INFORMATION.

FULLY SPRINKLERED
FINAL CONSTRUCTION DOCUMENTS

Revisions	Date

CONSULTANTS:

rpadesign
5960 Fairview Road, Suite 500
Charlotte, NC 28210
704-887-3500

Coulter | Jewell | Thames
111 West Main Street
Durham, NC 27701
919-628-0368

GARDNER & McDANIEL, P.A. CONSULTING ENGINEERS
P. O. Box 51967
Durham, NC 27717
919-489-0926

CRENSHAW CONSULTING Engineers
3516 Bush Street, Suite 200
Raleigh, NC 27609
919-871-1070

FOR REFERENCE ONLY

PROJECT MANAGER:

APOGEE Consulting Group
www.acg-pa.com
Raleigh, NC
Indianapolis, IN
Philadelphia, PA
Pittsburgh, PA
Virginia Beach, VA
Fort Collins, CO
(919) 858-7420

Project Number	Scale
13-290	

Drawing Title: COORDINATION VIEWS

Approved: Project Director

Project Title: VA Durham Specialty Care Building 42

Location: Durham, North Carolina

Date	Checked	Drawn
04/28/2015	KMN	ERA

Project Number: 558-321

Building Number: 42

Drawing Number: R-901

Dwg. 1 of 1

Office of Construction and Facilities Management

Department of Veterans Affairs

VA FORM 08-6231