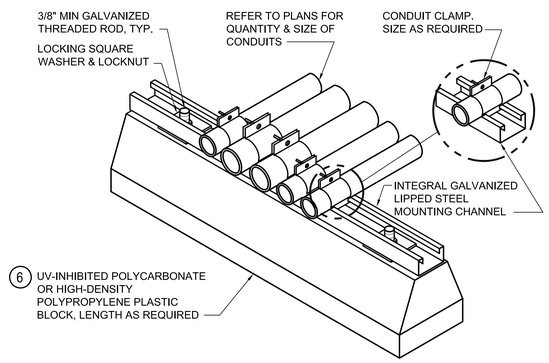

TYPICAL DETAIL: CONDUIT SUPPORT ON ROOF

NOT TO SCALE

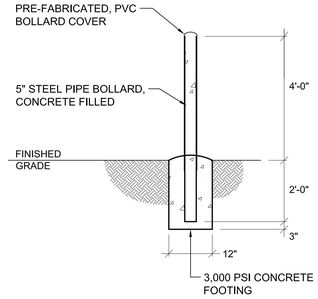

BOLLARD DETAIL

NOT TO SCALE

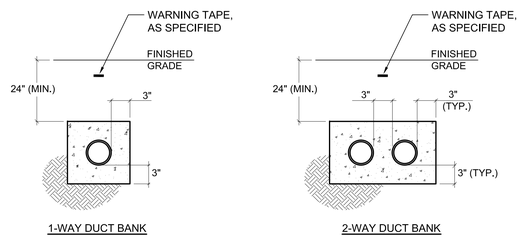

DUCT BANK DETAILS

NOT TO SCALE

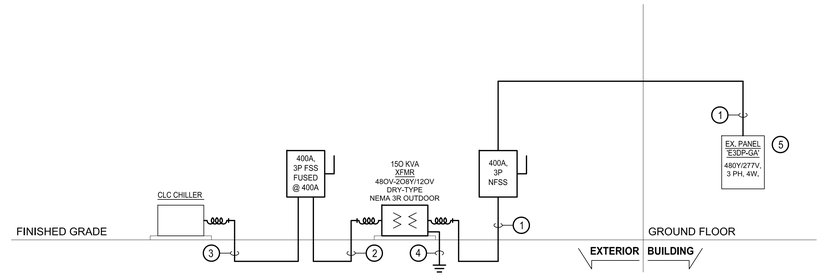

1 RISER DIAGRAM - ELECTRICAL - NEW WORK

SCALE: 1/8" = 1'-0"

GENERAL NOTES:

1. NEW FEEDER CIRCUIT FROM NEW 250A CIRCUIT BREAKER IN EXISTING PANEL E3DP-GA TO INPUT TERMINALS OF EXISTING CLC CHILLER SHALL BE INCLUDED IN ELECTRICAL SYSTEM PROTECTIVE DEVICE STUDY, AS SPECIFIED PER SECTION 26 05 71. ALL INFORMATION REQUIRED FOR COMPLETION OF STUDY, TO INCLUDE EXISTING ELECTRICAL SYSTEM INFORMATION, SHALL BE PROVIDED BY THE CONTRACTOR.

DRAWING NOTES:

1. 2-1/2" CONDUIT WITH 3-250kCM, #4 GND.
2. 3-1/2" CONDUIT WITH 3-500kCM, 1/0 AWG GND.
3. (2) 3" CONDUITS (1 SPARE) WITH 3-500kCM, #3 GND.
4. 1" CONDUIT WITH 1/0 AWG GND. TO NEW GROUND ROD AND EXISTING BUILDING GROUNDING ELECTRODE SYSTEM.
5. INSTALL NEW 250A MOLDED CASE CIRCUIT BREAKER IN EXISTING PANEL. PROVIDE 250AF, 250AT CIRCUIT BREAKER WITH LSI TYPE TRUE RMS SOLID-STATE ELECTRONIC TRIP UNIT. MATCH EXISTING PANEL MANUFACTURER, VOLTAGE, TYPE, AND AIC RATINGS. MODIFY DEAD-FRONT COVER OF EXISTING PANEL AS REQUIRED FOR NEW CIRCUIT BREAKER.
6. COOPER B-LINE DURA-BLOK OR EQUAL. SECURE TO ROOF USING COMPATIBLE ADHESIVE. SUBMIT SUPPORT AND ADHESIVE TO COTR AND OBTAIN WRITTEN APPROVAL PRIOR TO INSTALLING SUPPORTS. OBTAIN WRITTEN APPROVAL OF ADHESIVE FROM ROOF MANUFACTURER IF ROOF WARRANTY EXISTS. COORDINATE WITH COTR.

FULLY SPRINKLERED
AMENDMENT 1

PDG 110105.06

Additions:	Date:
Revisions:	

Consultants

BURDETTE KOEHLER MURPHY & ASSOCIATES, INC.
MECHANICAL / ELECTRICAL CONSULTING ENGINEERING
1423 CLARKVIEW ROAD, SUITE 500
BALTIMORE, MARYLAND 21209
410.323.0600 – FAX 410.377.2543

BUILDING COST CONSULTANTS
COST ESTIMATING
12917 – 30TH AVENUE
PLATTSMOUTH, NEBRASKA 68048
402.298.8260 – FAX 402.298.8290

Seal:

POLT DESIGN GROUP
ARCHITECTURE PLANNING ENGINEERING
1301 ENTERPRISE COURT, SUITE 103-C
410.803.2141
Bel Air, Maryland 21014
fax 410.838.1603
WEB SITE: http://www.polt-design.com

Drawing Scale:
Drawing Start Date:
Drawing Finish Date:
Drawing Approved:

Drawing Title: ELEC ONE-LINE DIAGRAMS & SCHEDULE – DEMO & NEW WORK

Approved: Associate Director for Operations:
Approved: Chief, Facilites Engineer:
Approved: Director, Medical Center:

Project Title: EMERGENCY POWER TO MAIN HOSPITAL ELEVATORS

Building No: 1
Checked: RAM
Drawn: JDS

Location: VAMHCS MEDICAL CENTER WILMINGTON, DELAWARE

Date: 8-29-2012
Project No: 460-12-123
DRAWING NO: AD-1-5
Dwg. 5 Of 5

DEPARTMENT OF VETERANS AFFAIRS

BKM# 070360.110