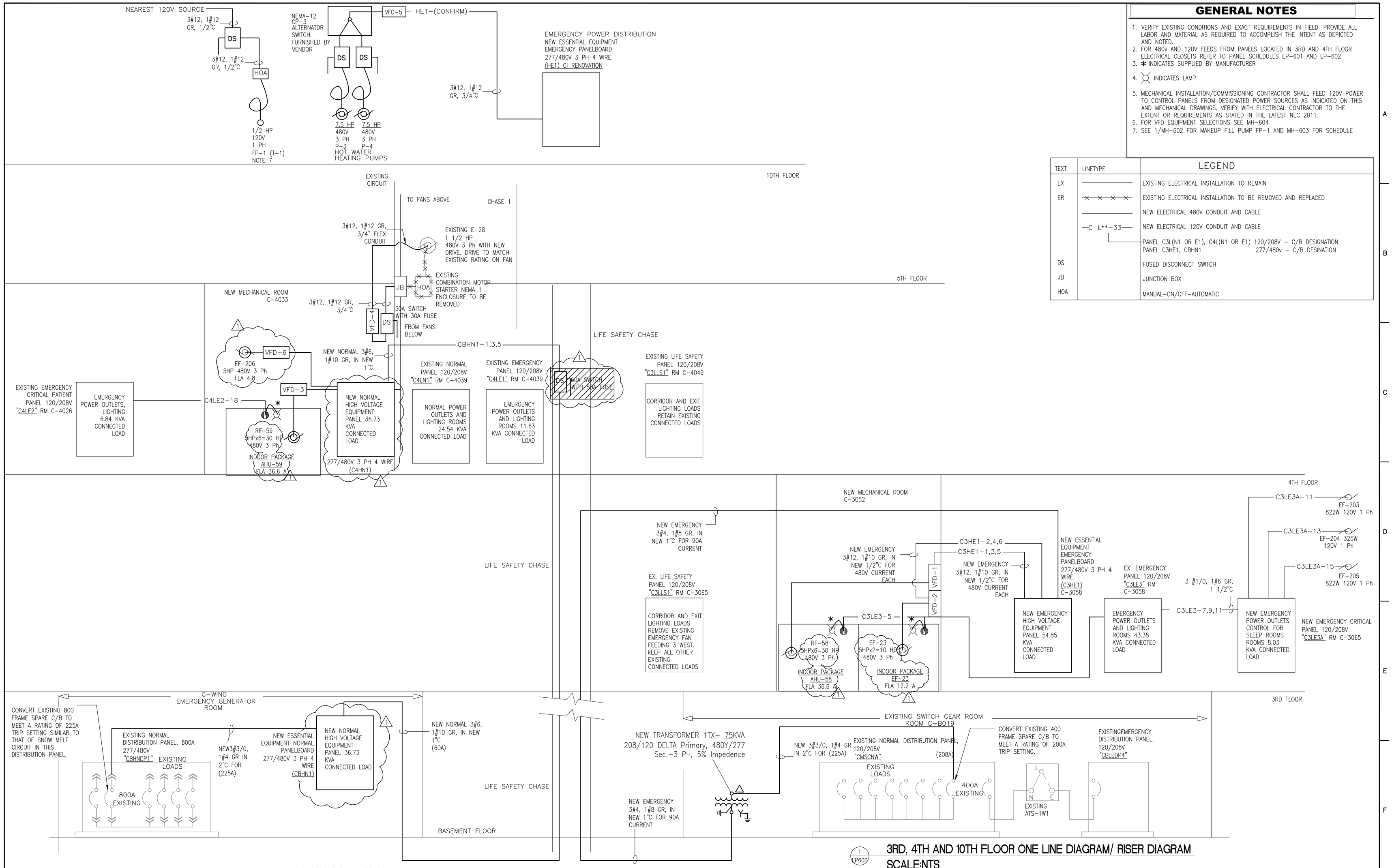

1 EP600 3RD, 4TH AND 10TH FLOOR ONE LINE DIAGRAM/ RISER DIAGRAM
SCALE:NTS

GENERAL NOTES

1. VERIFY EXISTING CONDITIONS AND EXACT REQUIREMENTS IN FIELD. PROVIDE ALL LABOR AND MATERIAL AS REQUIRED TO ACCOMPLISH THE INTENT AS DEPICTED AND NOTED.
2. FOR 480v AND 120V FEEDS FROM PANELS LOCATED IN 3RD AND 4TH FLOOR ELECTRICAL CLOSETS REFER TO PANEL SCHEDULES EP-601 AND EP-602
3. ✱ INDICATES SUPPLIED BY MANUFACTURER
4. INDICATES LAMP
5. MECHANICAL INSTALLATION/COMMISSIONING CONTRACTOR SHALL FEED 120V POWER TO CONTROL PANELS FROM DESIGNATED POWER SOURCES AS INDICATED ON THIS AND MECHANICAL DRAWINGS. VERIFY WITH ELECTRICAL CONTRACTOR TO THE EXTENT OR REQUIREMENTS AS STATED IN THE LATEST NEC 2011.
6. FOR VFD EQUIPMENT SELECTIONS SEE MH-604
7. SEE 1/MH-602 FOR MAKEUP FILL PUMP FP-1 AND MH-603 FOR SCHEDULE

LEGEND

TEXT	LINETYPE	
EX		EXISTING ELECTRICAL INSTALLATION TO REMAIN
ER		EXISTING ELECTRICAL INSTALLATION TO BE REMOVED AND REPLACED
		NEW ELECTRICAL 480V CONDUIT AND CABLE
	—C_L**-33—	NEW ELECTRICAL 120V CONDUIT AND CABLE
		PANEL C3L(N1 OR E1), C4L(N1 OR E1) 120/208V – C/B DESIGNATION PANEL C3HE1, CBHN1 277/480v – C/B DESINATION
DS		FUSED DISCONNECT SWITCH
JB		JUNCTION BOX
HOA		MANUAL-ON/OFF-AUTOMATIC

Revisions:	Date
65% SUBMITTAL SET	01.07.2012
95% SUBMITTAL SET	03.07.2012
BID DOCUMENTS SUBMITTAL SET	05.14.2012
REVISION - ADD EF-206 VFD-6 AND PANEL C4HN1	8-28-2012
REVISION - CHANGED EF-23, AHU-59, AND AHU-58 MOTOR	8-28-2012
REVISION - CHANGED CORRESPONDING WIRE SIZES	8-28-2012
REVISION - REMOVED DISCONNECT TO 4TH FLOOR	8-28-2012

Dept. of Veterans Affairs
Richard L. Roudebush
VA Medical Center
1481 W. 10th Street
Indianapolis, In 46202

CONSULTANTS:

BAYSINGER DESIGN GROUP
401 North Market Street
Marion, Illinois 62959
Telephone 618.998.8015
Fax 618.998.8032

CERTIFIED BY:

STATE OF MICHIGAN ASLAM MUKHTAR HUSAIN ENGINEER No. 6201035544 LICENSED PROFESSIONAL ENGINEER

ARCHITECT/ENGINEERS:

AMERICAN STRUCTUREPOINT INC
7260 Shadeland Station | Indianapolis, Indiana 46256
TEL 317.547.5580 | FAX 317.543.0270
www.structurepoint.com

EnerTronics ENERGY TO EXCEL
Engineering Corporation
The Fairmont Building
9245 Calumet Ave. Suite 205,
Munster, IN 46321
(219) 836-2120 Fax (219) 836-1129

Drawing Title: ELECTRICAL 3RD, 4TH AND 10TH FLOOR POWER ONE LINE SCHEMATIC AND RISER DIAGRAM

Project Title: RENOVATE FOR CLINICAL IMPROVEMENTS

Project Number: 583C16254
Building Number: 1
Drawing Number: EP-600
3FY12

PROJECT ENGINEER: Mary Piwowarski
Approved: Engineering Chief
Approved: Service Chief
Location: 3 WEST - C WING & 4 EAST - C WING
SCALE: 1/8"=1'-0"
Date: MAY 14, 2012
Checked: JS
Drawn: DS

BID DOCUMENTS

Engineering and Facilities Management Services
Department of Veterans Affairs

RLR VAMC FORM 09-JD0227

PLOT DATE: 6/27/2012 3:24 PM
CAD DRAWING FILE LOCATION: Z:\! PROJECTS\105 | CLINICAL IMPROVEMENTS INDIANAPOLIS VA\BID DOCUMENTS REVISIONS\EP-600.DWG

EXISTING PANEL C3LLS1 MODIFICATION
Specification 26 24 16

EXISTING PANEL C3LLS1, 120/208V, 3 PH, 4 WIRE, 225 A, COPPER BUS WITH 100A MAIN CIRCUIT BREAKER. BOLT ON CIRCUIT BREAKERS. SURFACE MOUNTED. MIN INTERRUPTED RATING: 22 KAISC, LOCATION: ROOM C-3050, NEMA 1 ENCLOSURE

Ckt No.	Room #	Ckt breaker rating/ Pole	Connected Load VA A	B	C	Ckt breaker rating/ Pole	Room #	Ckt No.
1	LTS. SOUTH	20/1	Note 1	-----	-----		EXISTING LOADS	
			Note 1		-----	20/1		2
3	LTS. WEST CENTER	20/1	-----	Note 1			EXISTING LOADS	
			-----	Note 1	-----	20/1		4
5	LTS. CENTER	20/1	-----		Note 1		SPARE	
			-----	-----	0	20/1		6
7	LTS. WEST CORR.	20/1	Note 1	-----	-----		SPARE	
			0		-----	20/1		8
9	LTS. EAST CORR. FR.	20/1	-----	Note 1				
				Note 1	-----	20/1	F.A. PANEL	10
11	EXISTING LIGHTING LOAD	20/1	-----		Note 1			
			-----	-----	Note 1	20/1	F.A. PANEL	12
13	EXISTING LOADS	20/1	Note 1	-----	-----		SPARE	
			0		-----	20/1		14
15	TSI C-WEST	20/1	-----	Note 1			SPARE	
				0	-----	20/1		16
17	SPARE	20/1	-----		0		SPARE	
			-----	-----	0	20/1		18
19	SPARE	20/1	0	-----	-----		SPARE	
			0		-----	20/1		20
21	SPARE	20/1	-----	0			SPARE	
				0	-----	20/1		22
23	SPARE	20/1	-----		0		SPARE	
			-----	-----	0	20/1		24
25	SPARE	20/1	0	-----	-----		SPARE	
			0		-----	20/1		26
27	SPARE	20/1	-----	0			SPARE	
				0	-----	20/1		28
29	SPARE	20/1	-----		0		SPARE	
			-----	-----	0	20/1		30
31	AHU-3 C-3115	30/3	Note 1	-----	-----		SPARE	
			0		-----	20/1		32
33			-----	Note 1			SPARE	
				0	-----	20/1		34
35			-----		Note 1		SPARE	
			-----	-----	0	20/1		36
37	SPARE	EXISTING	0	-----	-----	20/3	SPARE	
			0		-----			38
39			-----	0				
				0	-----			40
41			-----		0			
			-----	-----	0			42
			0	0	0			
				0				

PHASE A	0.00	KVA	TOTAL LOAD	0.00	KVA
PHASE B	0.00	KVA	TOTAL DEMAND		KVA
PHASE C	0.00	KVA	LOAD		

Note 1: 1) Retain existing feeds and loads
2) Contractor to perform a load study and test if new indicated circuit breaker fits in existing space

NEW PANEL C3LE3A
Specification 26 24 16

NEW EMERGENCY PANEL C3LE3A, 120/208V, 3 PH, 4 WIRE, 100 A, COPPER BUS WITH 100A MAIN CIRCUIT BREAKER. BOLT ON CIRCUIT BREAKERS. SURFACE MOUNTED. MIN INTERRUPTED RATING: 22 KAISC, LOCATION: ROOM C-3165, NEMA 1 ENCLOSURE

Ckt No.	Room #	Ckt breaker rating/ Pole	Connected Load VA A	B	C	Ckt breaker rating/ Pole	Room #	Ckt No.
1	RECP. FOR ROOMS C3161 NORTH WALL	20/1	300				RECP. FOR ROOM C3162 SOUTH WALL	
			300			20/1		2
3	RECP. FOR ROOM C3161 SOUTH WALL	20/1		800			RECP. FOR ROOM C3162 NORTH WALL, C3163	
				1000		20/1		4
5	RECP. FOR ROOMS C3159 SOUTH WALL AND C3160	20/1			1000		RECP. FOR ROOM C3164 NORTH WALL	
					800	20/1		6
7	RECP. FOR ROOM C3159 NORTH WALL	20/1	300				RECP. FOR ROOM C3164 SOUTH WALL	
			300			20/1		8
9	VAV BOX CONTROLLERS	20/1		200			ROOM C3190 EAST SECURITY GATE	
				864		20/1		10
11	EF-203	20/1			822			
					-----	20/1	SPARE	12
13	EF-204	20/1	325					
			-----			20/1	SPARE	14
15	EF-205	20/1		822				
				-----		20/1	SPARE	16
17	NURSES CALL	20/1			200			
					-----	20/1	SPARE	18
19	Main Breaker from C-3LE3	100/3P	-----			60/3P	TVSS - QOB-VH SPD SQD OR APPROVED EQUAL	
			-----					20
21				-----				
				-----				22
23					-----			
					-----			24
			1525	3686	2822			
				8033				

PHASE A	1.53	KVA	TOTAL LOAD	8.03	KVA
PHASE B	3.69	KVA	TOTAL DEMAND		KVA
PHASE C	2.82	KVA	LOAD		

LOW VOLTAGE TRANSFORMERS

TAG	LOCATION	EQUIPMENT SERVING	VOLTAGE	DESCRIPTION
1-TX	BASEMENT C-WING WEST SWITCHGEAR ROOM	POWER PANELS 480V PANEL C-3HE1 FOR HVAC EQUIPMENT	75KVA - 208Y/120VAC DELTA PRIMARY, 480V SECONDARY, 3 PHASE, 4 WIRE 60 HZ, 5% Impedance Copper Windings	ENERGY EFFICIENT GENERAL SERVICE, DRY TYPE, FLOOR MOUNTED, COPPER WINDINGS, TRANSFORMER SQUARE D EE75T212HCU OR APPROVED EQUAL

EXISTING PANEL C3LE3
Specification 26 24 16

EXISTING EMERGENCY PANEL C3LE3, 120/208V, 3 PH, 4 WIRE, 225 A, COPPER BUS. BOLT ON CIRCUIT BREAKERS. SURFACE MOUNTED. MIN INTERRUPTED RATING: 22 KAISC, LOCATION: ROOM C-3158, NEMA 1 ENCLOSURE

Ckt No.	Room #	Ckt breaker rating/ Pole	Connected Load VA A	B	C	Ckt breaker rating/ Pole	Room #	Ckt No.
1	LTS, ROOMS C3161,C3160, C3162, C3163, C3164, C3159	20/1	648				LTS ROOMS C3-13, C3165, C3166, C3167A, C3167, C3169, C3168, C3170, C3171, RECP ROOMS C-3170, C-3171	
			1637			20/1		2
3	LTS, ROOMS C3157, C3156, C3155, C3154. RECP. C3157, 3155	20/1		1108			LTS ROOMS C3-13A, C3172, C3173, C3175, C3177, C3178, C3180	
				704		20/1		4
5	LTS, ROOMS C3150/A, C3151, C3152, C3149, C3148, C3147, C3190, C3193, C3191 RECP. ROOM C3152 AND AHU RECP LTS	20/1			1295		LTS ROOMS, C3181, C3183, C3184, C3186, C3187, C3189	
					528	20/1		6
7	TO NEW PANEL C3LE3A LOCATED IN C-3165 FOR POWER CONTROL TO RECP. IN ROOMS C3159, C3160, C3161, C3162, C3163, C3164	NEW 30/3P	1525				RECP. ROOM C3165 REC1	
			300			20/1		8
9				3686			RECP. ROOM C3165 REC2	
				300		20/1		10
11					2822		RECP. ROOM C3165 REC3	
					300	20/1		12
13	RECP. ROOM C3165 REC4	20/1	300				RECP. ROOM C3156	
			800			20/1		14
15	RECP. ROOM C3154	20/1		800			RECP. ROOM C3166, C3165A	
				600		20/1		16
17	RECP. ROOM C3167 WEST AND NORTH	20/1			800		RECP. ROOM C3167 EAST AND NORTH, C-3169, C-3168	
					1200	20/1		18
19	RECP. CORRIDOR C3-13 WEST	20/1	800				RECP. ROOM C3172	
			1200			20/1		20
21	RECP. ROOM C3173	20/1		1200			RECP. ROOM C3175	
				1200		20/1		22
23	RECP. ROOM C3177	20/1			1200		RECP. ROOM C3178	
					1200	20/1		24
25	RECP. ROOM C3180	20/1	1200				RECP. ROOM C3181	
			1200			20/1		26
27	RECP. ROOM C3183	20/1		1200			RECP. ROOM C3184	
				1200		20/1		28
29	RECP. ROOM C3186	20/1			1200		RECP. ROOM C3187	
					1200	20/1		30
31	RECP. ROOM C3189	20/1	1200				RECP CORRIDOR C3-13A	
			800			20/1		32
33	RECP. ROOM C3191	20/1		600			RECP CORRIDOR C3-13 EAST	
				600		20/1		34
35	RECP ROOM C3150A	20/1			600		RECP ROOM C3150, C3151	
					800	20/1		36
37	RECP ROOMS C3193, C3190 WEST	20/1	600				RECP ROOM C3149	
			800			20/1		38
39	RECP ROOM C3190 EAST PLUS WAITING CHECK IN STATIONS	20/1		600			RECP ROOM C3147	
				800		20/1		40
41	RECP ROOMS C3148 (AC3 CONTROL PANELS)	20/1			600		EXAM LTS, ROOMS C3161,C3162, C3164, C3159	
					2000	30/1		42
			13010	14598	15745			
				43353				

PHASE A	13.01	KVA	TOTAL LOAD	43.35	KVA
PHASE B	14.60	KVA	TOTAL DEMAND		KVA
PHASE C	15.75	KVA	LOAD		

NEW PANEL C3HE1
Specification 26 24 16 (1)

NEW EMERGENCY EQUIPMENT DISTRIBUTION PANEL C3HE1, 277/480 VOLTS, 3 PH, 4 WIRE, 225 A, COPPER BUS WITH 90 A MAIN CIRCUIT BREAKER LUGS ONLY. BOLT ON CIRCUIT BREAKERS. SURFACE MOUNTED. MIN SHORT CIRCUIT RATING: 22 KAISC, LOCATION:ROOM C-3158, NEMA 1 ENCLOSU

Ckt No.	Room/Equipment #	Ckt breaker rating/	Connected Load VA A	B	C	Ckt breaker rating/ Pole	Room/Equipment #	Ckt No.
1	AHU-58 (6- 5 hp MOTORS) 6.1 FLA/Each VIA VFD-1	80/3	10138.2	-----	-----	20/3	EF-23 (2- 5 hp MOTORS) 6.1 FLA/Each VIA VFD-2	
			3379.4	-----	-----			2
3			-----	10138.2	-----			
			-----	3379.4	-----			4
5			-----	-----	10138.2			
			-----	-----	3379.4			6
7								
								8
9								
								10
11								
								12
13								
								14
15								
								16
17								
								18
			13517.6	13517.6	13517.6			
				40552.8				

PHASE A	13.52	KVA	TOTAL LOAD	40.55	KVA
PHASE B	13.52	KVA	TOTAL DEMAND		KVA
PHASE C	13.52	KVA	LOAD		

TAG	EQUIPMENT DEVICES	SPECIFICATION	APPROVED MANUFACTURER
EXISTING PANELS	120v PANELBOARD	26 24 16	SQUARE D NQ
NEW PANEL C3LE3A	120v PANELBOARD	26 24 16	SQUARE D NQ
DS	DISCONNECT SWITCHES	26 29 21	SIEMENS, SQUARE D
EO	ELECTRICAL OUTLETS	26 27 26	LEVITON, PASS & SEYMOUR, HUBBELL
	ELECTRICAL LIGHTING SWITCHES	26 27 26	LEVITON, PASS & SEYMOUR, HUBBELL
D,TD	COMMUNICATION DATA OUTLETS	27 05 11	LEVITON, PASS & SEYMOUR, HUBBELL
EO	ELECTRICAL COVER PLATES	26 27 26	LEVITON, PASS & SEYMOUR, HUBBELL
	FIRE ALARM COMPONENTS	28 31 00	MATCH EXISTING

Revisions	Date
65% SUBMITTAL SET	01.07.2012
95% SUBMITTAL SET	03.07.2012
BID DOCUMENTS SUBMITTAL SET	05.14.2012
REVISION - MODIFIED PANEL C3HE1	8-28-2012

Dept. of Veterans Affairs
Richard L. Roudebush
VA Medical Center
1481 W. 10th Street
Indianapolis, In 46202

CONSULTANTS:
BAYSINGER DESIGN GROUP
401 North Market Street
Marion, Illinois 62959
Telephone 618.998.8015
Fax 618.998.8032

CERTIFIED BY:
STATE OF MICHIGAN ASLAM MUKHTAR HUSAIN ENGINEER No. 6201035544 LICENSED PROFESSIONAL ENGINEER

ARCHITECT/ENGINEERS:
AMERICAN STRUCTUREPOINT INC.
7260 Shadeland Station | Indianapolis, Indiana 46256
TEL 317.547.5580 | FAX 317.543.0270
www.structurepoint.com

EnerTronics ENERGY TO EXCEL
Engineering Corporation
The Fairmont Building
9245 Calumet Ave. Suite 205,
Munster, IN 46321
(219) 836-2120 Fax (219) 836-1129

Drawing Title: ELECTRICAL 3RD FLOOR POWER PANEL BOARD AND EQUIPMENT SCHEDULES
Project Title: RENOVATE FOR CLINICAL IMPROVEMENTS
Project Number: 583C16254
Building Number: 1
PROJECT ENGINEER: Mary Piwowarski
Approved: Engineering Chief
Location: 3 WEST - C WING & 4 EAST - C WING
Drawing Number: EP-601
SCALE: 1/8"=1'-0"
Approved: Service Chief
Date: MAY 14, 2012
Checked: JS
Drawn: DS
3FY12

BID DOCUMENTS

Engineering and Facilities Management Services
Department of Veterans Affairs

RLR VAMC FORM 09-JD0227

PLOT DATE: 8/27/2012 3:23 PM
CAD DRAWING FILE LOCATION: Z:\I PROJECTS\105 CLINICAL IMPROVEMENTS INDIANAPOLIS VA\BID DOCUMENTS REVISIONS\EP-601.DWG

EXISTING PANEL C4LE2
Specification 26 24 16

EXISTING EMERGENCY PANEL C4LE2, 120/208V, 3 PH, 4 WIRE, 225 A, COPPER BUS WITH 225A MAIN CIRCUIT BREAKER. BOLT ON CIRCUIT BREAKERS. SURFACE MOUNTED. MIN INTERRUPTED RATING: 22 KAISC, LOCATION: ROOM C-4026, NEMA 1 ENCLOSURE

Ckt No.	Room #	Ckt breaker rating/ Pole	Connected Load VA A	Connected Load VA B	Connected Load VA C	Ckt breaker rating/ Pole	Room #	Ckt No.
1	LTS, ROOMS C4014, C4015, C4016, C4017,	20/1	392			20/1	LTS ROOMS, C4022, 4023, 4024, 4025, 4027	2
			220					
3	RECP. ROOM C4016 WEST	20/1		600		20/1	RECP. ROOM C4016 EAST	4
				800				
5	RECP. ROOM C4017	20/1			400	20/1	RECP. ROOM C4018	6
					400			
7	RECP. ROOM C4019	20/1	400			20/1	RECP. ROOM C4020	8
			400					
9	RECP. ROOM C4022	20/1		400		20/1	RECP. ROOM C4023	10
				400				
11	RECP. ROOM C4024	20/1			400	20/1	RECP. ROOM C4027 EAST	12
					800			
13	RECP. ROOM C4027 WEST	20/1	800			20/1	VAV BOXES CONTROLLERS	14
			200					
15	SPARE	20/1		0		20/1	SPARE	16
				0				
17	SPARE	20/1			0	20/1	AHU-4 LTS AND RECP.	18
					230			
19	SPARE	20/1	-----			20/1	SPARE	20

21	SPARE	20/1		-----		20/1	SPARE	22

23	SPARE	20/1			-----	20/1	SPARE	24

25	SPARE	20/1	-----			20/1	SPARE	26

27	SPARE	20/1		-----		20/1	SPARE	28

29	SPARE	20/1			-----	20/1	SPARE	30

31	SPARE	20/1	-----			20/1	SPARE	32

33	SPARE	20/1		-----		20/1	SPARE	34

35	SPARE	20/1			-----	20/1	SPARE	36

37	SPARE	20/1	-----			20/1	SPARE	38

39	SPARE	20/1		-----		20/1	SPARE	40

41	BLANK	20/1			-----	20/1	BLANK	42

			2412	2200	2230			
				6842				
PHASE A	2.41	KVA	TOTAL LOAD		6.84	KVA		
PHASE B	2.20	KVA	TOTAL DEMAND			KVA		
PHASE C	2.23	KVA	LOAD					

NEW PANEL C4HN1
Specification 26 24 16

1

NEW NORMAL EQUIPMENT DISTRIBUTION PANEL C4HN1, 277/480 VOLTS, 3 PH, 4 WIRE, 225 A, COPPER BUS WITH 90 A MAIN CIRCUIT BREAKER LUGS ONLY. BOLT ON CIRCUIT BREAKERS. SURFACE MOUNTED. MIN SHORT CIRCUIT RATING: 22 KAISC, LOCATION:ROOM C-4033, NEMA 1 ENCLOSURE

Ckt No.	Room/Equipment #	Ckt breaker rating/	Connected Load VA A	Connected Load VA B	Connected Load VA C	Ckt breaker rating/ Pole	Room/Equipment #	Ckt No.
1	AHU-58 (6- 5 hp MOTORS) 30 HP 6.1 FLA/Each VIA VFD-3	80/3	10138.2	-----	-----	15/3	EF-206 (5 hp MOTORS) 7.6 FLA VIA VFD-6	2
			2105.2	-----	-----			
3			-----	10138.2	-----			4
			-----	2105.2	-----			
5			-----	-----	10138.2			6
			-----	-----	2105.2			
7								8
9								10
11								12
			12243.4	12243.4	12243.4			
				36730.2				
PHASE A	12.24	KVA	TOTAL LOAD		36.73	KVA		
PHASE B	12.24	KVA	TOTAL DEMAND			KVA		
PHASE C	12.24	KVA	LOAD					

65% SUBMITTAL SET	01.07.2012	
95% SUBMITTAL SET	03.07.2012	
BID DOCUMENTS SUBMITTAL SET	05.14.2012	
REVISION - MODIFIED PANEL CBHN1	8-28-2012	
REVISION - ADDED PANEL C4HN1	8-28-2012	
Revisions:	Date	

Dept. of Veterans Affairs
Richard L. Roudebush
VA Medical Center
1481 W. 10th Street
Indianapolis, In 46202

EXISTING PANEL C4LE1
Specification 26 24 16

EXISTING EMERGENCY PANEL C4LE1, 120/208V, 3 PH, 4 WIRE, 225 A, COPPER BUS WITH 225A MAIN CIRCUIT BREAKER. BOLT ON CIRCUIT BREAKERS. SURFACE MOUNTED. MIN INTERRUPTED RATING: 22 KAISC, LOCATION: ROOM C-4026, NEMA 1 ENCLOSURE

Ckt No.	Room #	Ckt breaker rating/ Pole	Connected Load VA A	Connected Load VA B	Connected Load VA C	Ckt breaker rating/ Pole	Room #	Ckt No.
1	LTS, ROOMS C4001, C4003, C4005, C4007, C4007A, C4008, C4008A, C4009, C4009A	20/1	524			20/1	LTS ROOMS, C4033, C4035, C4036, C4037	2
			220					
3	RECP. ROOM C4003	20/1		600		20/1	RECP. ROOMS C-4004, C-4006	4
				400				
5	RECP. ROOM C-4037	20/1			400	20/1	RECP. ROOM C-4036	6
					400			
7	RECP. ROOM C-4035 WEST	20/1	600			20/1	RECP. ROOM C-4035 EAST PLUS MINIFRIDGE	8
			556					
9	RECP ROOM C4007	20/1		400		20/1	RECP ROOM C4007A	10
				400				
11	RECP ROOM C4008	20/1			400	20/1	RECP ROOM C4008A	12
					400			
13	RECP ROOM C4009	20/1	400			20/1	RECP ROOM C4009A	14
			400					
15	RECP ROOM C4010	20/1		400		20/1	RECP ROOM C4010A	16
				400				
17	RECP ROOM C4011	20/1			400	20/1	RECP ROOM C4011A	18
					400			
19	RECP CORRIDOR C4-34 (CRASH CART)	20/1	200			20/1	RECP ROOM C4012 NORTH	20
			800					
21	RECP ROOM C4012 SOUTH	20/1		800		20/1	VAVC BOX CONTROLLERS	22
				200				
23	NURSES CALL	20/1			200	20/1	ROOM C4003 EAST SECURITY GATE 1	24
					864			
25	ROOM C4003 EAST SECURITY GATE 2	20/1	864			20/1	SPARE	26

27	SPARE	20/1		-----		20/1	SPARE	28

29	SPARE	20/1			-----	20/1	SPARE	30

31	SPARE	20/1	-----			20/1	SPARE	32

33	SPARE	20/1		-----		20/1	SPARE	34

35	SPARE	20/1			-----	20/1	SPARE	36

37	SPARE	20/1	-----			20/1	SPARE	38

39	SPARE	20/1		-----		20/1	SPARE	40

41	BLANK	20/1			-----	20/1	BLANK	42

			4564	3600	3464			
				11628				
PHASE A	4.56	KVA	TOTAL LOAD		11.63	KVA		
PHASE B	3.60	KVA	TOTAL DEMAND			KVA		
PHASE C	3.46	KVA	LOAD					

TAG	EQUIPMENT DEVICES	SPECIFICATION	APPROVED MANUFACTURER
EXISTING	480v AND 120v PANELBOARD	26 24 16	SQUARE D NQ-
PANELS			SQUARE D NQ
DS	DISCONNECT SWITCHES	26 29 21	SIEMENS, SQUARE D
EO	ELECTRICAL OUTLETS	26 27 26	LEVITON, PASS & SEYMOUR, HUBBELL
	ELECTRICAL LIGHTING SWITCHES	26 27 26	LEVITON, PASS & SEYMOUR, HUBBELL
D,TD	COMMUNICATION DATA OUTLETS	27 05 11	LEVITON, PASS & SEYMOUR, HUBBELL
EO	ELECTRICAL COVER PLATES	26 27 26	LEVITON, PASS & SEYMOUR, HUBBELL
	FIRE ALARM COMPONENTS	28 31 00	MATCH EXISTING

EXISTING PANEL C4LN1
Specification 26 24 16

EXISTING NORMAL PANEL C4LN1, 120/208V, 3 PH, 4 WIRE, 225 A, COPPER BUS WITH 225A MAIN CIRCUIT BREAKER. BOLT ON CIRCUIT BREAKERS. SURFACE MOUNTED. MIN INTERRUPTED RATING: 22 KAISC, LOCATION: ROOM C-4026, NEMA 1 ENCLOSURE

Ckt No.	Room #	Ckt breaker rating/ Pole	Connected Load VA A	Connected Load VA B	Connected Load VA C	Ckt breaker rating/ Pole	Room #	Ckt No.
1	LTS, ROOMS C4001, C4003, C4004, C4006	20/1	632			20/1	LTS ROOMS CORRIDOR C4-35, C4-34, C4-36	2
			440					
3	LTS ROOMS C4007, C4007A, C4008, C4008A, C4009,	20/1		264		20/1	LTS ROOMS C4010, C4010A, C4011, C4011A, C4012	4
				308				
5	LTS, ROOMS C4014, C4015, C4016, C4017, C4018, C4019, C4020, C4021, C4021A	20/1			528	20/1	LTS ROOMS, C4022, 4023, 4024, 4025, 4027	6
					440			
7	LTS ROOMS, C4034, C4035, C4036, C4037	20/1	352			20/1	RECP. ROOM 4001, 4002	8
			600					
9	RECP. ROOM 4001 NORTH WALL WEST	20/1		600		20/1	RECP. ROOM 4001 NORTH WALL EAST	10
				800				
11	RECP. ROOM 4001 SOUTH WALL EAST, EXISTING CORRIDOR	20/1			600	20/1	RECP. COORIDOR C4-34 EAST	12
					600			
13	RECP. ROOM 4003, 4005	20/1	600			20/1	RECP. ROOM C-4037	14
			600					
15	RECP. ROOM C-4036	20/1		600		20/1	RECP. ROOM C-4035	16
				400				
17	RECP ROOM C4007	20/1			600	20/1	RECP ROOM C4007A	18
					600			
19	RECP ROOM C4008	20/1	600			20/1	RECP ROOM C4008A	20
			600					
21	RECP ROOM C4009	20/1		600		20/1	RECP ROOM C4009A	22
				600				
23	RECP ROOM C4010	20/1			600	20/1	RECP ROOM C4010A	24
					600			
25	RECP ROOM C4011	20/1	600			20/1	RECP ROOM C4011A	26
			600					
27	RECP. CORRIDOR C4-35 NORTH	20/1		400		20/1	RECP. CORRIDOR C4-35 SOUTH	28
				200				
29	RECP. ROOMS C-4034, C-4033	20/1			200	20/1	RECP. ROOMS C-4013, C-4014,C-4015	30
					600			
31	RECP. ROOM C-4017	20/1	600			20/1	RECP. ROOM C-4018	32
			600					
33	RECP. ROOM C-4019	20/1		600		20/1	RECP. ROOM C-4020, C-4020A	34
				800				
34	RECP. ROOM C-4021, C4021A	20/1			800	20/1	RECP. ROOM C4-201 REF.	36
					1200			
37	RECP. ROOM C-4022	20/1	600			20/1	RECP. ROOM C4-201 MICROWAVE	38
			1200					
39	RECP. ROOM C-4023	20/1		600		20/1	RECP. ROOM C-4024, C-4025	40
				800				
41	RECP. CORRIDOR C4-36	20/1			400	20/1	RECP. CORRIDOR C4-35 EAST	42
					600			
			8624	7572	8368			
				24564				
PHASE A	8.62	KVA	TOTAL LOAD		24.56	KVA		
PHASE B	7.57	KVA	TOTAL DEMAND			KVA		
PHASE C	8.37	KVA	LOAD					

EXISTING PANEL C4LLS1
Specification 26 24 16

EXISTING PANEL C4LLS1, 120/208V, 3 PH, 4 WIRE, 225 A, COPPER BUS WITH 100A MAIN CIRCUIT BREAKER. BOLT ON CIRCUIT BREAKERS. SURFACE MOUNTED. MIN INTERRUPTED RATING: 22 KAISC, LOCATION: ROOM C-4050, NEMA 1 ENCLOSURE

Ckt No.	Room #	Ckt breaker rating/ Pole	Connected Load VA A	Connected Load VA B	Connected Load VA C	Ckt breaker rating/ Pole	Room #	Ckt No.
1	LTS. EAST CORR.	20/1	????	-----	-----	20/1	LTS. SOUTH CORR.	2
			Note 1	-----	-----			
3	LTS. WEST CORR.	20/1	-----	Note 1	-----	20/1	LTS. RECPTS, A-842	4
			-----	Note 1	-----			
5	LTS. FR. ELEV. MAIN	20/1	-----	-----	Note 1	20/1	LTS. RECPTS, A-841	6
			-----	-----	Note 1			
7	SPARE	20/1	-----	-----	-----	20/1	KEYPAD FOR MENTAL HEALTH	8
			Note 1	-----	-----			
9	SPARE	20/1	-----	-----	-----	20/1	F.A. PANEL	10
			-----	Note 1	-----			
11	SPARE	20/1	-----	-----	-----	20/1	SPARE	12
			-----	-----	-----			
13	SPARE	20/1	-----	-----	-----	20/1	SPARE	14
			-----	-----	-----			
15	SPARE	20/1	-----	-----	-----	20/1	SPARE	16
			-----	-----	-----			
17	SPARE	20/1	-----	-----	-----	20/1	SPARE	18
			-----	-----	-----			
19	SPARE	20/1	-----	-----	-----	20/1	SPARE	20
			-----	-----	-----			
21	SPARE	20/1	-----	-----	-----	20/1	SPARE	22
			-----	-----	-----			
23	SPARE	20/1	-----	-----	-----	20/1	SPARE	24
			-----	-----	-----			
25	SPARE	20/1	-----	-----	-----	20/1	SPARE	26
			-----	-----	-----			
27	SPARE	20/1	-----	-----	-----	20/1	SPARE	28
			-----	-----	-----			
29	SPARE	20/1	-----	-----	-----	20/1	SPARE	30
			-----	-----	-----			
31	SPARE	20/1	-----	-----	-----	20/1	SPARE	32
			-----	-----	Note 1			
33	SPARE	20/1	-----	-----	-----	20/1	SPARE	34
			-----	-----	-----			
35	SPARE	20/1	-----	-----	-----	20/1	SPARE	36
			-----	-----	-----			
37	SPARE	20/1	-----	-----	-----	20/1	SPARE	38
			-----	-----	-----			
39	SPARE	20/1	-----	-----	-----	20/1	SPARE	40
			-----	-----	-----			
41	SPARE	20/1	-----	-----	-----	20/1	BLANK	42
			-----	-----	-----			
			0	0	0			
				0				
PHASE A	0	KVA	TOTAL LOAD		0.00	KVA		
PHASE B	0	KVA	TOTAL DEMAND			KVA		
PHASE C	0.00	KVA	LOAD					

Note 1: Retain existing feeds and loads

NEW PANEL CBHN1
Specification 26 24 16

1

NEW NORMAL EQUIPMENT DISTRIBUTION PANEL CBHN1, 277/480 VOLTS, 3 PH, 4 WIRE, 225 A, COPPER BUS WITH 225 A MAIN CIRCUIT BREAKER LUGS ONLY. BOLT ON CIRCUIT BREAKERS. SURFACE MOUNTED. MIN SHORT CIRCUIT RATING: 22 KAISC, LOCATION:ROOM C-10001, NEMA 1 ENCLOSUR

Ckt No.	Room/Equipment #	Ckt breaker rating/	Connected Load VA A	Connected Load VA B	Connected Load VA C	Ckt breaker rating/ Pole	Room/Equipment #	Ckt No.
1	FEED TO PANEL C4HN1 (HVAC EQUIPMENT)	80/3	12243.4	-----	-----	--	SPARE	2
			0	-----	-----			
3			-----	12243.4	-----			4
			-----	0	-----			
5			-----	-----	12243.4			6
			-----	-----	0			
7								8
9								10
11								12
13								14
15								16
17								18
			12243.4	12243.4	12243.4			
				36730.2				
PHASE A	12.2434	KVA	TOTAL LOAD		36.73	KVA		
PHASE B	12.2434	KVA	TOTAL DEMAND			KVA		
PHASE C	12.24	KVA	LOAD					

BID DOCUMENTS

CONSULTANTS:

BAYSINGER DESIGN GROUP
401 North Market Street
Marion, Illinois 62959
Telephone 618.998.8015
Fax 618.998.8032

CERTIFIED BY:

STATE OF MICHIGAN
ASLAM MUKHTAR HUSAIN
ENGINEER No. 6201035544
LICENSED PROFESSIONAL ENGINEER

ARCHITECT/ENGINEERS:

AMERICAN STRUCTUREPOINT INC.
7260 Shadeland Station | Indianapolis, Indiana 46256
TEL 317.547.5580 | FAX 317.543.0270
www.structurepoint.com

EnerTronics ENERGY TO EXCEL
Engineering Corporation
The Fairmont Building
9245 Calumet Ave. Suite 205,
Munster, IN 46321
(219) 836-2120 Fax (219) 836-1129

Drawing Title: ELECTRICAL 4TH FLOOR POWER PANEL BOARD AND EQUIPMENT SCHEDULES

Project Title: RENOVATE FOR CLINICAL IMPROVEMENTS

Project Number: 583C16254
Building Number: 1
Drawing Number: EP-602
3FY12

PROJECT ENGINEER: Mary Piwowarski
Approved Engineering Chief:
Approved Service Chief:
Location: 3 WEST - C WING & 4 EAST - C WING
SCALE: 1/8"= 1'-0"
Date: MAY 24, 2012
Checked: JS
Drawn: DS

Engineering and Facilities Management Services
Department of Veterans Affairs

RLR VAMC FORM 09-JD0227

PLOT DATE: 5/27/2012 3:23 PM
CAD DRAWING FILE LOCATION: Z:\1 PROJECTS\1051 CLINICAL IMPROVEMENTS INDIANAPOLIS VA\BID DOCUMENTS REVISION\EP-602.DWG

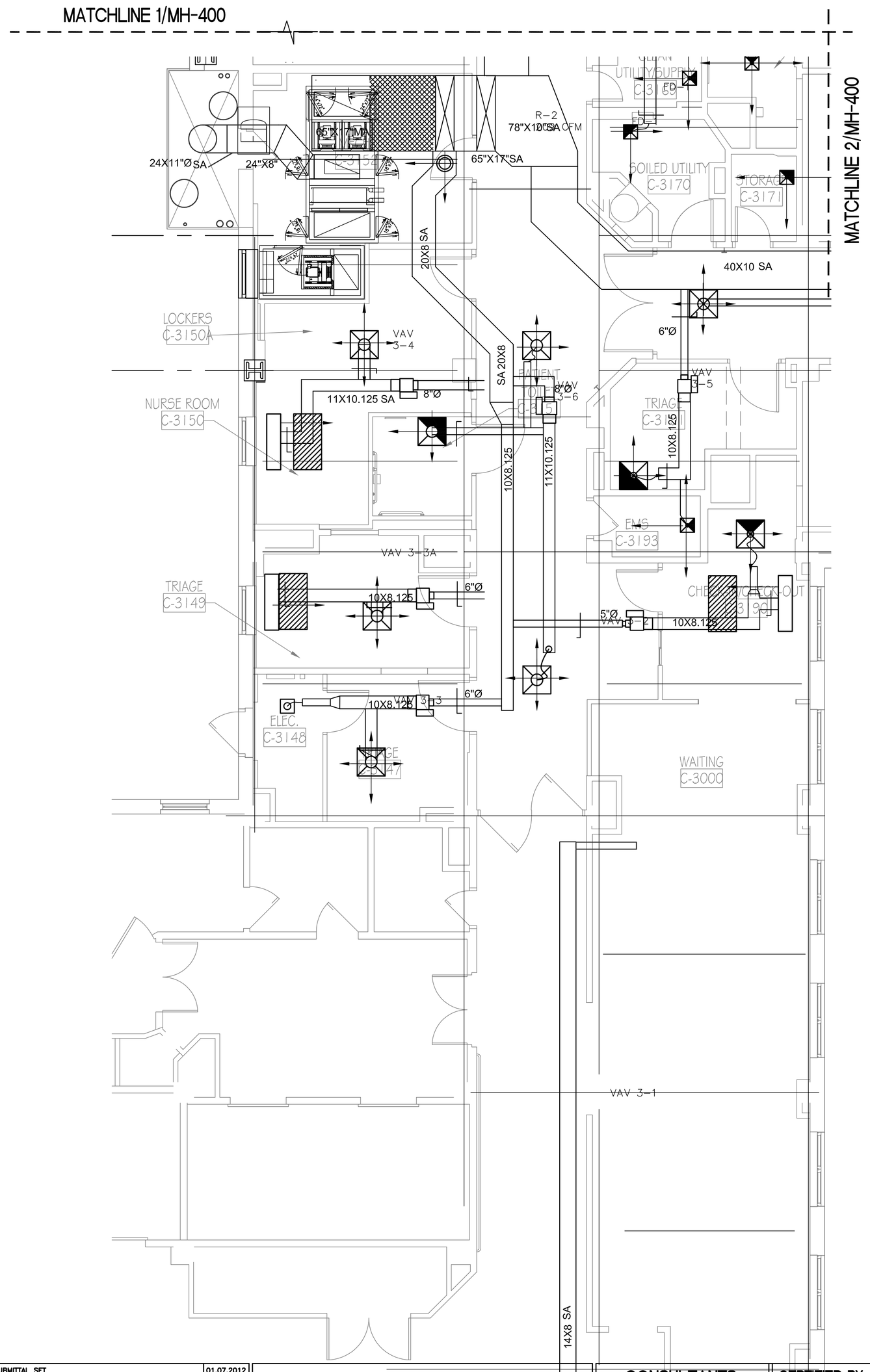

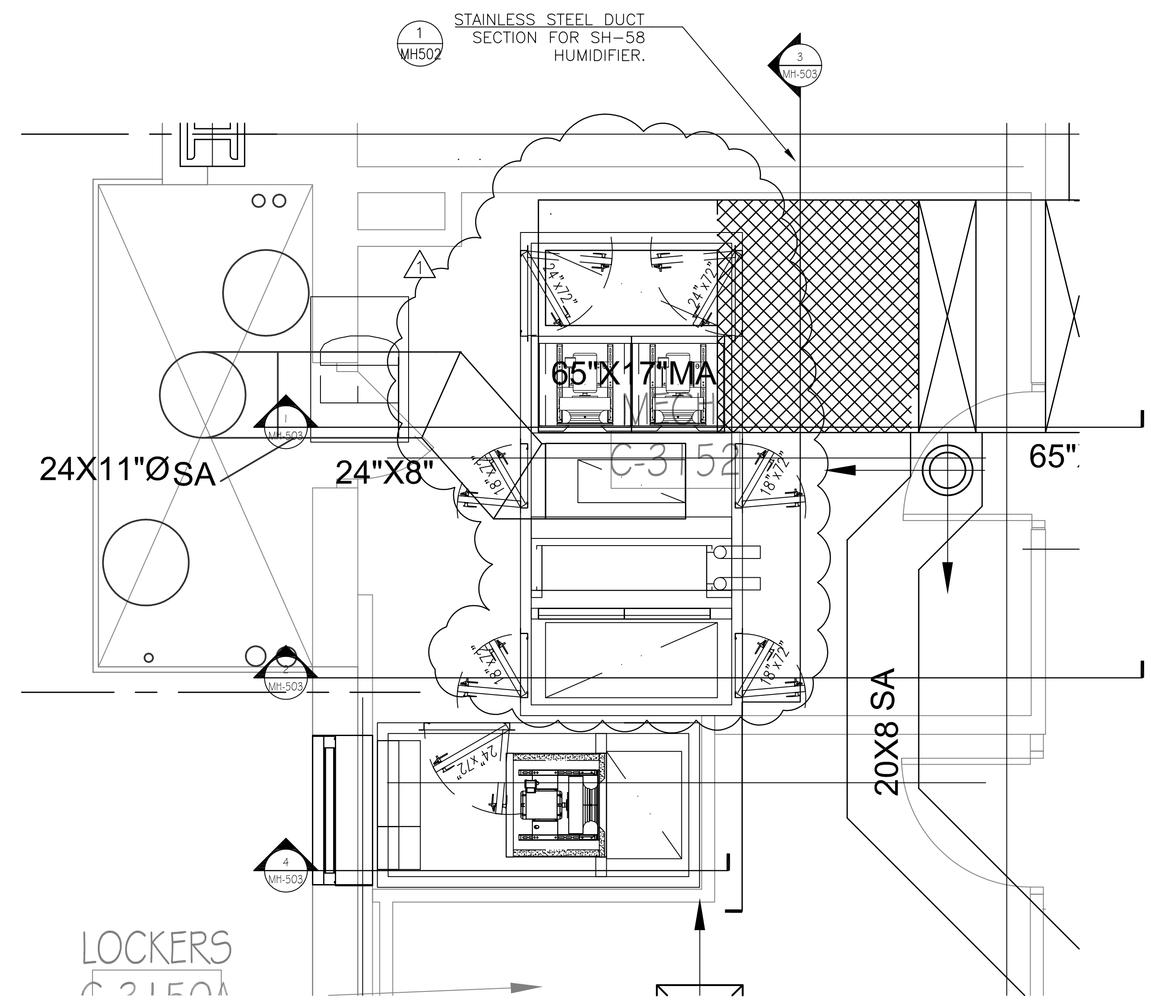

2 MH401 ENLARGED MECHANICAL ROOM PLAN
SCALE: 1/2" = 1'-0"

1 MH401 PARTIAL 3RD FLOOR ENLARGED HVAC FLOOR PLAN
SCALE: 1/4" = 1'-0"

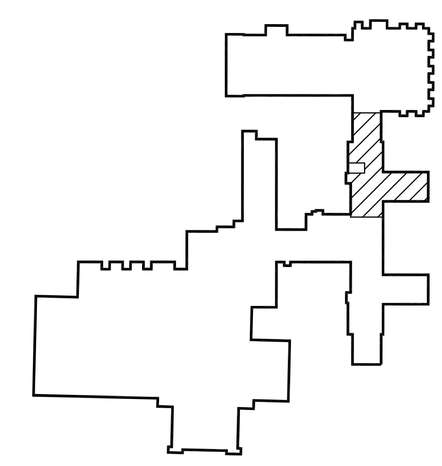

3RD FLOOR KEY PLAN
NO SCALE

NOTES

1. THE CONTRACTOR SHALL BE RESPONSIBLE TO VISUALLY IDENTIFY INTERFERENCES AND TO MAKE NECESSARY ADJUSTMENTS IN THE FIELD.
2. THE DIAGRAM IS INTENDED TO SHOW THOSE ITEMS THAT ARE NEEDED PER DESIGN REQUIREMENTS AND DOES NOT REFLECT ANY ADDITIONAL ITEMS BOTH PHYSICALLY AND CONSTRUCTION CONDITIONS.
3. MECHANICAL CONTRACTOR SHALL BE RESPONSIBLE TO WORK WITH OTHER SYSTEMS (i.e. ELECTRICAL, PLUMBING, FIRE PROTECTION AND COMMUNICATIONS) AND TO IDENTIFY DISCREPANCIES AND BRING THEM TO THE ATTENTION OF THE DEPARTMENT OF VETERANS AFFAIRS (V.A.) REPRESENTATIVES AS SOON AS POSSIBLE DURING BIDDING TO OBTAIN GUIDANCE. THIS SHALL NOT ALLEVIATE THE CONTRACTOR OF THE RESPONSIBILITY TO PROVIDE A FULLY FUNCTIONING SYSTEM.
4. CFM ROOM VALUES ARE TAKING ACCOUNT 20% FACTOR
5. VAV-# SHOWN ON THE LAYOUT IS REPRESENTIVE TO THE ZONE NUMBER ON THE HVAC ROOM BALANCING TABLE TO VAV TERMINAL UNITS WITH REHEAT COILS. SEE DRAWING MH-603 FOR VAV SCHEDULE.
6. CONTRACTOR SHALL INTITIALLY SET THE BALANCING DAMPER TO ACHIEVE RATED FLOW RATE WITH THE FOLLOWING TOLERANCE:
   + 0
   − 10%
7. HEATING AND COOLING VARIATIONS SHALL BE TAKEN TO LOCALLY ADJUST THE CFM UPWARDS.

DETAIL REFERENCE

- 5 / MH-500 — VAV #-#
- 6 / MH-500 — DUCT CROSSOVER
- 7 / MH-501, 5 / MH-501, 4 / MH-501, 3 / MH-501, 2 / MH-501 — DUCT CONSTRUCTION DETAILS
- 1 / MH-502 — HUMIDIFIER DUCT SECTION
- 3 / MH-500, 6 / MH-500, 2 / MH-500 — DIFFUSER, REGISTERS, AND EXHAUST GRILLS

REVISION NOTES

1. THE DRAWING ARRANGEMENT SHOWN IN DETAIL 2 SUPERSIDES ARRANGEMENTS SHOWN ELSEWHERE IN OTHER DRAWING PLAN ARRANGEMENTS(OVERALL AND MECHANICAL PLUMBING). THOSE SHOULD BE USE FOR REFERENCE ONLY. CHANGES SHOWN TO AHU-58 PERTAIN TO THE ARRANGEMENT OF THE AIR HANDLING UNIT SECTIONS AND INCLUDE AN OUTSIDE AIR CONNECTION TO THE UNIT.

Revisions:	Date
65% SUBMITTAL SET	01.07.2012
95% SUBMITTAL SET	03.07.2012
BID DOCUMENTS SUBMITTAL SET	05.14.2012
REVISION - CORRECTED AHU-58 ARRANGEMENT	8-28-2012

Dept. of Veterans Affairs
Richard L. Roudebush
VA Medical Center
1481 W. 10th Street
Indianapolis, In 46202

CONSULTANTS:

BAYSINGER DESIGN GROUP
401 North Market Street
Marion, Illinois 62959
Telephone 618.998.8015
Fax 618.998.8032

CERTIFIED BY:

STATE OF MICHIGAN
ASLAM MUKHTAR HUSAIN
ENGINEER
No. 6201035544
REGISTERED PROFESSIONAL ENGINEER

ARCHITECT/ENGINEERS:

AMERICAN STRUCTUREPOINT INC.
7260 Shadeland Station | Indianapolis, Indiana 46256
TEL 317.547.5580 | FAX 317.543.0270
www.structurepoint.com

EnerTronics ENERGY TO EXCEL
Engineering Corporation
The Fairmont Building
9245 Calumet Ave. Suite 205,
Munster, IN 46321
(219) 836-2120 Fax (219) 836-1129

Drawing Title: 3RD FLOOR ENLARGED MECHANICAL FLOOR PLANS SHEET 2 OF 4		Project Title: RENOVATE FOR CLINICAL IMPROVEMENTS	Project Number: 583C16254
			Building Number: 1
PROJECT ENGINEER: Mary Piwowarski	Approved: Engineering Chief	Location: 3 WEST - C WING & 4 EAST - C WING	Drawing Number: MH-401
SCALE: 1/8"= 1'-0"	Approved: Service Chief	Date: MAY 14, 2012 / Checked: DR / Drawn: DS	3FY12

BID DOCUMENTS

Engineering and Facilities Management Services

Department of Veterans Affairs

RLR VAMC FORM 09-JD0227

MATCHLINE 1/MH-400

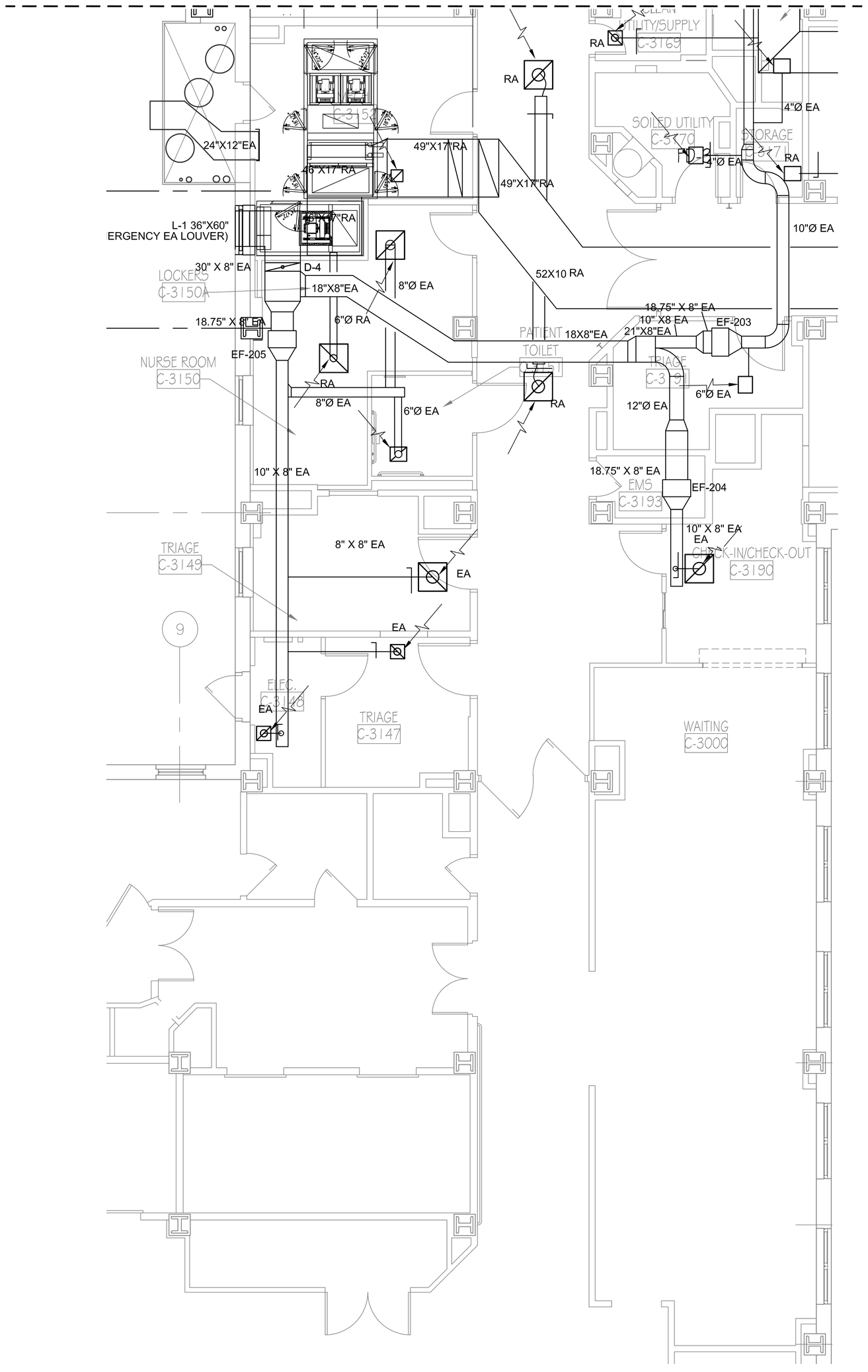

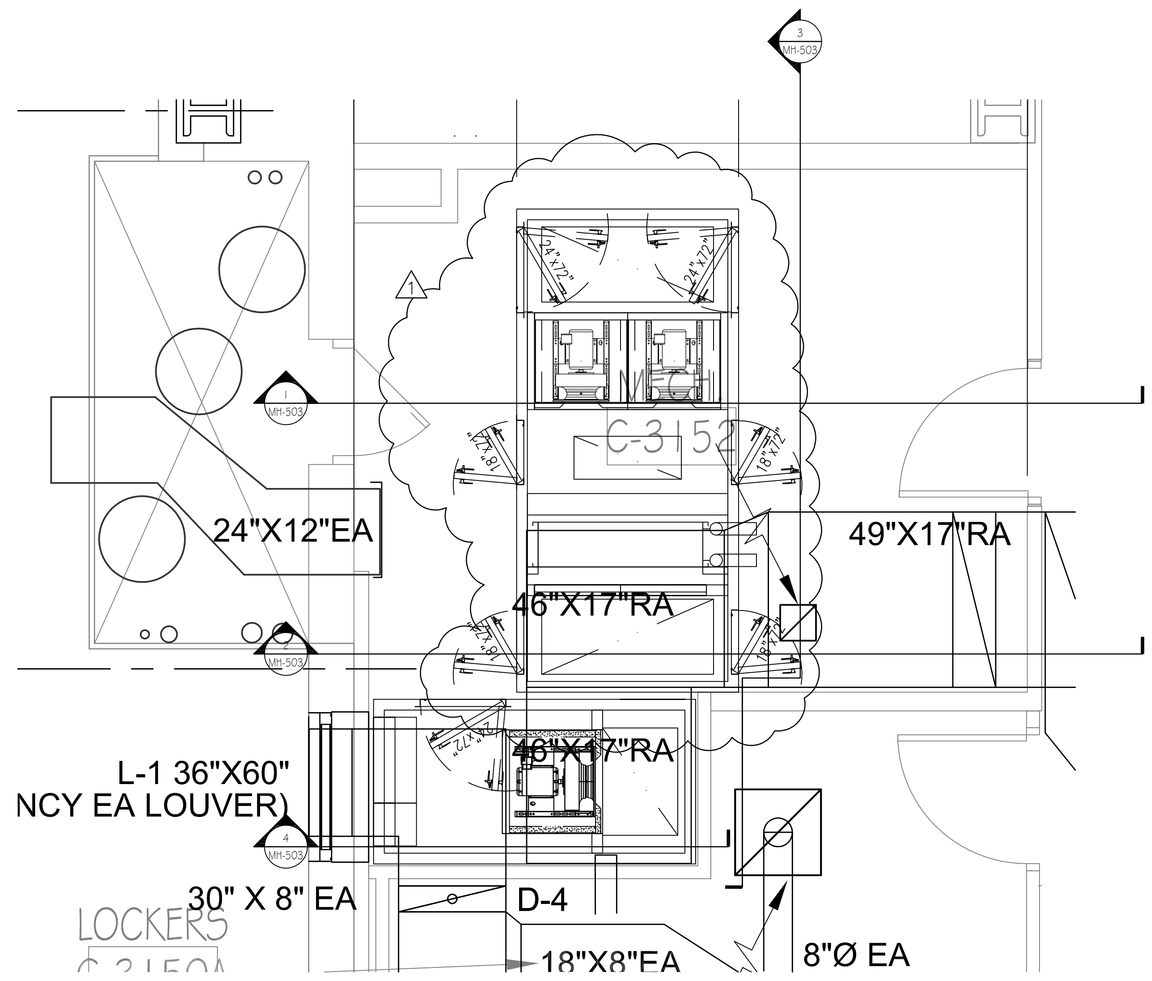

2 MH403 ENLARGED MECHANICAL ROOM PLAN
SCALE: 1/2" = 1'-0"

N

1 MH403 PARTIAL 3RD FLOOR ENLARGED HVAC FLOOR PLAN
SCALE: 1/4" = 1'-0"

N

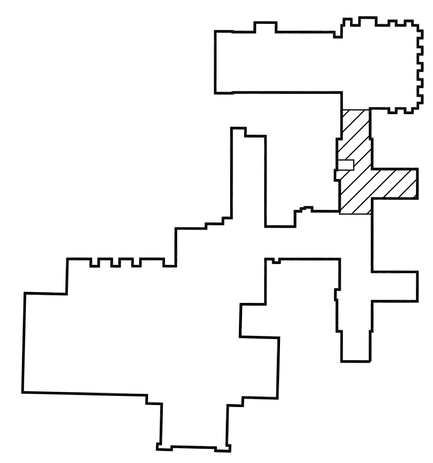

3RD FLOOR KEY PLAN
NO SCALE

NOTES

1. THE CONTRACTOR SHALL BE RESPONSIBLE TO VISUALLY IDENTIFY INTERFERENCES AND TO MAKE NECESSARY ADJUSTMENTS IN THE FIELD.
2. THE DIAGRAM IS INTENDED TO SHOW THOSE ITEMS THAT ARE NEEDED PER DESIGN REQUIREMENTS AND DOES NOT REFLECT ANY ADDITIONAL ITEMS BOTH PHYSICALLY AND CONSTRUCTION CONDITIONS.
3. MECHANICAL CONTRACTOR SHALL BE RESPONSIBLE TO WORK WITH OTHER SYSTEMS (EI. ELECTRICAL, PLUMBING, FIRE PROTECTION AND COMMUNICATIONS) AND TO IDENTIFY DISCREPANCIES AND BRING THEM TO THE ATTENTION OF THE DEPARTMENT OF VETERANS AFFAIRS (V.A.) REPRESENTATIVES AS SOON AS POSSIBLE DURING BIDDING TO OBTAIN GUIDANCE. THIS SHALL NOT ALLEVIATE THE CONTRACTOR OF THE RESPONSIBILITY TO PROVIDE A FULLY FUNCTIONING SYSTEM.

DETAIL REFERENCE

- 6 / MH-500 — DUCT CROSSOVER
- 7 / MH-501, 5 / MH-501, 4 / MH-501, 3 / MH-501, 2 / MH-501 — DUCT CONSTRUCTION DETAILS
- 6 / MH-501 — FIRE DAMPER FD-#
- 3 / MH-500, 6 / MH-500, 2 / MH-500 — DIFFUSER, REGISTERS, AND EXHAUST GRILLS

REVISION NOTES

1. THE DRAWING ARRANGEMENT SHOWN IN DETAIL 2 SUPERSIDES ARRANGEMENTS SHOWN ELSEWHERE IN OTHER DRAWING PLAN ARRANGEMENTS(OVERALL AND MECHANICAL PLUMBING). THOSE SHOULD BE USE FOR REFERENCE ONLY. CHANGES SHOWN TO AHU-58 PERTAIN TO THE ARRANGEMENT OF THE AIR HANDLING UNIT SECTIONS AND INCLUDE AN OUTSIDE AIR CONNECTION TO THE UNIT.

Revisions	Date
65% SUBMITTAL SET	01.07.2012
95% SUBMITTAL SET	03.07.2012
BID DOCUMENTS SUBMITTAL SET	05.14.2012
REVISION - CORRECTED AHU-58 ARRANGEMENT	8-28-2012

Dept. of Veterans Affairs
Richard L. Roudebush
VA Medical Center
1481 W. 10th Street
Indianapolis, In 46202

CONSULTANTS:

BAYSINGER DESIGN GROUP
401 North Market Street
Marion, Illinois 62959
Telephone 618.998.8015
Fax 618.998.8032

CERTIFIED BY:

STATE OF MICHIGAN
ASLAM MUKHTAR HUSAIN
ENGINEER
No. 6201035544
REGISTERED PROFESSIONAL ENGINEER

ARCHITECT/ENGINEERS:

AMERICAN STRUCTUREPOINT INC.
7260 Shadeland Station | Indianapolis, Indiana 46256
TEL 317.547.5580 | FAX 317.543.0270
www.structurepoint.com

EnerTronics ENERGY TO EXCEL
Engineering Corporation
The Fairmont Building
9245 Calumet Ave. Suite 205,
Munster, IN 46321
(219) 836-2120 Fax (219) 836-1129

Drawing Title: 3RD FLOOR ENLARGED MECHANICAL FLOOR PLANS SHEET 4 OF 4		Project Title: RENOVATE FOR CLINICAL IMPROVEMENTS	Project Number: 583C16254
			Building Number: 1
PROJECT ENGINEER: Mary Piwowarski	Approved: Engineering Chief	Location: 3 WEST - C WING & 4 EAST - C WING	Drawing Number: MH-403
SCALE: 1/8"= 1'-0"	Approved: Service Chief	Date: MAY 14, 2012 / Checked: DR / Drawn: DS	3FY12

BID DOCUMENTS

Engineering and Facilities Management Services

Department of Veterans Affairs

RLR VAMC FORM 09-JD0227

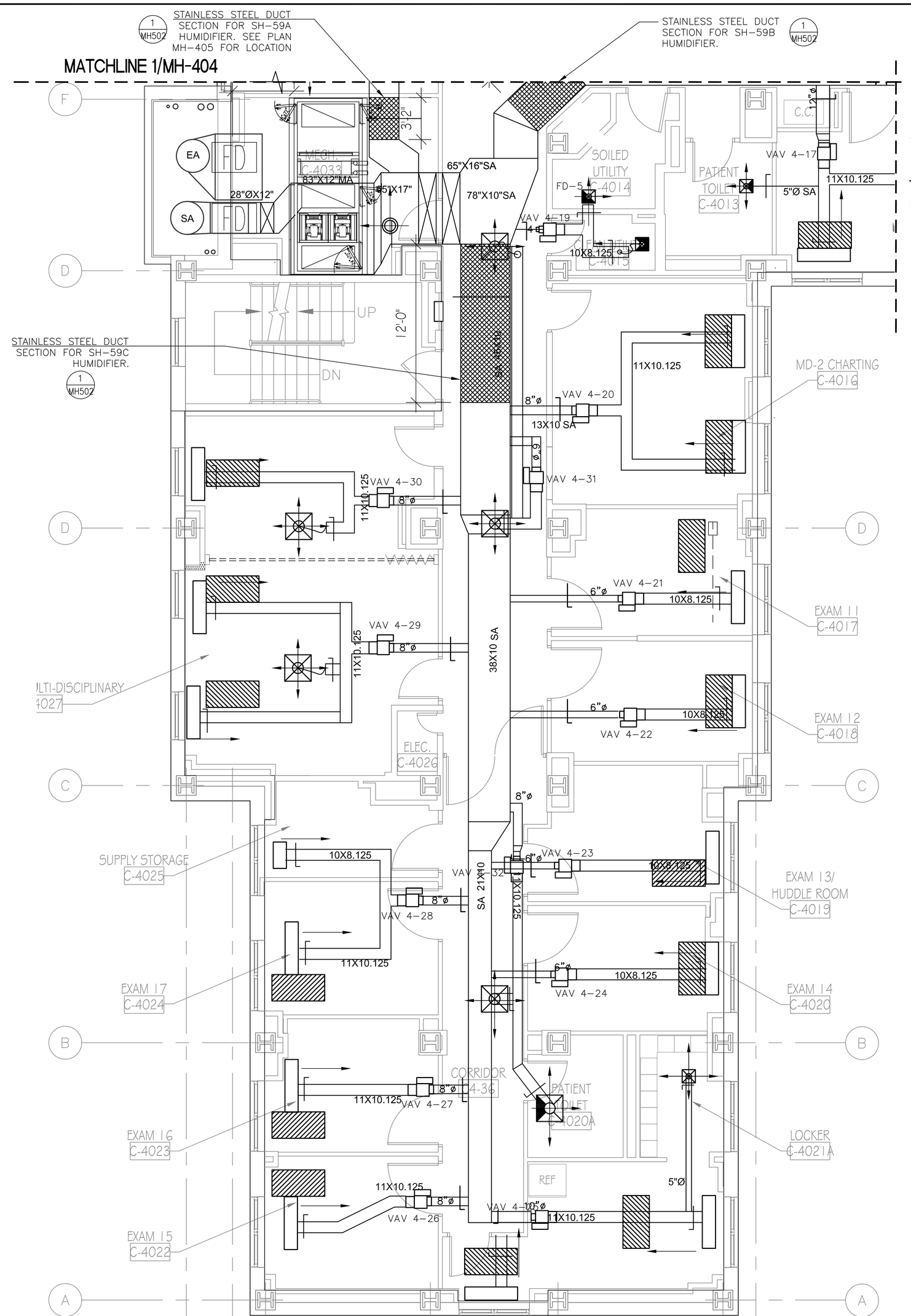

PARTIAL 4TH FLOOR ENLARGED HVAC FLOOR PLAN (1 / MH405) SCALE: 1/4" = 1'-0"

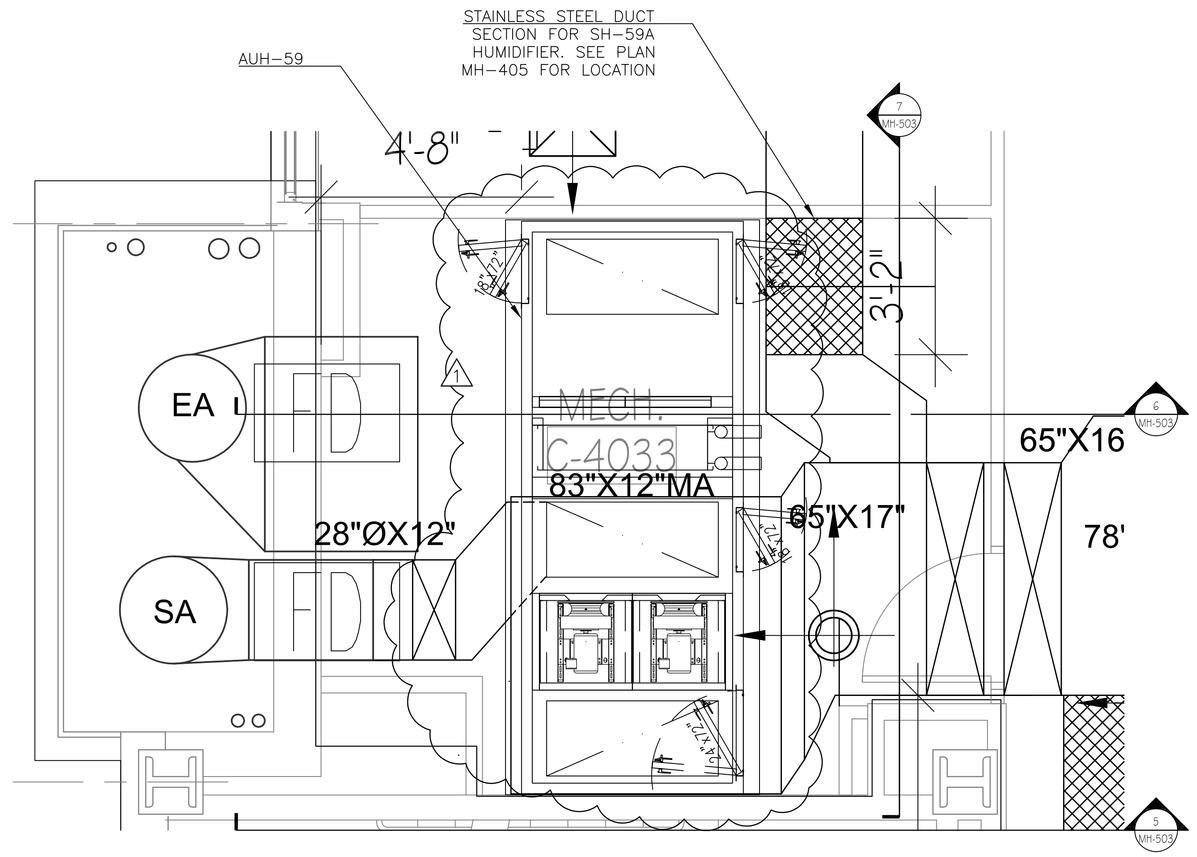

ENLARGED MECHANICAL ROOM PLAN (2 / MH405) SCALE: 1/2" = 1'-0"

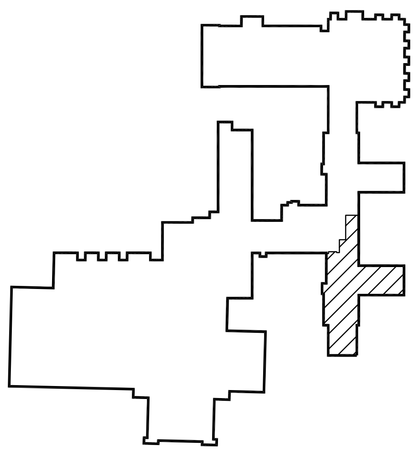

4TH FLOOR KEY PLAN
NO SCALE

NOTES

1. THE CONTRACTOR SHALL BE RESPONSIBLE TO VISUALLY IDENTIFY INTERFERENCES AND TO MAKE NECESSARY ADJUSTMENTS IN THE FIELD.
2. THE DIAGRAM IS INTENDED TO SHOW THOSE ITEMS THAT ARE NEEDED PER DESIGN REQUIREMENTS AND DOES NOT REFLECT ANY ADDITIONAL ITEMS BOTH PHYSICALLY AND CONSTRUCTION CONDITIONS.
3. MECHANICAL CONTRACTOR SHALL BE RESPONSIBLE TO WORK WITH OTHER SYSTEMS (i.e. ELECTRICAL, PLUMBING, FIRE PROTECTION AND COMMUNICATIONS) AND TO IDENTIFY DISCREPANCIES AND BRING THEM TO THE ATTENTION OF THE DEPARTMENT OF VETERANS AFFAIRS (V.A.) REPRESENTATIVES AS SOON AS POSSIBLE DURING BIDDING TO OBTAIN GUIDANCE. THIS SHALL NOT ALLEVIATE THE CONTRACTOR OF THE RESPONSIBILITY TO PROVIDE A FULLY FUNCTIONING SYSTEM.
4. VAV-# SHOWN ON THE LAYOUT IS REPRESENTIVE TO THE ZONE NUMBER ON THE HVAC ROOM BALANCING TABLE TO VAV TERMINAL UNITS WITH REHEAT COILS. SEE DRAWING MH-604 FOR VAV SCHEDULE.

DETAIL REFERENCE

- 5 / MH-500 — VAV #-#
- 8 / MH-500 — DUCT CROSSOVER
- 7 / MH-501, 5 / MH-501, 4 / MH-501, 3 / MH-501, 2 / MH-501 — DUCT CONSTRUCTION DETAILS
- 6 / MH-501 — FIRE DAMPER FD-#
- 1 / MH-502 — HUMIDIFIER DUCT SECTION
- 3 / MH-500, 6 / MH-500, 2 / MH-500 — DIFFUSER, REGISTERS, AND EXHAUST GRILLS

REVISION NOTES

1. THE DRAWING ARRANGEMENT SHOWN IN DETAIL 2 SUPERSIDES ARRANGEMENTS SHOWN ELSEWHERE IN OTHER DRAWING PLAN ARRANGEMENTS(OVERALL AND MECHANICAL PLUMBING). THOSE SHOULD BE USE FOR REFERENCE ONLY. CHANGES SHOWN TO AHU-59 PERTAIN TO THE ARRANGEMENT OF THE AIR HANDLING UNIT SECTIONS AND INCLUDE AN OUTSIDE AIR CONNECTION TO THE UNIT.

Revisions	Date
65% SUBMITTAL SET	01.07.2012
95% SUBMITTAL SET	03.07.2012
BID DOCUMENTS SUBMITTAL SET	05.14.2012
REVISION - CORRECTED AHU-59 ARRANGEMENT	8-28-2012

RLR VAMC FORM 09-JD0227

Dept. of Veterans Affairs
Richard L. Roudebush
VA Medical Center
1481 W. 10th Street
Indianapolis, In 46202

CONSULTANTS:
BAYSINGER DESIGN GROUP
401 North Market Street
Marion, Illinois 62959
Telephone 618.998.8015
Fax 618.998.8032

CERTIFIED BY:
STATE OF MICHIGAN — ASLAM MUKHTAR HUSAIN ENGINEER No. 6201035544 — LICENSED PROFESSIONAL ENGINEER

ARCHITECT/ENGINEERS:
AMERICAN STRUCTUREPOINT INC.
7260 Shadeland Station | Indianapolis, Indiana 46256
TEL 317.547.5580 | FAX 317.543.0270
www.structurepoint.com

EnerTronics ENERGY TO EXCEL
Engineering Corporation
The Fairmont Building
9245 Calumet Ave. Suite 205,
Munster, IN 46321
(219) 836-2120 Fax (219) 836-1129

Drawing Title: 4TH FLOOR ENLARGED MECHANICAL PLANS SHEET 2 OF 4		Project Title: RENOVATE FOR CLINICAL IMPROVEMENTS	Project Number: 583C16254
			Building Number: 1
PROJECT ENGINEER: Mary Piwowarski	Approved: Engineering Chief	Location: 3 WEST - C WING & 4 EAST - C WING	Drawing Number: MH-405
SCALE: 1/8"= 1'-0"	Approved: Service Chief	Date: MAY 14, 2012 / Checked: DR / Drawn: DS	3FY12

BID DOCUMENTS

Engineering and Facilities Management Services
Department of Veterans Affairs

PLOT DATE: 5/27/2012 3:21 PM
CAD DRAWING FILE LOCATION: Z:\1 PROJECTS\1105 | CLINICAL IMPROVEMENTS INDIANAPOLIS VA\BID DOCUMENTS REVISION5\MH-405.DWG

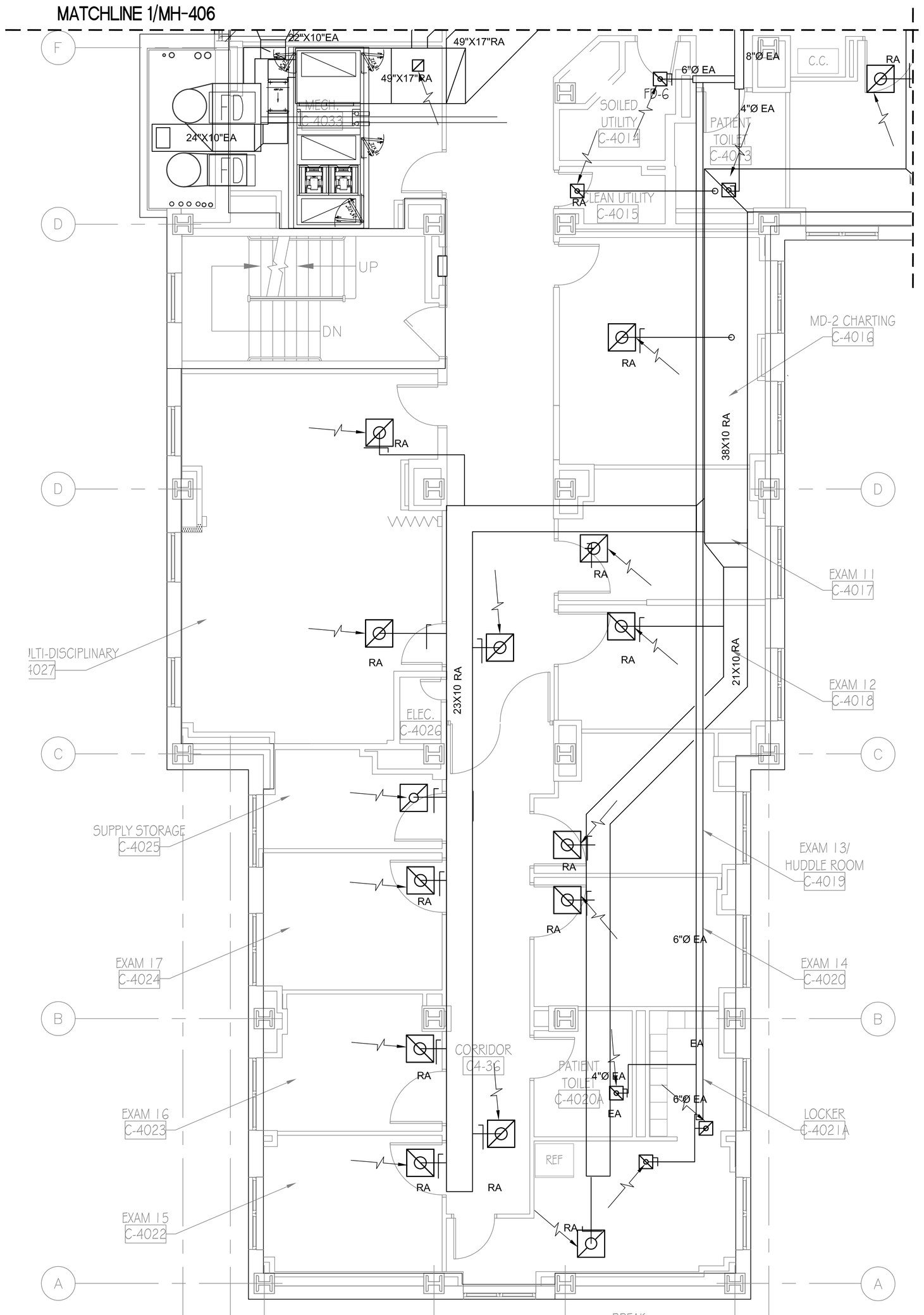

1 MH407 PARTIAL 4TH FLOOR ENLARGED HVAC FLOOR PLAN
SCALE: 1/4" = 1'-0"

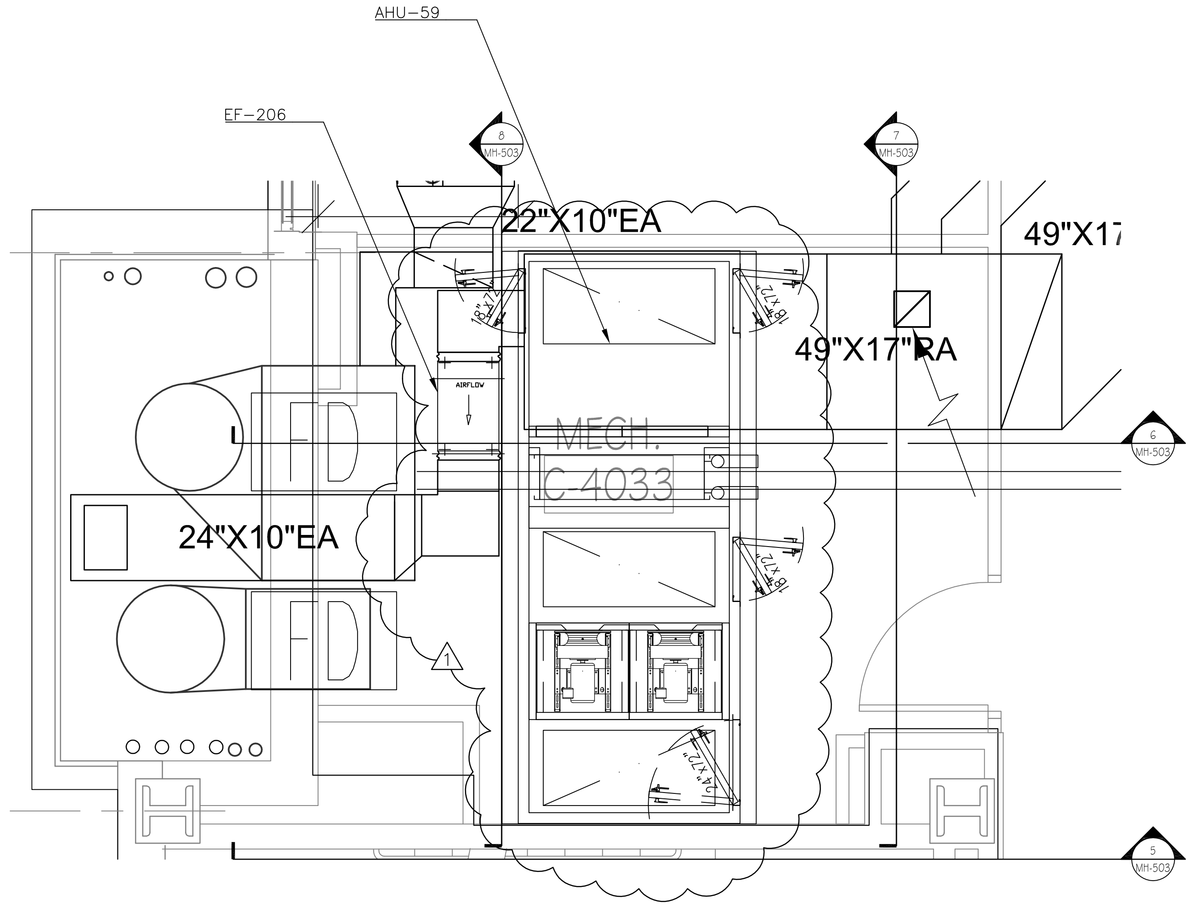

2 MH407 ENLARGED MECHANICAL ROOM PLAN
SCALE: 1/2" = 1'-0"

NOTES

1. THE CONTRACTOR SHALL BE RESPONSIBLE TO VISUALLY IDENTIFY INTERFERENCES AND TO MAKE NECESSARY ADJUSTMENTS IN THE FIELD.
2. THE DIAGRAM IS INTENDED TO SHOW THOSE ITEMS THAT ARE NEEDED PER DESIGN REQUIREMENTS AND DOES NOT REFLECT ANY ADDITIONAL ITEMS BOTH PHYSICALLY AND CONSTRUCTION CONDITIONS.
3. MECHANICAL CONTRACTOR SHALL BE RESPONSIBLE TO WORK WITH OTHER SYSTEMS (EI. ELECTRICAL, PLUMBING, FIRE PROTECTION AND COMMUNICATIONS) AND TO IDENTIFY DISCREPANCIES AND BRING THEM TO THE ATTENTION OF THE DEPARTMENT OF VETERANS AFFAIRS (V.A.) REPRESENTATIVES AS SOON AS POSSIBLE DURING BIDDING TO OBTAIN GUIDANCE. THIS SHALL NOT ALLEVIATE THE CONTRACTOR OF THE RESPONSIBILITY TO PROVIDE A FULLY FUNCTIONING SYSTEM.
4. FOR AIR BALANCE PLANS SEE DRAWING MH-410 AND MH-411

REVISION NOTES

1 THE DRAWING ARRANGEMENT SHOWN IN DETAIL 2 SUPERSIDES ARRANGEMENTS SHOWN ELSEWHERE IN OTHER DRAWING PLAN ARRANGEMENTS(OVERALL AND MECHANICAL PLUMBING). THOSE SHOULD BE USE FOR REFERENCE ONLY. CHANGES SHOWN TO AHU-59 PERTAIN TO THE ARRANGEMENT OF THE AIR HANDLING UNIT SECTIONS AND INCLUDE AN OUTSIDE AIR CONNECTION TO THE UNIT. ADDITIONALLY NEW RELIEF AIR FAN EF-206 WAS ADDED FOR COMMON CONTROLS LIKE 3RD FLOOR WEST.

DETAIL REFERENCE

- 8 / MH-500 — DUCT CROSSOVER
- 7 / MH-501, 5 / MH-501, 4 / MH-501, 3 / MH-501, 2 / MH-501 — DUCT CONSTRUCTION DETAILS
- 6 / MH-501 — FIRE DAMPER FD-#
- 3 / MH-500, 5 / MH-500, 2 / MH-500 — DIFFUSER, REGISTERS, AND EXHAUST GRILLS

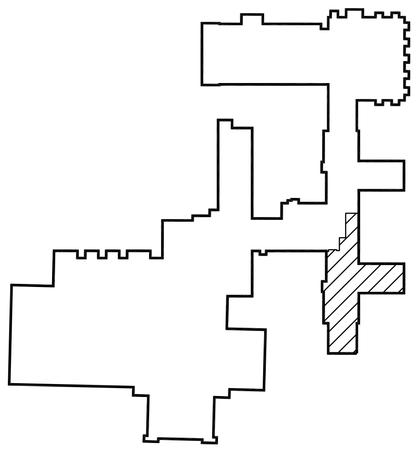

4TH FLOOR KEY PLAN
NO SCALE

Revisions	Date
65% SUBMITTAL SET	01.07.2012
95% SUBMITTAL SET	03.07.2012
BID DOCUMENTS SUBMITTAL SET	05.14.2012
REVISION - CORRECTED AHU-59 ARRANGEMENT	8-28-2012
REVISION - ADDED EF-206	8-28-2012

RLR VAMC FORM 09-JD0227

Dept. of Veterans Affairs
Richard L. Roudebush
VA Medical Center
1481 W. 10th Street
Indianapolis, In 46202

CONSULTANTS:
BAYSINGER DESIGN GROUP
401 North Market Street
Marion, Illinois 62959
Telephone 618.998.8015
Fax 618.998.8032

CERTIFIED BY:
STATE OF MICHIGAN ASLAM MUKHTAR HUSAIN ENGINEER No. 6201035544 LICENSED PROFESSIONAL ENGINEER

ARCHITECT/ENGINEERS:
AMERICAN STRUCTUREPOINT INC.
7260 Shadeland Station | Indianapolis, Indiana 46256
TEL 317.547.5580 | FAX 317.543.0270
www.structurepoint.com

EnerTronics ENERGY TO EXCEL
Engineering Corporation
The Fairmont Building
9245 Calumet Ave. Suite 205,
Munster, IN 46321
(219) 836-2120 Fax (219) 836-1129

Drawing Title: 4TH FLOOR ENLARGED MECHANICAL PLANS SHEET 4 OF 4		Project Title: RENOVATE FOR CLINICAL IMPROVEMENTS	Project Number: 583C16254
			Building Number: 1
PROJECT ENGINEER: Mary Piwowarski	Approved: Engineering Chief	Location: 3 WEST - C WING & 4 EAST - C WING	Drawing Number: MH-407
SCALE: 1/8"= 1'-0"	Approved: Service Chief	Date: MAY 14, 2012 / Checked: DR / Drawn: DS	3FY12

BID DOCUMENTS

Engineering and Facilities Management Services

Department of Veterans Affairs

PLOT DATE: 5/27/2012 3:20 PM
CAD DRAWING FILE LOCATION: Z:\1 PROJECTS\1105 | CLINICAL IMPROVEMENTS INDIANAPOLIS VA\BID DOCUMENTS REVISION5\MH-407.DWG

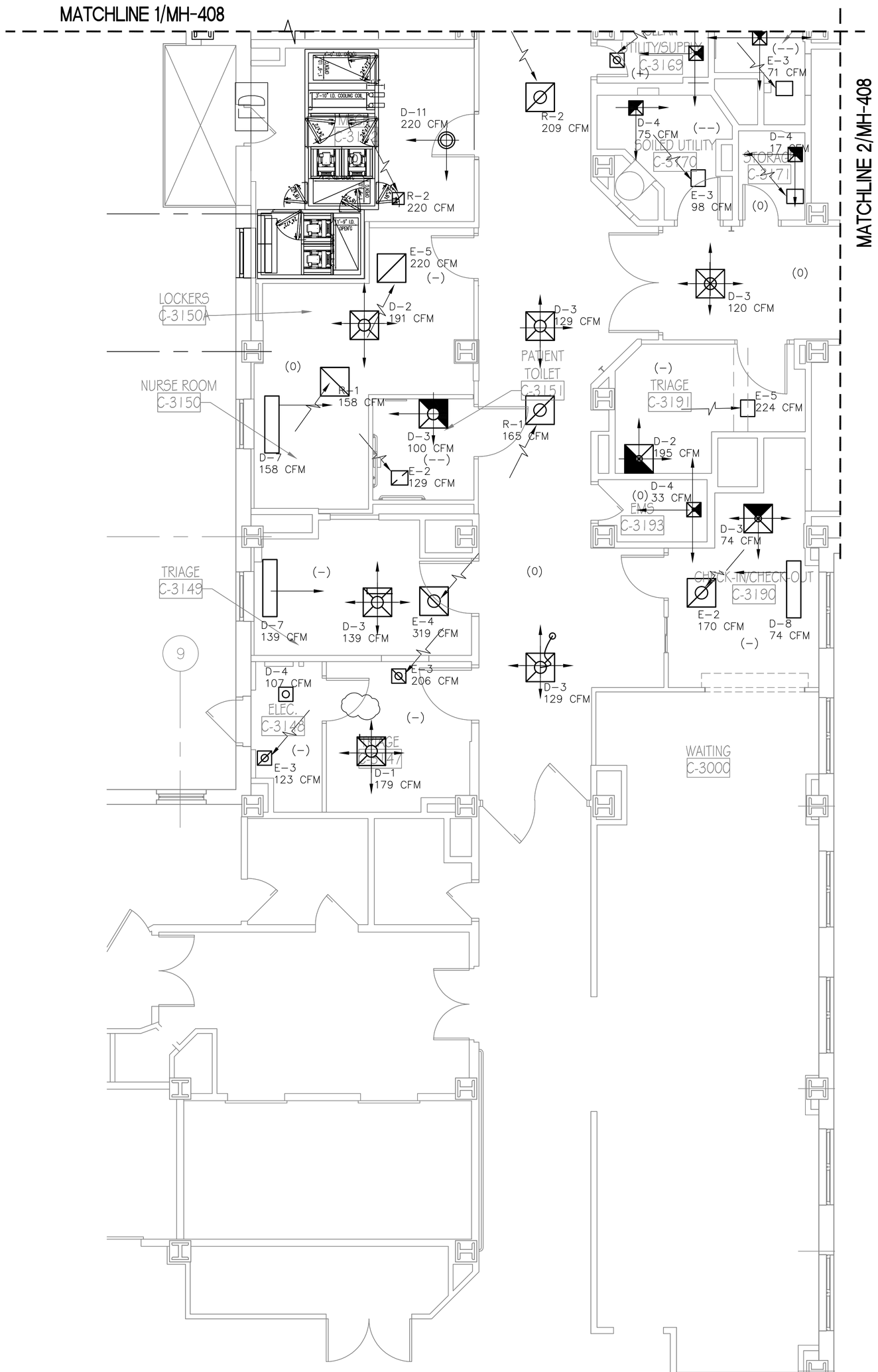

1 MH409 PARTIAL 3RD FLOOR ENLARGED HVAC FLOOR PLAN

SCALE: 1/4" = 1'-0"

N

NOTES

1. THE CONTRACTOR SHALL BE RESPONSIBLE TO VISUALLY IDENTIFY INTERFERENCES AND TO MAKE NECESSARY ADJUSTMENTS IN THE FIELD.
2. THE DIAGRAM IS INTENDED TO SHOW THOSE ITEMS THAT ARE NEEDED PER DESIGN REQUIREMENTS AND DOES NOT REFLECT ANY ADDITIONAL ITEMS BOTH PHYSICALLY AND CONSTRUCTION CONDITIONS.
3. MECHANICAL CONTRACTOR SHALL BE RESPONSIBLE TO WORK WITH OTHER SYSTEMS (i.e. ELECTRICAL, PLUMBING, FIRE PROTECTION AND COMMUNICATIONS) AND TO IDENTIFY DISCREPANCIES AND BRING THEM TO THE ATTENTION OF THE DEPARTMENT OF VETERANS AFFAIRS (V.A.) REPRESENTATIVES AS SOON AS POSSIBLE DURING BIDDING TO OBTAIN GUIDANCE. THIS SHALL NOT ALLEVIATE THE CONTRACTOR OF THE RESPONSIBILITY TO PROVIDE A FULLY FUNCTIONING SYSTEM.
4. CFM ROOM VALUES ARE TAKING ACCOUNT 20% FACTOR
5. CONTRACTOR SHALL INTITIALLY SET THE BALANCING DAMPER TO ACHIEVE RATED FLOW RATE WITH THE FOLLOWING TOLERANCE:
   + 0
   − 10%
6. HEATING AND COOLING VARIATIONS SHALL BE TAKEN TO LOCALLY ADJUST THE CFM UPWARDS.

LEGEND

TA	TRANSFER AIR
(++)	HIGH POSITIVE PRESSURE
(+)	MODERATE POSITIVE PRESSURE
(--)	HIGH NEGATIVE PRESSURE
(-)	MODERATE NEGATIVE PRESSURE
(0)	NEUTRAL PRESSURE

DETAIL REFERENCE

6/MH-500 2/MH-500 D-#

3/MH-500 R-#

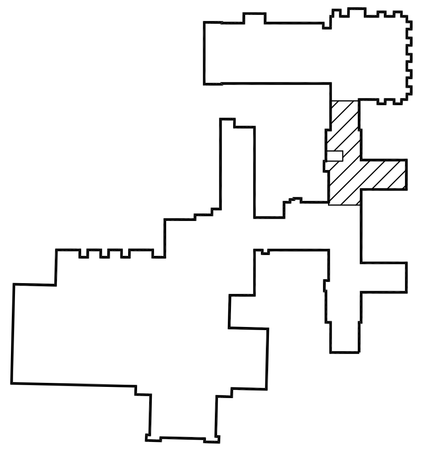

3RD FLOOR KEY PLAN

NO SCALE

BID DOCUMENTS

65% SUBMITTAL SET	01.07.2012
95% SUBMITTAL SET	03.07.2012
BID DOCUMENTS SUBMITTAL SET	05.14.2012
REVISION - CORRECTED TITLE	8-28-2012
Revisions:	Date

Dept. of Veterans Affairs
Richard L. Roudebush
VA Medical Center
1481 W. 10th Street
Indianapolis, In 46202

CONSULTANTS:

BAYSINGER DESIGN GROUP
401 North Market Street
Marion, Illinois 62959
Telephone 618.998.8015
Fax 618.998.8032

CERTIFIED BY:

STATE OF MICHIGAN ASLAM MUKHTAR HUSAIN ENGINEER No. 6201035544 LICENSED PROFESSIONAL ENGINEER

ARCHITECT/ENGINEERS:

AMERICAN STRUCTUREPOINT INC
7260 Shadeland Station | Indianapolis, Indiana 46256
TEL 317.547.5580 | FAX 317.543.0270
www.structurepoint.com

EnerTronics ENERGY TO EXCEL
Engineering Corporation
The Fairmont Building
9245 Calumet Ave. Suite 205,
Munster, IN 46321
(219) 836-2120 Fax (219) 836-1129

Drawing Title: ENLARGED 3RD FLOOR AIR BALANCING SHEET 2 OF 2		Project Title: RENOVATE FOR CLINICAL IMPROVEMENTS		Project Number: 583C16254	Engineering and Facilities Management Services
PROJECT ENGINEER: Mary Piwowarski	Approved: Engineering Chief	Location: 3 WEST - C WING & 4 EAST - C WING		Building Number: 1	
SCALE: 1/8"=1'-0"	Approved: Service Chief	Date: MAY 14, 2012	Checked: DR / Drawn: DS	Drawing Number: MH-409 3FY12	Department of Veterans Affairs

RLR VAMC FORM 09-JD0227

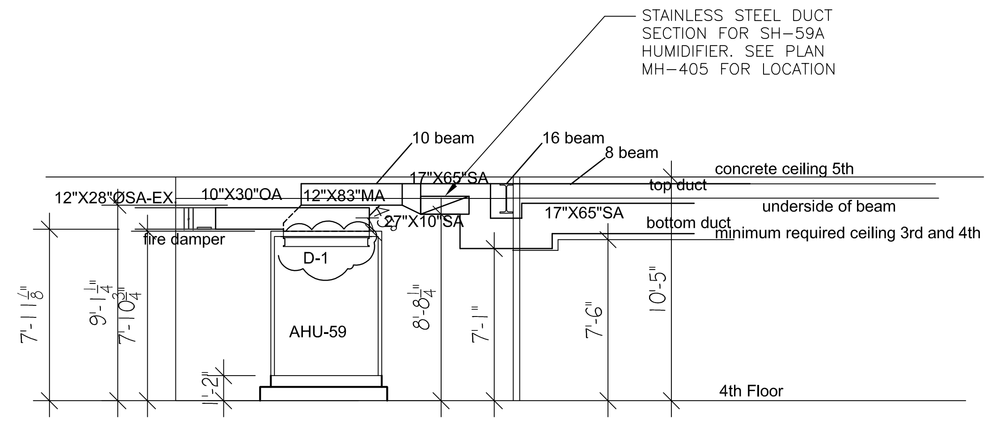

4TH FLOOR AHU-59 SUPPLY AND OUTSIDE AIR ELEVATION (LOOKING WEST) (6 / MH-503)
SCALE: 1/4"=1'-0"
REFERENCE MH-405 AND MH-407

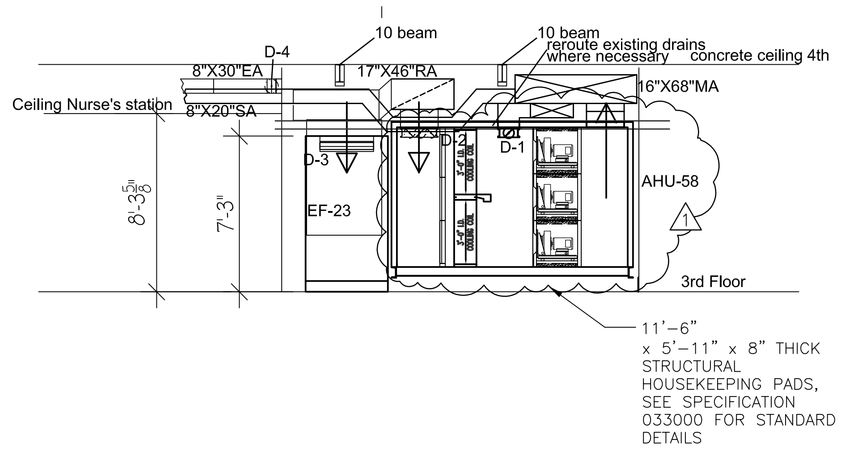

3RD FLOOR AHU-58 AND EF-23 ELEVATION (LOOKING SOUTH) (3 / MH-503)
SCALE: 1/4"=1'-0"
REFERENCE MH-401 AND MH-403

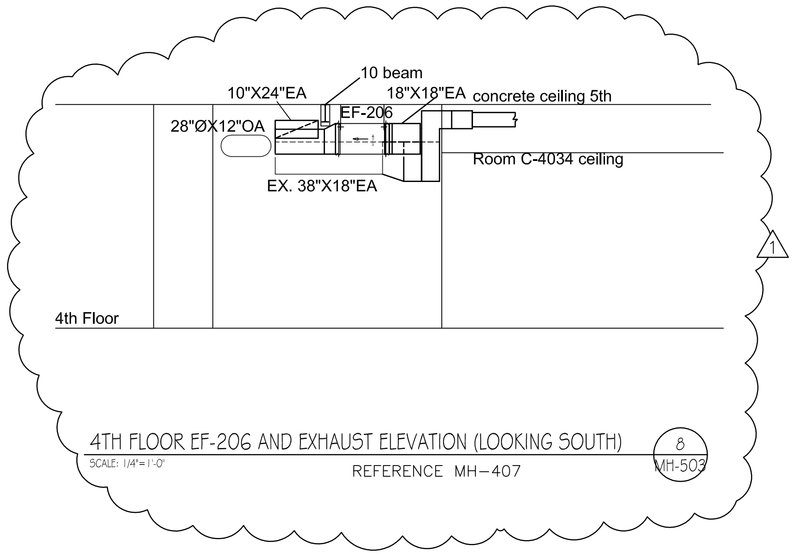

4TH FLOOR EF-206 AND EXHAUST ELEVATION (LOOKING SOUTH) (8 / MH-503)
SCALE: 1/4"=1'-0"
REFERENCE MH-407

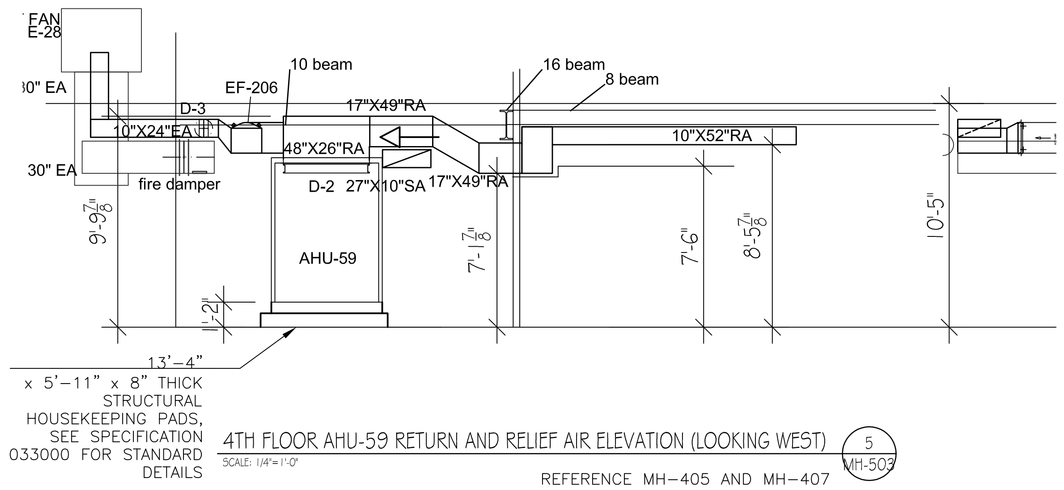

4TH FLOOR AHU-59 RETURN AND RELIEF AIR ELEVATION (LOOKING WEST) (5 / MH-503)
SCALE: 1/4"=1'-0"
REFERENCE MH-405 AND MH-407

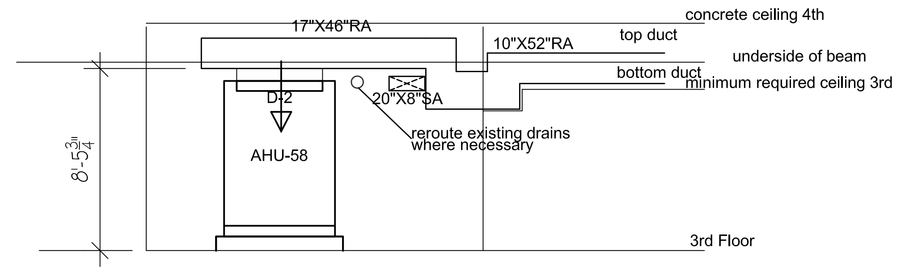

3RD FLOOR AHU-58 RETURN AIR ELEVATION (LOOKING WEST) (2 / MH-503)
SCALE: 1/4"=1'-0"
REFERENCE MH-401 AND MH-403

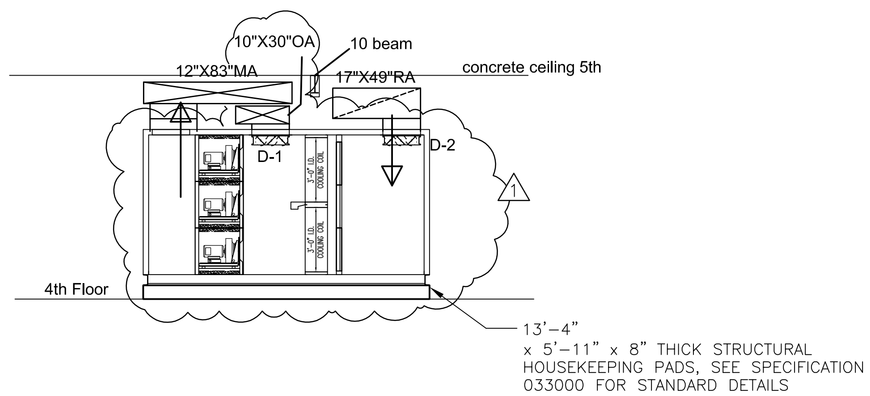

4TH FLOOR AHU-59 ELEVATION (LOOKING SOUTH) (7 / MH-503)
SCALE: 1/4"=1'-0"
REFERENCE MH-405 AND MH-407

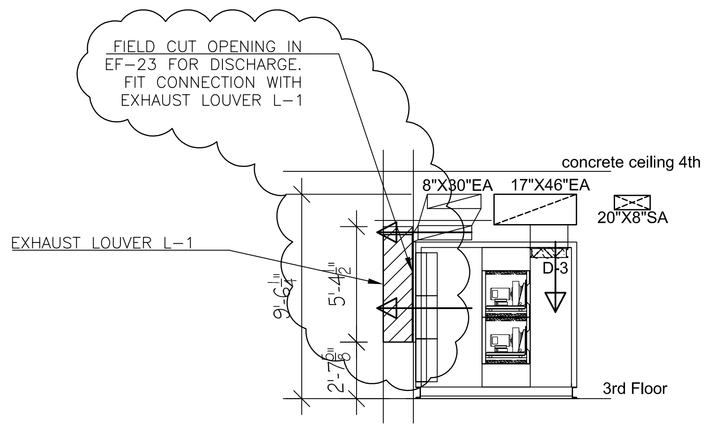

3RD FLOOR EF-23 ELEVATION (LOOKING WEST) (4 / MH-503)
SCALE: 1/4"=1'-0"
REFERENCE MH-401 AND MH-403

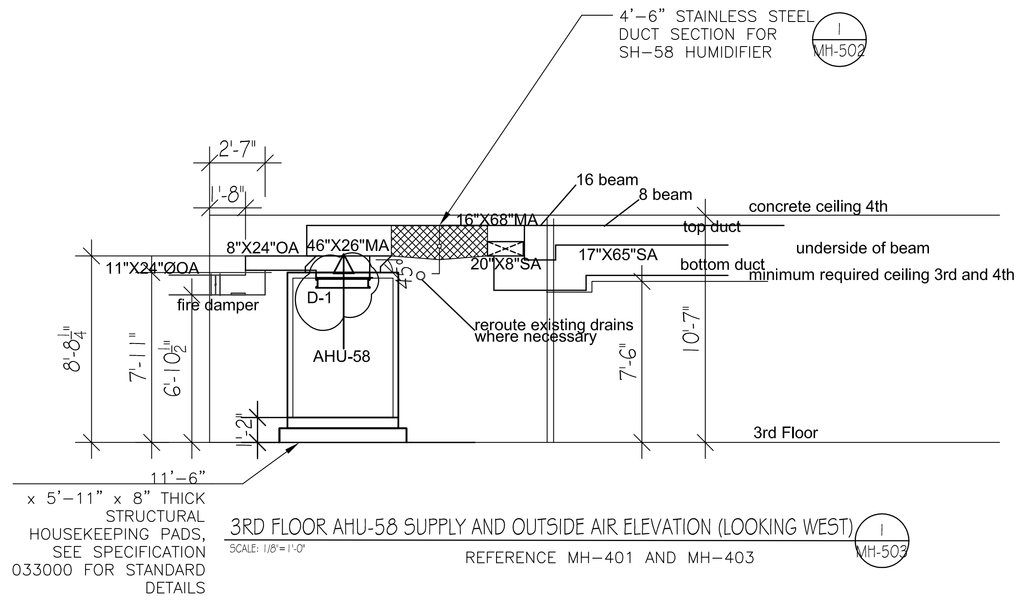

3RD FLOOR AHU-58 SUPPLY AND OUTSIDE AIR ELEVATION (LOOKING WEST) (1 / MH-503)
SCALE: 1/8"=1'-0"
REFERENCE MH-401 AND MH-403

BID DOCUMENTS

Revisions:	Date
65% SUBMITTAL SET	01.07.2012
95% SUBMITTAL SET	03.07.2012
BID DOCUMENTS SUBMITTAL SET	05.14.2012
REVISION - CORRECTED AHU-58 AND 59 ARRANGEMENT	8-28-2012
REVISION - ADDED OUTSIDE AIR DUCT TO AHU-58 AND 59	8-28-2012
REVISION - ADDED EF-206	8-28-2012

Dept. of Veterans Affairs
Richard L. Roudebush
VA Medical Center
1481 W. 10th Street
Indianapolis, In 46202

CONSULTANTS:
BAYSINGER DESIGN GROUP
401 North Market Street
Marion, Illinois 62959
Telephone 618.998.8015
Fax 618.998.8032

CERTIFIED BY:
STATE OF MICHIGAN
ASLAM MUKHTAR HUSAIN
ENGINEER No. 6201035544
LICENSED PROFESSIONAL ENGINEER

ARCHITECT/ENGINEERS:
AMERICAN STRUCTUREPOINT INC.
7260 Shadeland Station | Indianapolis, Indiana 46256
TEL 317.547.5580 | FAX 317.543.0270
www.structurepoint.com

EnerTronics ENERGY TO EXCEL
Engineering Corporation
The Fairmont Building
9245 Calumet Ave. Suite 205,
Munster, IN 46321
(219) 836-2120 Fax (219) 836-1129

Drawing Title: MECHANICAL ELEVATIONS AND SECTIONS		Project Title: RENOVATE FOR CLINICAL IMPROVEMENTS	Project Number: 583C16254
			Building Number: 1
PROJECT ENGINEER: Mary Piwowarski	Approved: Engineering Chief	Location: 3 WEST - C WING & 4 EAST - C WING	Drawing Number: MH-503
SCALE: 1/8"= 1'-0"	Approved: Service Chief	Date: MAY 14, 2012 / Checked / Drawn	3FY12

Engineering and Facilities Management Services
Department of Veterans Affairs

RLR VAMC FORM 09-JD0227

PLOT DATE: 6/27/2012 3:15 PM
CAD DRAWING FILE LOCATION: Z:\1 PROJECTS\105 | CLINICAL IMPROVEMENTS INDIANAPOLIS VA\BID DOCUMENTS REVISIONS\MH-503.DWG

3RD FLOOR HVAC BALANCING TABLE

Room No.	Functional Area	Area (ft2)	Air Changes /hr	Air balance	Ceiling Height	VAV #	RHP#	Supply Air Temp F	Return Air Temp F	Reheat Load (BTU)	Min. Supply Air CFM - Occupied (Initial Set-Point)	Min Supply Air CFM - Unoccupied	Supply Air Rated Design CFM	Reheat Hot Water Flow (GPM)	Radiant Panel (GPM)	Total (GPM)	Min. Return Air CFM - Occupied (Initial Set-Point)	Min Return Air CFM - Unoccupied	Return Air Max	Min. General Exhaust Air CFM - Occupied (Initial Set-Point)	General Exhaust Max
C-3190	Check -in/out	137	4	negative (-)	8.3	3-2	6	55	78	1768	76	38	148	0.38	0.15	0.53	0	38	0.00	87	169.77
C3-13	Administrative Corridor Area West	388	4	neutral (0)	8.3	3-6	0	55	78	5008	215	107	258	0.67	0.00	0.67	215	107	257.63	0	0.00
C-3193	EMS	33	6	neutral (0)	8.3	3-5	0	55	78	639	27	9	33	0.09	0.00	0.09	27	9	32.87	0	0.00
C-3191	Triage	98	12	negative (-)	8.3	3-5	0	55	78	3795	163	27	195	0.51	0.00	0.51	0	0	0.00	187	224.50
C-3152	Mechanical Room	186	4	negative (-)	10.5	0	0	55	75	3037	130	65	220	0.00	0.00	0.00	0	0	220.18	0	0.00
C-3150	Nurse Station	159	6	neutral (0)	8.3	3-4	7	55	102	3079	132	44	158	0.41	0.15	0.56	132	44	158.36	0	0.00
C-3150A	Lockers	68	6	negative (-)	8.3	3-4	0	55	78	1317	56	19	191	0.50	0.00	0.50	0	0	0.00	65	219.82
C-3151	Patient Toliet	60	10	double negative (--)	8.3	3-6	0	55	78	1936	83	17	100	0.26	0.00	0.26	0	0	0.00	95	129.48
C-3149	Triage	129	12	negative (-)	8.3	3-3a	8	55	78	4995	214	36	278	0.72	0.15	0.87	0	0	0.00	246	319.43
C-3147	Triage	90	12	negative (-)	8.3	3-3	0	55	78	3485	149	25	179	0.46	0.00	0.46	0	0	0.00	172	206.17
C-3148	Electrical	48	6	negative (-)	8.3	3-3	0	55	102	929	40	13	107	0.28	0.00	0.28	0	0	0.00	46	123.35
C3-13A	Exam Corridor - North	598	4	neutral (0)	7.5	3-19	0	55	78	6975	299	150	359	0.93	0.00	0.93	299	150	358.80	0	0.00
C-3189	Exam Room- North	119	6	neutral (0)	8.3	3-7	9	55	78	2304	99	33	300	0.78	0.15	0.93	99	33	299.64	0	0.00
C-3187	Exam Room- North	127	6	neutral (0)	8.3	3-8	10	55	78	2459	105	35	311	0.81	0.15	0.96	105	35	310.86	0	0.00
C-3186	Exam Room- North	123	6	neutral (0)	8.3	3-9	11	55	78	2382	102	34	304	0.79	0.15	0.94	102	34	303.66	0	0.00
C-3184	Exam Room- North	123	6	neutral (0)	8.3	3-10	12	55	78	2382	102	34	305	0.79	0.15	0.94	102	34	304.86	0	0.00
C-3183	Exam Room- North	130	6	neutral (0)	8.3	3-11	13	55	78	2517	108	36	309	0.80	0.15	0.95	108	36	309.23	0	0.00
C-3181	Exam Room- North	129	6	neutral (0)	8.3	3-12	14	55	78	2498	107	36	336	0.87	0.15	1.02	107	36	336.09	0	0.00
C-3180	Exam Room- North	130	6	neutral (0)	8.3	3-13	15	55	78	2517	108	36	305	0.79	0.15	0.94	108	36	304.68	0	0.00
C-3178	Exam Room- North	129	6	neutral (0)	8.3	3-14	16	55	78	2498	107	36	287	0.75	0.15	0.90	107	36	287.44	0	0.00
C-3177	Exam Room- North	123	6	neutral (0)	8.3	3-15	17	55	78	2382	102	34	284	0.74	0.15	0.89	102	34	284.10	0	0.00
C-3175	Exam Room- North	123	6	neutral (0)	8.3	3-16	18	55	78	2382	102	34	284	0.74	0.15	0.89	102	34	283.75	0	0.00
C-3173	Exam Room- North	125	6	neutral (0)	8.3	3-17	19	55	78	2420	104	35	282	0.73	0.15	0.88	104	35	281.75	0	0.00
C-3172	Exam Room- North	121	6	neutral (0)	8.3	3-18	20	55	78	2343	100	33	278	0.72	0.15	0.87	100	33	278.20	0	0.00
C-3171	Storage Room	29	4	neutral (0)	8.3	3-18	0	55	78	374	16	8	19	0.05	0.00	0.05	16	8	19.26	0	0.00
C-3170	Soiled Utility	59	6	double negative (--)	8.3	3-20	0	55	78	1142	49	16	75	0.19	0.00	0.19	0	0	0.00	56	97.78
C-3168	Staff Toilet (North)	33	10	double negative (--)	8.3	3-20	0	55	78	1065	46	9	55	0.14	0.00	0.14	0	0	0.00	52	71.21
C-3169	Clean Utility/Supply Room	30	4	positive (+)	8.3	3-20	0	55	78	387	17	8	70	0.18	0.00	0.18	17	8	61.04	0	0.00
C-3167	MD Charting Room	286	4	neutral (0)	8.3	3-21	21,22	55	78	3692	158	79	475	1.23	0.30	1.54	158	79	475.44	0	0.00
C-3166	Soiled Utility	39	6	double negative (--)	8.3	3-23	0	55	78	755	32	11	46	0.12	0.00	0.12	0	0	0.00	37	60.14
C-3166A	Office	87	6	neutral (0)	8.3	3-23	23	55	78	1685	72	24	145	0.38	0.15	0.53	72	24	145.06	0	0.00
C-3165	Sleep Diagnostics	154	4	neutral (0)	8.3	3-24	24	55	78	1988	85	43	274	0.71	0.15	0.86	85	43	273.96	0	0.00
C3-13	Bedroom Suite West Corridor	697	4	neutral (0)	7.5	3-22	0	55	78	8130	349	174	418	1.08	0.00	1.08	349	174	418.20	0	0.00
C-3164/A	Patient Bedroom and Closet	202	6	neutral (0)	8.3	3-25	25	55	78	3911	168	56	201	0.52	0.00	0.52	168	56	201.19	0	0.00
C-3163	Patients Toliet	54	10	double negative (--)	8.3	3-26	0	55	78	1743	75	15	90	0.23	0.00	0.23	0	0	0.00	86	116.53
C-3162/A	Patient Bedroom and Closet	194	6	negative (-)	8.3	3-26	26	55	78	3756	161	54	262	0.68	0.15	0.83	0	0	262.48	0	0.00
C-3161/A	Patient Bedroom and Closet	156	6	neutral (0)	8.3	3-27	27	55	78	3021	129	43	492	1.28	0.15	1.43	129	43	491.92	0	0.00
C-3160	Patients Toliet	65	10	double negative (--)	8.3	3-27	0	55	78	2098	90	18	108	0.28	0.00	0.28	0	0	0.00	103	140.27
C-3159/A	Patient Bedroom and Closet	153	6	neutral (0)	8.3	3-28	28	55	78	2962	127	42	487	1.26	0.15	1.42	127	42	487.39	0	0.00
C-3157	Clean Utility	70	4	positive (+)	8.3	3-28	0	55	78	904	39	19	84	0.22	0.08	0.29	39	19	72.73	0	0.00
C-3158	Electrical Closet	0	0	0	8.3	0	0	0	78	0	0	0	0	0.00	0.00	0.00	0	0	0.00	0	0.00
C-3156	Exam Room	165	6	neutral (0)	8.3	3-29	29	55	78	3195	137	46	307	0.80	0.15	0.95	137	46	307.06	0	0.00
C-3155	Clean Utility	101	4	positive (+)	8.3	3-29	0	55	78	1304	56	28	193	0.50	0.00	0.50	56	28	167.42	0	0.00
C-3154	Exam Room	178	6	neutral (0)	8.3	3-30	30	55	78	3446	148	49	305	0.79	0.15	0.94	148	49	304.90	0	0.00
	Total	6248								111604	4784	1708	9917	25	4	32	3420	1383	8300	1234	1878

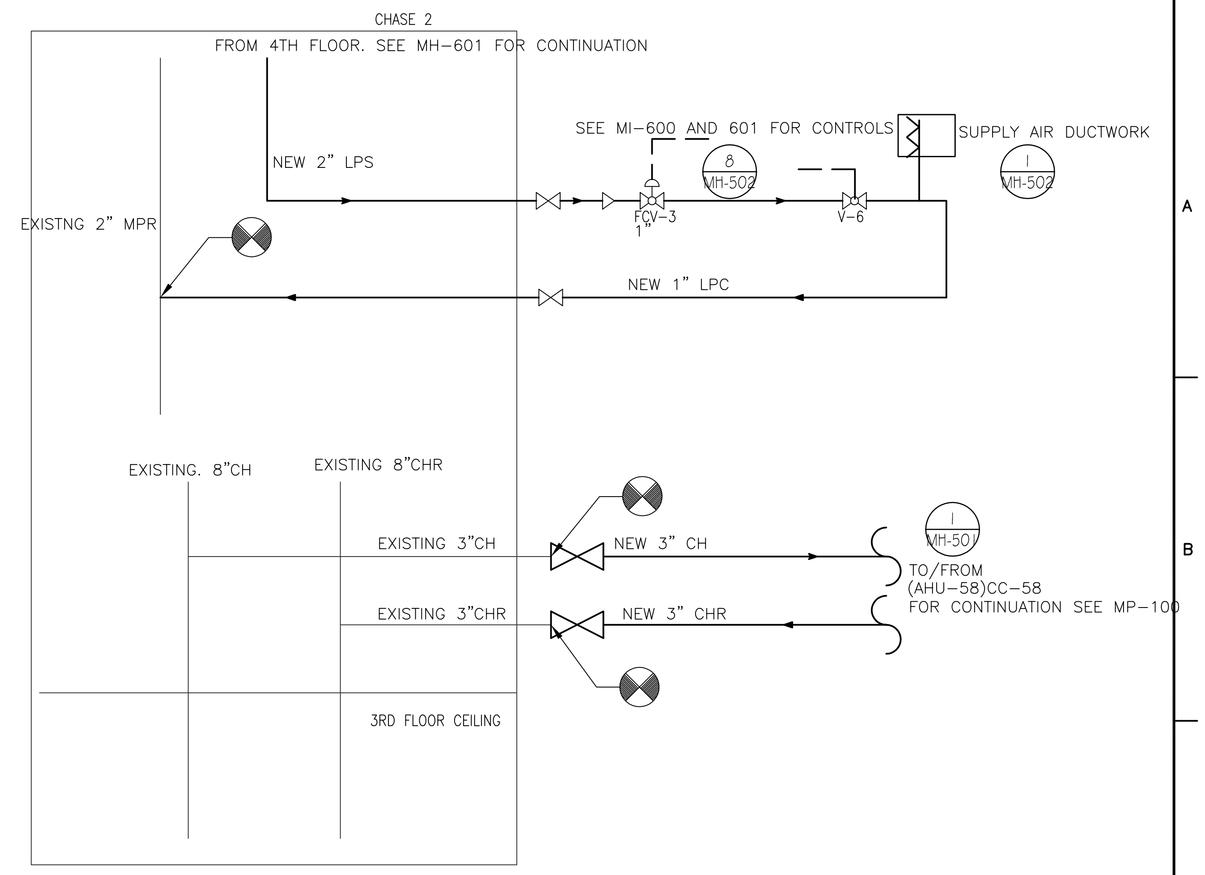

2 MH600 3RD FLOOR MECHANICAL CHILLED WATER SYSTEM BLOCK DIAGRAM
SCALE:NTS

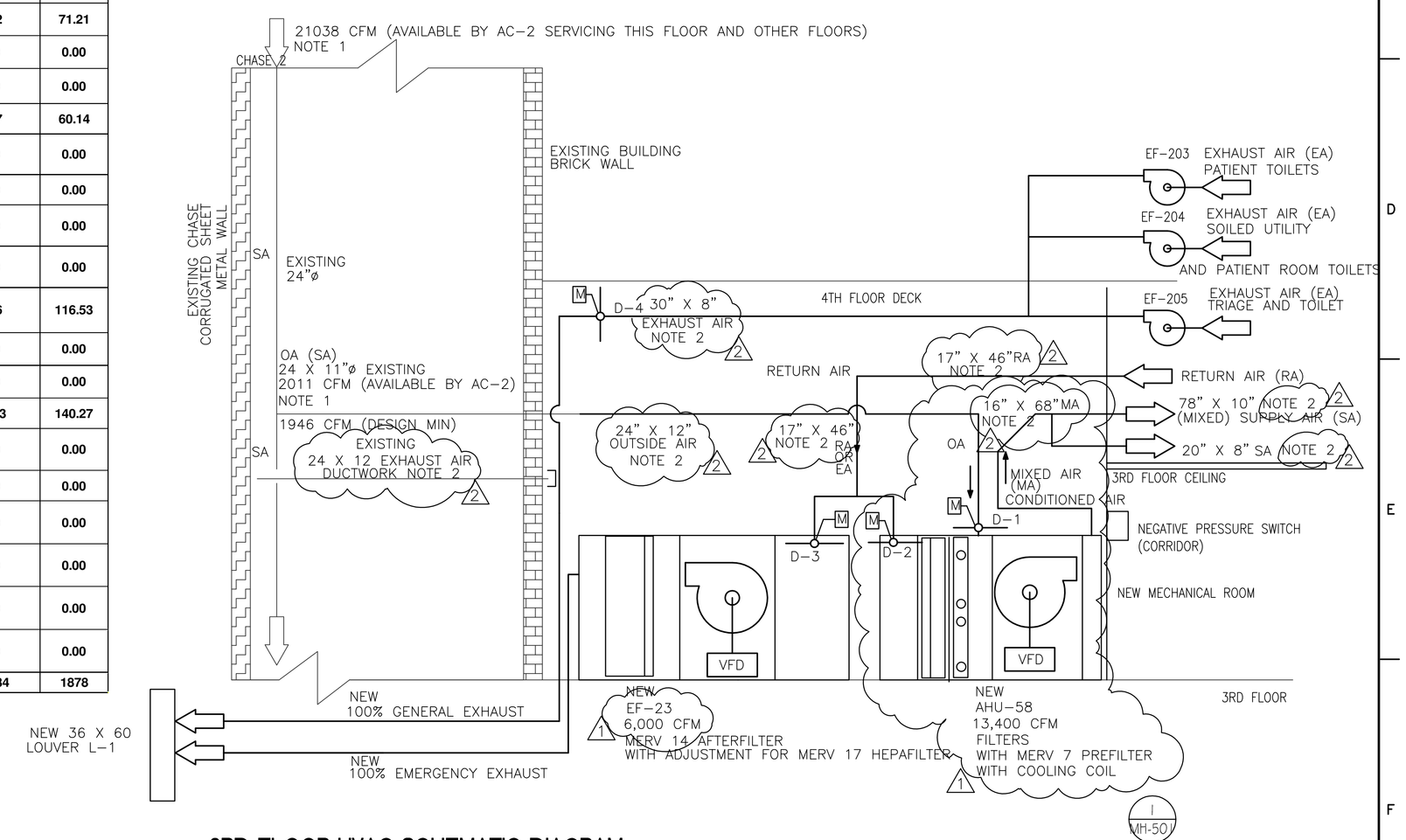

1 MH600 3RD FLOOR HVAC SCHEMATIC DIAGRAM
SCALE: NTS

NOTES
1. INFORMATION BASED ON FLOW MEASUREMENT DATA OPTAINED FOR AHU REPLACEMENT STUDY
2. FOR ACTUAL DUCTWORK LENGTHS, TRANSITIONS AND SIZES REFER TO ENLARGED MECHANICAL PLANS MH-400 TO MH-403

65% SUBMITTAL SET	01.07.2012
95% SUBMITTAL SET	03.07.2012
BID DOCUMENTS SUBMITTAL SET	05.14.2012
REVISION - CORRECTED AHU-58 ARRANGEMENT	8-28-2012
REVISION - CORRECTED EF-23 PERFORMANCE	8-28-2012
REVISION - CLARIFIED DUCTWORK SIZES AND NOTATIONS 2	8-30-2012
Revisions:	Date

Dept. of Veterans Affairs
Richard L. Roudebush
VA Medical Center
1481 W. 10th Street
Indianapolis, In 46202

CONSULTANTS:
BAYSINGER DESIGN GROUP
401 North Market Street
Marion, Illinois 62959
Telephone 618.998.8015
Fax 618.998.8032

CERTIFIED BY:
STATE OF MICHIGAN ASLAM MUKHTAR HUSAIN ENGINEER No. 6201035544 REGISTERED PROFESSIONAL ENGINEER

ARCHITECT/ENGINEERS:
AMERICAN STRUCTUREPOINT INC.
7260 Shadeland Station | Indianapolis, Indiana 46256
TEL 317.547.5580 | FAX 317.543.0270
www.structurepoint.com

EnerTronics ENERGY TO EXCEL
Engineering Corporation
The Fairmont Building
9245 Calumet Ave. Suite 205,
Munster, IN 46321
(219) 836-2120 Fax (219) 836-1129

Drawing Title: 3RD FLOOR MECHANICAL BLOCK DIAGRAM AND HVAC BALANCING SHEET		Project Title: RENOVATE FOR CLINICAL IMPROVEMENTS		Project Number: 583C16254
				Building Number: 1
PROJECT ENGINEER: Mary Piwowarski	Approved: Engineering Chief	Location: 3 WEST - C WING & 4 EAST - C WING		Drawing Number: MH-600
SCALE: 1/8"= 1'-0"	Approved: Service Chief	Date: MAY 14, 2012	Checked: DR/AMH / Drawn: DS	3FY12

BID DOCUMENTS

Engineering and Facilities Management Services

Department of Veterans Affairs

RLR VAMC FORM 09-JD0227

PLOT DATE: 5/31/2012 12:16 PM
CAD DRAWING FILE LOCATION: Z:\1 PROJECTS\1051 CLINICAL IMPROVEMENTS INDIANAPOLIS VA\PRE-BID RFI\BID DOCUMENTS REVISION5\MH-600.DWG

4TH FLOOR HVAC BALANCING TABLE

Room No.	Functional Area	Area (ft2)	Air Changes /hr	Air balance	Ceiling Height	VAV #	RHP #	Supply air temp F	Return Air F	Reheat Load	Min. Supply Air CFM - Occupied (Initial Set-Point)	Min Supply Air CFM - Unoccupied	Supply Air Rated Design CFM	Reheat Hot Water Flow (GPM)	Radiant Panel (GPM)	Total (GPM)	Min. Return Air CFM - Occupied (Initial Set-Point)	Min Return Air CFM - Unoccupied	Return Air Max	Min. General Exhaust Air CFM - Occupied (Initial Set-Point)	General Exhaust Max
C4-37	Waiting Corridor	393	4	neutral (0)	8.1	0	0	55	78	4951	212	106	255	0.66	0.00	0.66	212	106	255	0	0
C-4002	Patient Restroom (waiting)	68	10	double negative (–)	8.1	4-1	0	55	78	2142	92	18	110	0.29	0.00	0.29	0	0	0	106	143
C-4001	Waiting	362	6	negative (-)	8.1	4-1	1,2,3	55	78	6840	293	98	393	1.02	0.91	1.93	0	0	0	337	452
C-4001	Waiting	393	6	negative (-)	8.1	4-1a	4,5,6	55	78	7426	318	106	382	0.99	0.91	1.90	0	0	0	366	439
C-4003	Check -in/out	176	4	negative (-)	8.1	4-3	7	55	78	2217	95	48	220	0.57	0.15	0.72	0	0	0	109	253
C4-34	Administrative Corridor Area West	418	4	neutral (0)	8.1	4-5	0	55	78	5266	226	113	271	0.70	0.00	0.70	226	113	271	0	0
C-4005	Staff Toilet (west)	46	10	double negative (–)	8.1	4-3	0	55	78	1449	62	12	75	0.19	0.00	0.19	0	0	0	71	97
C-4034	Clean Utility	92	4	positive (+)	8.1	4-4	0	55	78	1159	50	25	230	0.60	0.08	0.67	50	25	200	0	0
C-4033	Mechanical Room	186	4	neutral (0)	10.5	0	0	55	102	3037	130	65	156	0.40	0.00	0.40	130	65	156	0	0
C-4035	Nurse Station	232	6	neutral (0)	8.1	4-4	10	55	78	4384	188	63	403	1.04	0.15	1.20	188	63	403	0	0
C-4036	Triage	136	12	negative (-)	8.1	4-6	8	55	78	5140	220	37	282	0.73	0.15	0.88	0	0	0	253	324
C-4037	Triage	134	12	negative (-)	8.1	4-2	9	55	78	5064	217	36	281	0.73	0.15	0.88	0	0	0	250	323
C4-35	Exam Corridor - North	615	4	neutral (0)	7.5	4-18	0	55	78	7173	308	154	369	0.96	0.00	0.96	308	154	369	0	0
C-4004	Wheel Chair Alcove (part of corridor)	40	4	neutral (0)	8.1	4-18	0	55	78	504	22	11	26	0.07	0.00	0.07	22	11	26	0	0
C-4006	EMS	39	6	neutral (0)	8.1	4-18	0	55	78	737	32	11	38	0.10	0.00	0.10	32	11	38	0	0
C-4007	ExamRoom 1- North	124	6	neutral (0)	8.1	4-7	11	55	78	2343	100	33	283	0.73	0.15	0.89	100	33	283	0	0
C-4007A	ExamRoom 2- North	131	6	neutral (0)	8.1	4-8	12	55	78	2475	106	35	288	0.75	0.15	0.90	106	35	288	0	0
C-4008	ExamRoom 3- North	125	6	neutral (0)	8.1	4-9	13	55	78	2362	101	34	286	0.74	0.15	0.89	101	34	286	0	0
C-4008A	ExamRoom 4- North	118	6	neutral (0)	8.1	4-10	14	55	78	2230	96	32	280	0.73	0.15	0.88	96	32	280	0	0
C-4009	ExamRoom 5- North	121	6	neutral (0)	8.1	4-11	15	55	78	2286	98	33	284	0.73	0.15	0.89	98	33	284	0	0
C-4009A	ExamRoom 6- North	115	6	neutral (0)	8.1	4-12	16	55	78	2173	93	31	293	0.76	0.15	0.91	93	31	293	0	0
C-4010	ExamRoom 7- North	129	6	neutral (0)	8.1	4-13	17	55	78	2438	104	35	333	0.86	0.15	1.01	104	35	333	0	0
C-4010A	ExamRoom 8- North	126	6	neutral (0)	8.1	4-14	18	55	78	2381	102	34	305	0.79	0.15	0.94	102	34	305	0	0
C-4011	ExamRoom 9- North	132	6	neutral (0)	8.1	4-15	19	55	78	2494	107	36	313	0.81	0.15	0.96	107	36	313	0	0
C-4011A	ExamRoom 10- North	127	6	neutral (0)	8.1	4-16	20	55	78	2400	103	34	303	0.79	0.15	0.94	103	34	303	0	0
C-4012	MD Chart Room 1	193	4	neutral (0)	8.1	4-17	21,22	55	78	2431	104	52	761	1.97	0.30	2.28	104	52	761	0	0
C-4013	Patient Toilet (North)	65	10	double negative (–)	8.1	4-17	0	55	78	2047	88	18	105	0.27	0.00	0.27	0	0	0	101	137
C-4014	Soiled Utility	54	6	double negative (–)	8.1	4-19	0	55	78	1020	44	15	52	0.14	0.00	0.14	0	0	0	50	68
C-4015	Clean Utility	30	4	positive (+)	8.1	4-19	0	55	78	378	16	8	42	0.11	0.00	0.11	16	8	37	0	0
C-4016	MD-2 Charting Room	252	4	neutral (0)	8.1	4-20	23,24	55	78	3174	136	68	474	1.23	0.30	1.53	136	68	474	0	0
C4-34	Exam Suite East Corridor 1	301	6	neutral (0)	7.5	4-31	0	55	78	5266	226	75	271	0.70	0.00	0.70	226	75	271	0	0
C-4017	Exam Room 11	134	6	neutral (0)	8.1	4-21	25	55	78	2532	109	36	190	0.49	0.15	0.64	109	36	190	0	0
C-4018	Exam Room 12	136	6	neutral (0)	8.1	4-22	26	55	78	2570	110	37	191	0.50	0.15	0.65	110	37	191	0	0
C4-36	Exam Suite East Corridor 2	230	6	neutral (0)	8.1	4-32	0	55	78	4346	186	62	224	0.58	0.00	0.58	186	62	224	0	0
C-4019	Exam Room 13 or Huddel Room East	136	6	neutral (0)	8.1	4-23	27	55	78	2570	110	37	190	0.49	0.15	0.65	110	37	190	0	0
C-4020	Exam Room 14 East	134	6	neutral (0)	8.1	4-24	28	55	78	2532	109	36	189	0.49	0.15	0.64	109	36	189	0	0
C-4020A	Patient Toilet (East)	61	10	double negative (–)	8.1	4-32	0	55	78	1921	82	16	99	0.26	0.00	0.26	0	0	0	95	128
C-4021	Break Room	170	4	negative (-)	8.1	4-25	29,30	55	78	2142	92	46	533	1.38	0.30	1.69	92	46	153	106	153
C-4021A	Locker Room	53	6	negative (-)	8.1	4-25	0	55	78	1001	43	14	76	0.20	0.00	0.20	0	0	0	49	87
C-4022	Exam Room 15 East	129	6	neutral (0)	8.1	4-26	31	55	78	2438	104	35	323	0.84	0.15	0.99	104	35	323	0	0
C-4023	Exam Room 16 East	120	6	neutral (0)	8.1	4-27	32	55	78	2267	97	32	333	0.86	0.11	0.97	97	32	333	0	0
C-4024	Exam Room 17 East	131	6	neutral (0)	8.1	4-28	33	55	78	2475	106	35	324	0.84	0.11	0.95	106	35	324	0	0
C-4025	Supply Storage Room	82	4	neutral (0)	8.1	4-28	0	55	78	1033	44	22	249	0.65	0.00	0.65	44	22	249	0	0
C-4026	Electrical Room	0	0	0	8.1	0	0	0	78	0	0	0	0	0.00	0.00	0.00	0	0	0	0	0
C-4027	Education Room/Mulit-Disciplinary	279	4	neutral (0)	8.1	4-29	34,35	55	78	3515	151	75	540	1.40	0.30	1.70	151	75	540	0	0
	Total	7268		0						123214	5282	1884	11082	28.73	5.91	34.64	3727	1466	8592	1893	2605

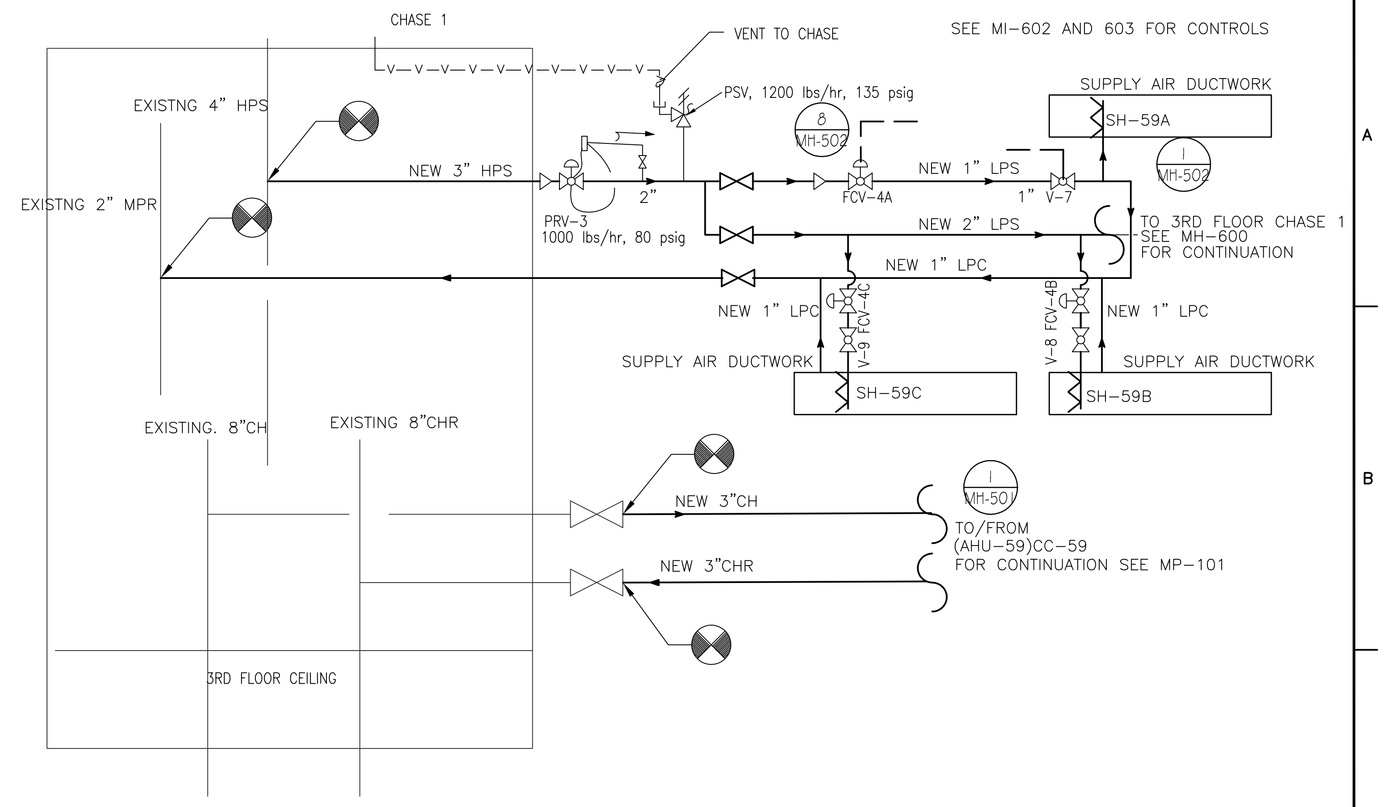

2 MH601 4TH FLOOR MECHANICAL CHILLED WATER AND STEAM SYSTEM BLOCK DIAGRAM
SCALE:NTS

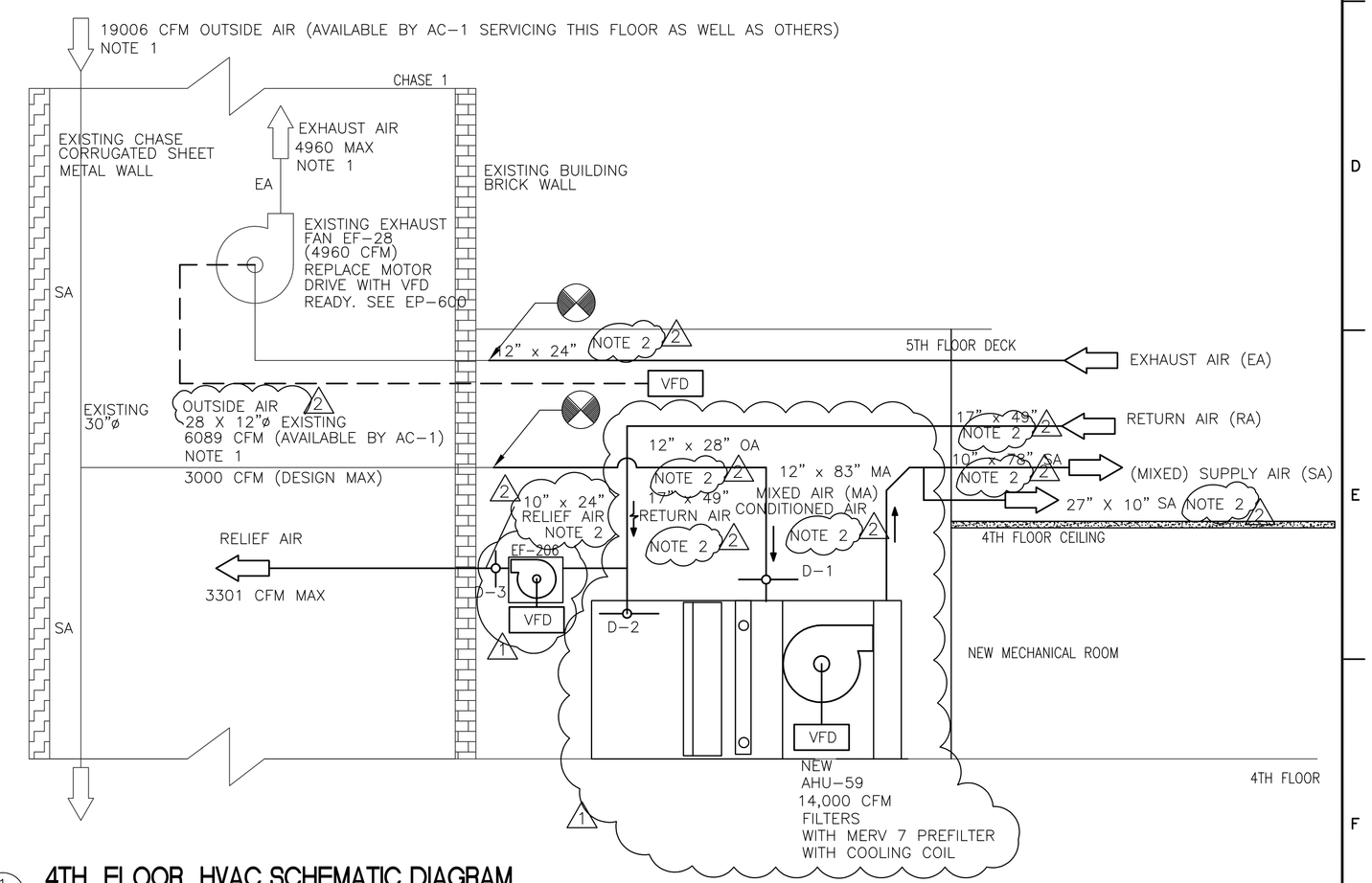

1 MH601 4TH FLOOR HVAC SCHEMATIC DIAGRAM
SCALE: NTS

NOTES
1. INFORMATION BASED ON FLOW MEASUREMENT DATA OPTAINED FOR AHU REPLACEMENT STUDY
2. FOR ACTUAL DUCTWORK LENGTHS, TRANSITIONS AND SIZES REFER TO ENLARGED MECHANICAL PLANS MH-404 TO MH-407

Revisions:	Date
65% SUBMITTAL SET	01.07.2012
95% SUBMITTAL SET	03.07.2012
BID DOCUMENTS SUBMITTAL SET	05.14.2012
REVISION - CORRECTED AHU-59 ARRANGEMENT	8-28-2012
REVISION - ADDED EF-206	8-28-2012
REVISION - CLARIFIED DUCTWORK SIZES AND NOTATIONS	8-30-2012

Dept. of Veterans Affairs
Richard L. Roudebush
VA Medical Center
1481 W. 10th Street
Indianapolis, In 46202

CONSULTANTS:
BAYSINGER DESIGN GROUP
401 North Market Street
Marion, Illinois 62959
Telephone 618.998.8015
Fax 618.998.8032

CERTIFIED BY:
STATE OF MICHIGAN ASLAM MUKHTAR HUSAIN ENGINEER No. 6201035544 LICENSED PROFESSIONAL ENGINEER

ARCHITECT/ENGINEERS:
AMERICAN STRUCTUREPOINT INC.
7260 Shadeland Station | Indianapolis, Indiana 46256
TEL 317.547.5580 | FAX 317.543.0270
www.structurepoint.com

EnerTronics ENERGY TO EXCEL
Engineering Corporation
The Fairmont Building
9245 Calumet Ave. Suite 205,
Munster, IN 46321
(219) 836-2120 Fax (219) 836-1129

Drawing Title: 4TH FLOOR MECHANICAL BLOCK DIAGRAM AND HVAC BALANCING SHEET	Project Title: RENOVATE FOR CLINICAL IMPROVEMENTS			Project Number: 583C16254
				Building Number: 1
PROJECT ENGINEER: Mary Piwowarski	Approved: Engineering Chief	Location: 3 WEST - C WING & 4 EAST - C WING		Drawing Number: MH-601
SCALE: 1/8"=1'-0"	Approved: Service Chief	Date: MAY 14, 2012	Checked: DR/AMH / Drawn: DS	3FY12

BID DOCUMENTS

Engineering and Facilities Management Services

Department of Veterans Affairs

RLR VAMC FORM 09-JD0227

PLOT DATE 05/14/2012 12:17 PM
CAD DRAWING FILE LOCATION Z:\1 PROJECTS\1051 CLINICAL IMPROVEMENTS INDIANAPOLIS VA\PRE-BID RFI\BID DOCUMENTS REVISION\MH-601.DWG

Specifications
23 73 00 Indoor Central Air Handling Units

UNIT	Airflow (RATED)	Unit Size WXHXL in.	Unit Base	Insulation Panel Wall Type	Coil Drain Pan	Weight installed	Control Systems Package	Electrical Systems Package	Lighting Systems Package	Manufacturer
AHU-58	13,311 cfm (RATED)	62X87X160 in.	6" integral base frame	double wall metal w/3" foam insulation	stainless steel double wall w/3" foam insulation	5,866 lbs	Mounted Remotely provided by Controls System	115v GFCI mounted per specification	LED lights per specification mounted in sections as listed	TMI or Approved Equal

AHU-ACCESS SECTION-MODULE 1

Module Position	Module Type	DOOR SIZE	ACCESS DOOR LOCATION	DOOR SWING	Front Air Path Type	Back Opening Type	Back Air Path Type	Top Inlet Size (WxL)
INLET RETURN	Access Section	18WX72H	RIGHT & LEFT	OUTWARD	FULL OPEN FACE	NONE	Return	Damper internal Ducted D-2 21wX48L

AIR FILTER SCHEDULE MODULE 2

MARK	AREA AND/OR BLDG SERVED	SYSTEM AND/OR SERVICE	MERV RATING	AIR FLOW	APD INITIAL	APD FINAL	HOUSING TYPE	CARTRIDGES #	CARTRIDGES SIZE	CARTRIDGES ARRANGEMENT	REMARKS
				CFM	IN WG	IN WG			IN		
PF-58	3 WEST	AHU-58	8	11300	0.25	0.85	FRONT	6	24 x 24 x 2	2 WIDE BY 3 HIGH	FARR OR APPROVED EQUAL

CHILLED WATER COOLING COIL SCHEDULE MODULE 3

MARK	SYSTEM AND/OR SERVICE	AIR FLOW	MAX FACE VELOCITY	APD	EAT Db	EAT Wb	LAT Db	LAT Wb	TOTAL CAPACITY	SENSIBLE CAPACITY	CHILLED WATER FLOW	CHILLED WATER EWT	CHILLED WATER LWT	CHILLED WATER WPD	REMARKS
		CFM	FPM	IN WG	°F	°F	°F	°F	MBH	MBH	GPM	°F	°F	FT	
CC-58	AHU-58	11300	497	0.57	75	67	54	62	380	270	47	43	55.52	3.52	-----

AHU-ACCESS SECTION/WALKTHRU - MODULE 4

Module Position	Module Type	DOOR SIZE	ACCESS DOOR LOCATION	DOOR SWING & HAND	Front Air Path Type	Back Air Path Type	Top Inlet Size (WxL)
INTLET OUTSIDE AIR	Access Section	18WX72H	RIGHT & LEFT	OUTWARD BOTH	FULL OPEN FACE	Entering	Damper internal D-1A Ducted 12wX30L

FAN SECTION MODULE 5

MARK	AREA AND/OR BLDG SERVED	SYSTEM AND/OR SERVICE	AIR FLOW	TSP	External Static Pressure suction	External Static Pressure discharge	External Static Pressure total ESP	FAN TYPE	FAN MIN % EFF	FAN DRIVE	FAN MAX RPM	MOTOR ELECTRICAL NOMINAL POWER BHP	MOTOR ELECTRICAL NOMINAL POWER HP	MOTOR ELECTRICAL PHASE	MOTOR ELECTRICAL VOLT	MOTOR ELECTRICAL RPM	MOTOR ELECTRICAL SPEED CONTROL	VFD setting
			CFM	IN	IN	IN	IN											
RF-58	3 WEST	AHU-58	13311	7	3	3	6	VANEAXIAL	94%	DIRECT	4245	21.84	5x6	3	480	3450	VARIABLE	68 Hz

AHU-ACCESS SECTION - MODULE 6

Module Position	Module Type	DOOR SIZE	ACCESS DOOR LOCATION	DOOR SWING	Front Air Path Type	Back Air Path Type	Top Inlet Size (WxL)
OUTLET SUPPLY	Access Section	24X72	RIGHT & LEFT	INWARD RHH	NONE	Leaving	Ducted 21wX48L

UNIT	Airflow (RATED)	Unit Size WXHXL in.	Unit Base	Insulation Panel Wall Type	Weight installed	Control Systems Package	Electrical Systems Package	Lighting Systems Package	Manufacturer
EF-23	6,000 cfm (RATED)	62X87X141 in.	6" integral	3" foam	7,155 lbs	Remotely Mounted	None	LED lights per specification mounted	TMI or Approved Equal

AHU-ACCESS SECTION - MODULE 1

Module Position	Module Type	UNIT SIZE	ACCESS DOOR LOCATION	DOOR SWING	Front Air Path Type	Back Opening Type	Back Air Path Type	Top Inlet Size (WxL)
INLET	Access Section	23WX78H	RIGHT 18WX72H	OUTWARD	Leaving	FULL OPEN FACE	EXHAUST	Damper internal D-3 Ducted 12.75wX48L

FAN SECTION MODULE 2

MARK	AREA AND/OR BLDG SERVED	SYSTEM AND/OR SERVICE	AIR FLOW	TSP	External Static Pressure suction	External Static Pressure discharge	External Static Pressure total ESP	FAN TYPE	FAN MIN % EFF	FAN DRIVE	FAN MAX RPM	MOTOR ELECTRICAL NOMINAL POWER BHP	MOTOR ELECTRICAL NOMINAL POWER HP	MOTOR ELECTRICAL PHASE	MOTOR ELECTRICAL VOLT	MOTOR ELECTRICAL RPM	MOTOR ELECTRICAL SPEED CONTROL	VFD setting
			CFM	IN	IN	IN	IN											
EF-23	3 WEST	EF-23	6000	7	6.68			VANEAXIAL	94%	DIRECT	3600	4.71X2	5x2	3	480	3450	VARIABLE	61 Hz

AHU-ACCESS SECTION - MODULE 4

Module Position	Module Type	UNIT SIZE	ACCESS DOOR LOCATION	DOOR SWING	Front Air Path Type	Back Opening Type	Back Air Path Type
HEPA Access	Access Section	24WX72H	RIGHT	INWARD	Entering	Leaving	EXHAUST

AIR FILTER SCHEDULE MODULE 4

MARK	AREA AND/OR BLDG SERVED	SYSTEM AND/OR SERVICE	MERV RATING	AIR FLOW	APD INITIAL	APD FINAL	HOUSING TYPE	CARTRIDGES #	CARTRIDGES SIZE	CARTRIDGES ARRANGEMENT	REMARKS
				CFM	IN WG	IN WG			IN		
HF-23	3 WEST EMERGENCY PANDEMIC	EF-23	17(99.97)	11300	1.27	2.83	FRONT	6	24 x 24 x 12	2 WIDE BY 3 HIGH	FARR OR APPROVED EQUAL

AHU-ACCESS SECTION (PART HEPA FILTER MODULE 4)

Module Position	Module Type	UNIT SIZE	ACCESS DOOR LOCATION	DOOR SWING	Front Air Path Type	Back Opening Type	Back Air Path Type
Access	Access Section	12WX72H	NONE	NONE	NONE	Leaving	FIELD CUT ACCESS IN CASING FOR EXAUST AIR DUCT CONNECTION TO LOUVER

Specification
23 82 00 - CONVECTION HEATING AND COOLING UNITS
23 36 00 - SINGLE AIR TERMINAL UNITS

3rd Floor VAV SINGLE DUCT AIR TERMINAL UNIT SCHEDULE

MARK	DUCT INLET SIZE Note 5	AIR FLOW MAX	AIR FLOW MIN (IC OR 50%)	HOT WATER HEATING COIL FLOW	HOT WATER HEATING COIL Reheat Load	HOT WATER HEATING COIL PIPE RUNOUT SIZE TO COIL	PERIMETER SUPPLEMENTAL HEAT LINK
	IN	CFM	CFM	GPM	BTUH	IN	
VAV3-1	NOT USED						
VAV3-1A	NOT USED						
VAV3-2	5	148	76	0.38	1768	0.375	RADIANT CEILING PANEL
VAV3-3	6	287	189	0.74	4415	0.375	RADIANT CEILING PANEL
VAV3-3a	6	278	214	0.72	4995	0.375	RADIANT CEILING PANEL
VAV3-4	8	350	188	0.91	4395	0.375	RADIANT CEILING PANEL
VAV3-5	6	228	190	0.59	4434	0.375	None
VAV3-6	8	357	298	0.93	6945	0.375	None
VAV3-7	6	300	99	0.78	2304	0.375	RADIANT CEILING PANEL
VAV3-8	6	311	105	0.81	2459	0.375	RADIANT CEILING PANEL
VAV3-9	6	304	102	0.79	2382	0.375	RADIANT CEILING PANEL
VAV3-10	6	305	102	0.79	2382	0.375	RADIANT CEILING PANEL
VAV3-11	6	309	108	0.80	2517	0.375	RADIANT CEILING PANEL
VAV3-12	8	336	107	0.87	2498	0.375	RADIANT CEILING PANEL
VAV3-13	6	305	108	0.79	2517	0.375	RADIANT CEILING PANEL
VAV3-14	6	287	107	0.75	2498	0.375	RADIANT CEILING PANEL
VAV3-15	6	284	102	0.74	2382	0.375	RADIANT CEILING PANEL
VAV3-16	6	284	102	0.74	2382	0.375	RADIANT CEILING PANEL
VAV3-17	6	282	104	0.73	2420	0.375	RADIANT CEILING PANEL
VAV3-18	6	297	116	0.77	2717	0.375	RADIANT CEILING PANEL
VAV3-19	8	359	299	0.93	6975	0.375	None
VAV3-20	5	200	111	0.52	2595	0.375	None
VAV3-21	8	475	158	1.23	3692	0.375	RADIANT CEILING PANEL
VAV3-22	8	464	381	1.20	8885	0.375	None
VAV3-23	5	191	105	0.50	2440	0.375	RADIANT CEILING PANEL
VAV3-24	6	274	85	0.71	1988	0.375	RADIANT CEILING PANEL
VAV3-25	6	201	168	0.52	3911	0.375	RADIANT CEILING PANEL
VAV3-26	8	352	236	0.91	5499	0.375	RADIANT CEILING PANEL
VAV3-27	10	600	219	1.55	5118	0.375	RADIANT CEILING PANEL
VAV3-28	10	571	166	1.48	3866	0.375	RADIANT CEILING PANEL
VAV3-29	8	500	193	1.29	4498	0.375	RADIANT CEILING PANEL
VAV3-30	6	305	148	0.79	3446	0.375	RADIANT CEILING PANEL

NOTES

1. AIR TERMINAL UNIT WITH VAV CONTROLLER BY CONTROLS
2. CONTROL SEQUENCE SHALL BE SELECTED FOR 5 DEGREE DEADBAND
3. SELECTED TERMINAL UNITS HEATING COILS AT 180 DEG F ENTERING WATER 1 ROW 1 CIRCUIT EACH.
4. SELECTED UNIT BY JOHNSON CONTROLS TSL-WC OR APPROVED EQUAL
5. DUCT INLET SIZE SHOWN IS FROM THE MAIN TO THE VAV BOX. CONNECTION TO THE VAV BOX SHALL BE PER MANUFACTURER.
6. REHEAT HOT WATER COIL BASIS ENTERING AIR TEMP. 72DEG F, LEAVING AIR TEMP. 90DEG F, WATER TEMP
7. RADIANT COIL BASIS 760 BTUHR, 0.1562 GPM/PANEL @ 10 DEG F DIFFERENTIAL.

HVAC FANS
REF. DWG MH-102, MH-402,403 Specification 23-34-00

MARK # & LOCATION	SYSTEM	LOCATION	FLOW RATED (CFM)	E.S.P/S.P. IN WG.	Model/Size	DRIVE	MOTOR DATA WATTS/HP	MOTOR DATA SPEED	MOTOR DATA VOLT	MOTOR DATA PHASE	Preferred Vendor
EF-203	GENERAL	CEILING ROOM C-3191	1181	1.0	CSP-A1410	DIRECT	822	1450	120	1	GREENHECK CSP OR APPROVED EQUAL WITH INTEGRAL BACKDRAFT DAMPER IN OUTLETS WITH SPEED CONTROLLER AND PLUG-IN DISCONNECT SWITCH OR APPROVED EQUAL
EF-204	GENERAL	CEILING ROOM C-3193	334	.625	CSP-A710	DIRECT	325	1080	120	1	
EF-205	GENERAL	CEILING ROOM C-3150	1181	1.0	CSP-A1410	DIRECT	822	1450	120	1	

THE VALUES OF HP, FLOW(CFM), GPM ARE INDICATIVE OF RATED OR MAXIMUM CAPACITY.
FOR ACTUAL CONTROL POINTS FOLLOW SEQUENCE OF OPERATIONS AND OTHER CONTROL DESCRIPTIONS ELSEWHERE.

VOLUME AND CONTROL DAMPERS REF. DWG MH-400 to 403 & MH-405 & MH-407

Damper No.	Size	Qty.	Type DAMPER	Outdoor	Manufacturer	Remarks
FD-1	10 X8.125	1	1 HR FIRE	No	Ruskin or Approved Equal	3rd FLOOR SOILED UTILITY ROOM C-3170 SUPPLY
FD-2	6"ø	1	1 HR FIRE	No	Ruskin or Approved Equal	3rd FLOOR SOILED UTILITY ROOM C-3166 SUPPLY
FD-3	4"ø	1	1 HR FIRE	No	Ruskin or Approved Equal	3rd FLOOR SOILED UTILITY ROOM C-3170 EXHAUST
FD-4	4"ø	1	1 HR FIRE	No	Ruskin or Approved Equal	3rd FLOOR SOILED UTILITY ROOM C-3166 EXHAUST
FD-5	10 X8.125	1	1 HR FIRE	No	Ruskin or Approved Equal	4TH FLOOR SOILED UTILITY ROOM C-4014 SUPPLY
FD-6	6"ø	1	1 HR FIRE	No	Ruskin or Approved Equal	4TH FLOOR SOILED UTILITY ROOM C-4014 EXHAUST
D-1A	24W x 12H	1	AUTOMATIC	No	GREENHECK or Approved Equal	3RD FLOOR MECHANICAL ROOM C-3152 OUTSIDE AIR
D-1B	29W x 12H	1	AUTOMATIC	No	GREENHECK or Approved Equal	4TH FLOOR MECHANICAL ROOM C-4033 OUTSIDE AIR
D-3	24W x 10H	1	AUTOMATIC	No	GREENHECK or Approved Equal	4th FLOOR MECHANICAL ROOM C-4033 RELIEF AIR
D-4	30W x 8H	1	AUTOMATIC	No	GREENHECK or Approved Equal	3RD FLOOR CEILING ABOVE C-3150A EXHAUST AIR

1 INTEGRAL TO AHU

1 ADDED FOR EF-206

Control Valves

Control Valve #	QTY	SERVICE	Elec Coil Control Valve Type	Elec Coil Control Valve Size	ELECTRICAL POWER REQUIREMENT	TRANSFORMER SIZING	MANUFACTURER	REFERENCE
FCV-1	1(3rd FLR)	CHILLED WATER	2 - WAY Modulating VALVE		24VAC ± 20%, 60HZ 24VDC ± 10%, 60HZ	10 VA	BELIMO OR EQUAL	1/MH-501, MP-100
FCV-2	1(4th FLR)							1/MH-501, MP-101
FCV-3	1(3rd FLR)	STEAM	2 - WAY Modulating Actuator	1" NPT	24VAC ± 20%, 60HZ 24VDC ± 10%, 60HZ	5 VA	BELIMO OR EQUAL	MH-600, MP-100
FCV-4A FCV-4B FCV-4C	1(4th FLR) 1(4th FLR) 1(4th FLR)							MH-601 MP-101
CV-1	30(3rd FLR) 33(4th FLR)	HOT WATER HEATING SUPPLY	2 - WAY Modulating Actuator	3/8" NPT	2.5W RUNNING 1W HOLDING 4-20 mA	5 VA	BELIMO OR EQUAL	MP-100 MP-101 MI-601 MI-603
CV-2	25(3rd FLR) 28(4th FLR)	HOT WATER HEATING SUPPLY RADIANT PANELS	2 - WAY Modulating Actuator	1/2" NPT	2.5W RUNNING 1W HOLDING 4-20 mA	5 VA	BELIMO OR EQUAL	MP-100 MP-101 MI-601 MI-603

PRESSURE INDICATING MONITORS AND PRESSURE SENSOR

MARK	Type	LOW ALARM CONTACTS	DISPLAY RANGE IN W.C.	LOW ALARM RANGE IN W.C.	HIGH ALARM RANGE IN W.C.	ELECTRICAL SUPPLY	OPERATING TEMPERATURE	POWER DISSIPATION	MANUFACTURER
PIT1	PRESSURE INDICATING MONITORS ONE NEW WITH BACNET CONNECTIONS	MAX CURRENT: 5A MAX VOLTAGE: 150VDC,250VAC MIN SWITCH : 10mA,5VDC	-0.2 TO +0.2	-0.195 TO +0.195	-0.195 TO +0.195	24V, 5W MAX	32 TO 120 °F	--	TSI MODEL 8630-PM-BAC WITH 120:24 VAC TRANSFORMER
PS1 PS2	PRESSURE SENSOR ONE EXISTING ONE NEW	--	-0.2 TO +0.2	--	--	--	55 TO 95 °F	0.16W @ 0 IN W.C. 0.2W @ 0.001 IN W.C.	WITH TSI MODEL 8630-PM

NOTES:
1. INSTALLATION CONTRACTOR SHALL PROCURE, CONSTRUCT AND COMMISSION AND INSTALL REQUIRED ADDITIONAL AUXILIARIES THAT ARE NOT LISTED HERE AND FOLLOW MANUFACTURERS RECOMMENDATIONS FOR A FULLY FUNCTIONAL SYSTEM.

65% SUBMITTAL SET	01.07.2012
95% SUBMITTAL SET	03.07.2012
BID DOCUMENTS SUBMITTAL SET	05.14.2012
REVISION - MODIFIED AHU-58 ARRANGEMENT AND DATA	8-28-2012
REVISION - MODIFIED EF-23 PERFORMANCE DATA	8-28-2012
REVISION - REVISED DAMPER SCHEDULE	8-28-2012
Revisions:	Date

RLR VAMC FORM 09-JD0227

Dept. of Veterans Affairs
Richard L. Roudebush
VA Medical Center
1481 W. 10th Street
Indianapolis, In 46202

CONSULTANTS:
BAYSINGER DESIGN GROUP
401 North Market Street
Marion, Illinois 62959
Telephone 618.998.8015
Fax 618.998.8032

CERTIFIED BY:
STATE OF MICHIGAN ASLAM MUKHTAR HUSAIN ENGINEER No. 6201035544 REGISTERED PROFESSIONAL ENGINEER

ARCHITECT/ENGINEERS:
AMERICAN STRUCTUREPOINT INC.
7260 Shadeland Station | Indianapolis, Indiana 46256
TEL 317.547.5580 | FAX 317.543.0270
www.structurepoint.com

EnerTronics ENERGY TO EXCEL
Engineering Corporation
The Fairmont Building
9245 Calumet Ave. Suite 205,
Munster, IN 46321
(219) 836-2120 Fax (219) 836-1129

Drawing Title: MECHANICAL SCHEDULES SHEET 1 OF 4	Project Title: RENOVATE FOR CLINICAL IMPROVEMENTS	Project Number: 583C16254	
		Building Number: 1	
PROJECT ENGINEER: Mary Piwowarski	Approved Engineering Chief	Location: 3 WEST - C WING & 4 EAST - C WING	Drawing Number: MH-603
SCALE: 1/8"=1'-0"	Approved Service Chief	Date: MAY 14, 2012 / Checked: DR/AMH / Drawn: DS	3FY12

BID DOCUMENTS

Engineering and Facilities Management Services

Department of Veterans Affairs

PLOT DATE: 5/29/2012 2:23 PM
CAD DRAWING FILE LOCATION: Z:\1 PROJECTS\1051 CLINICAL IMPROVEMENTS INDIANAPOLIS VA\BID DOCUMENTS REVISION\MH-603.DWG

Specification
23 82 00 – CONVECTION HEATING AND COOLING UNITS
23 36 00 – SINGLE AIR TERMINAL UNITS

Specifications
23 73 00 Indoor Central Air Handling Units

UNIT	Airflow (RATED)	Unit Size WXHXL in.	Unit Base	Insulation Panel Wall Type	Coil Drain Pan	Weight installed	Control Systems Package	Electrical Systems Package	Lighting Systems Package	Manufacturer
AHU–59	14,000 cfm (RATED)	62X87X160 in.	6" integral base frame	double wall metal w/3" foam insulation	stainless steel double wall w/3" foam insulation	6,875 lbs	Mounted Remotely provided by Controls System	115v GFCI mounted per specification	LED lights per specification mounted in sections as listed	TMI or Approved Equal

AHU–ACCESS SECTION–MODULE 1

Module Position	Module Type	DOOR SIZE	ACCESS DOOR LOCATION	DOOR SWING	Front Air Path Type	Back Opening Type	Back Air Path Type	Top Inlet Size (WxL)
INLET RETURN AIR	Access Section	18WX72H	RIGHT	OUTWARD	NONE	FULL OPEN FACE	Return	Damper internal D–2 Ducted 21wX48L

AIR FILTER SCHEDULE MODULE 2

MARK	AREA AND/OR BLDG SERVED	SYSTEM AND/OR SERVICE	MERV RATING	AIR FLOW	APD		HOUSING TYPE	CARTRIDGES			REMARKS
					INITIAL	FINAL		#	SIZE	ARRANGEMENT	
				CFM	IN WG	IN WG			IN		
PF-59	4 EAST	AHU-59	8	11000	0.24	0.82	FRONT	6	24 x 24 x 2	2 WIDE BY 3 HIGH	FARR OR APPROVED EQUAL

CHILLED WATER COOLING COIL SCHEDULE MODULE 3

MARK	SYSTEM AND/OR SERVICE	AIR FLOW	MAX FACE VELOCITY	APD	EAT		LAT		TOTAL CAPACITY	SENSIBLE CAPACITY	CHILLED WATER				REMARKS
					Db	Wb	Db	Wb			FLOW	EWT	LWT	WPD	
		CFM	FPM	IN WG	°F	°F	°F	°F	MBH	MBH	GPM	°F	°F	FT	
CC-59	AHU-59	11000	489	0.56	75	62	55	54	380	270	45	43	55.52	4	-----

AHU–ACCESS SECTION/WALKTHRU – MODULE 4

Module Position	Module Type	DOOR SIZE	ACCESS DOOR LOCATION	DOOR SWING	Front Air Path Type	Back Air Path Type	Top Inlet Size (WxL)
INTLET OUTSIDE AIR	Access Section	24WX66H	RIGHT & LEFT	INWARD	FULL OPEN FACE	Entering	Damper external D–1B Ducted 21wX48L

FAN SECTION MODULE 5

MARK	AREA AND/OR BLDG SERVED	SYSTEM AND/OR SERVICE	AIR FLOW	TSP	External Static Pressure			FAN				MOTOR ELECTRICAL						VFD setting
					suction	discharge	total ESP	TYPE	MIN % EFF	DRIVE	FAN MAX RPM	NOMINAL POWER		PHASE	VOLT	RPM	SPEED CONTROL	
			CFM	IN	IN	IN	IN					BHP	HP					
RF-59	4 EAST	AHU-59	14000	7	3	3	6	VANEAXIAL	93%	DIRECT	4245	22.02	5x6	3	480	3450	VARIABLE	68 Hz

AHU–ACCESS SECTION – MODULE 6

Module Position	Module Type	DOOR SIZE	ACCESS DOOR LOCATION	DOOR SWING	Front Air Path Type	Back Air Path Type	Top Inlet Size (WxL)
OUTLET SUPPLY AIR	Access Section	24WX72H	RIGHT & LEFT	INWARD	NONE	Entering	Ducted 21wX48L

1

FAN SECTION

MARK	AREA AND/OR BLDG SERVED	SYSTEM AND/OR SERVICE	AIR FLOW	TSP	FAN			MOTOR ELECTRICAL					
					TYPE	MIN % EFF	DRIVE	NOMINAL POWER		PHASE	VOLT	RPM	SPEED CONTROL
			CFM	IN				BHP	HP				
EF-206	4 EAST	AHU-59	3600	4	mixed flow	94%	DIRECT	3.68	5	3	480	3615	VARIABLE

1

VARIABLE FREQUENCY DRIVES

TAG	LOCATION	EQUIPMENT SERVING	VOLTAGE	REMARKS
VFD-1	3RD FLOOR MECHANICAL ROOM C-3152	AHU-58	277/480V, 3 PHASE, 4 WIRE WITH BYPASS ISOLATION	--
VFD-2	3RD FLOOR MECHANICAL ROOM C-3152	EF-23	277/480V, 3 PHASE, 4 WIRE WITH BYPASS ISOLATION	--
VFD-3	4TH FLOOR MECHANICAL ROOM C-4033	AHU-59	277/480V, 3 PHASE, 4 WIRE WITH BYPASS ISOLATION	--
VFD-4	4TH FLOOR MECHANICAL ROOM C-4033	EF-28	277/480V, 3 PHASE, 4 WIRE WITH BYPASS ISOLATION	MECHANICAL OR ELECTRICAL SUB CONTRACTOR TO SPECIFY VFD READY MOTOR. MOTOR SHALL BE 1½ HP, 460V /3 PH, HIGH EFFICIENT RATED AT 1720 RPM. SEE EP-101 AND EP-600
VFD-5	10TH FLOOR MECHANICAL ROOM	PUMPS P-3 AND P-4	277/480V, 3 PHASE, 4 WIRE WITH BYPASS ISOLATION	--
VFD-6	4TH FLOOR MECHANICAL ROOM C-4033	EF-206	277/480V, 3 PHASE, 4 WIRE WITH BYPASS ISOLATION	--

1

4TH Floor VAV SINGLE DUCT AIR TERMINAL UNIT SCHEDULE

MARK	DUCT INLET SIZE Note 5	AIR FLOW		HOT WATER HEATING COIL			PERIMETER SUPPLEMENTAL HEAT LINK
		MAX	MIN (IC OR 50%)	FLOW	Reheat Load	PIPE RUNOUT SIZE TO COIL	
	IN	CFM	CFM	GPM	BTUH	IN	
VAV4-1	8	504	385	1.31	8982	0.375	RADIANT CEILING PANEL
VAV4-1A	8	382	318	0.99	7426	0.375	RADIANT CEILING PANEL
VAV4-2	6	282	220	0.73	5140	0.375	RADIANT CEILING PANEL
VAV4-3	6	294	157	0.76	3666	0.375	RADIANT CEILING PANEL
VAV4-4	10	633	238	1.64	5543	0.375	RADIANT CEILING PANEL
VAV4-5	6	271	226	0.70	5266	0.375	None
VAV4-6	6	282	220	0.73	5140	0.375	RADIANT CEILING PANEL
VAV4-7	6	283	100	0.73	2343	0.375	RADIANT CEILING PANEL
VAV4-8	6	288	106	0.75	2475	0.375	RADIANT CEILING PANEL
VAV4-9	6	286	101	0.74	2362	0.375	RADIANT CEILING PANEL
VAV4-10	6	280	96	0.73	2230	0.375	RADIANT CEILING PANEL
VAV4-11	6	284	98	0.73	2286	0.375	RADIANT CEILING PANEL
VAV4-12	6	293	93	0.76	2173	0.375	RADIANT CEILING PANEL
VAV4-13	8	333	104	0.86	2438	0.375	RADIANT CEILING PANEL
VAV4-14	6	305	102	0.79	2381	0.375	RADIANT CEILING PANEL
VAV4-15	6	313	107	0.81	2494	0.375	RADIANT CEILING PANEL
VAV4-16	6	303	103	0.79	2400	0.375	RADIANT CEILING PANEL
VAV4-17	12	867	192	2.25	4478	0.375	RADIANT CEILING PANEL
VAV4-18	8	433	329	1.02	7677	0.375	None
VAV4-19	4	95	60	0.25	1398	0.375	None
VAV4-20	8	474	136	1.23	3174	0.375	RADIANT CEILING PANEL
VAV4-21	6	190	109	0.49	2532	0.375	RADIANT CEILING PANEL
VAV4-22	6	191	110	0.50	2570	0.375	RADIANT CEILING PANEL
VAV4-23	6	190	110	0.49	2570	0.375	RADIANT CEILING PANEL
VAV4-24	6	189	109	0.49	2532	0.375	RADIANT CEILING PANEL
VAV4-25	10	609	135	1.58	3143	0.375	RADIANT CEILING PANEL
VAV4-26	8	323	104	0.84	2438	0.375	RADIANT CEILING PANEL
VAV4-27	8	333	97	0.86	2267	0.375	RADIANT CEILING PANEL
VAV4-28	8	573	150	1.48	3508	0.375	RADIANT CEILING PANEL
VAV4-29	8	540	151	1.40	3515	0.375	RADIANT CEILING PANEL
VAV4-30	8	373	111	0.97	2582	0.375	RADIANT CEILING PANEL
VAV4-31	6	271	226	0.70	5266	0.375	None
VAV4-32	8	322	269	0.84	6267	0.375	None

NOTES

1. AIR TERMINAL UNIT WITH VAV CONTROLLER BY CONTROLS
2. CONTROL SEQUENCE SHALL BE SELECTED FOR 5 DEGREE DEADBAND
3. SELECTED TERMINAL UNITS HEATING COILS AT 180 DEG F ENTERING WATER 1 ROW 1 CIRCUIT EACH.
4. SELECTED UNIT BY JOHNSON CONTROLS TSL-WC OR APPROVED EQUAL
5. DUCT INLET SIZE SHOWN IS FROM THE MAIN TO THE VAV BOX. CONNECTION TO THE VAV BOX SHALL BE ADJUSTED PER MANUFACTURER.
6. REHEAT HOT WATER COIL BASIS ENTERING AIR TEMP. 72DEG F, LEAVING AIR TEMP. 90DEG F, WATER TEMP
7. RADIANT COIL BASIS 760 BTU/HR, 0.1562 GPM/PANEL @ 10 DEG F DIFFERENTIAL.

NOTES:
1. INSTALLATION CONTRACTOR SHALL PROCURE, CONSTRUCT AND COMMISSION AND INSTALL REQUIRED ADDITIONAL AUXILIARIES THAT ARE NOT LISTED HERE AND FOLLOW MANUFACTURERS RECOMMENDATIONS FOR A FULLY FUNCTIONAL SYSTEM.

Revisions:	Date
65% SUBMITTAL SET	01.07.2012
95% SUBMITTAL SET	03.07.2012
BID DOCUMENTS SUBMITTAL SET	05.14.2012
REVISION - CORRECTED AHU-59 ARRANGEMENT	8-28-2012
REVISION - ADDED EF-206 AND VFD-6 FOR EF-206	8-28-2012

Dept. of Veterans Affairs
Richard L. Roudebush
VA Medical Center
1481 W. 10th Street
Indianapolis, In 46202

CONSULTANTS:

BAYSINGER DESIGN GROUP
401 North Market Street
Marion, Illinois 62959
Telephone 618.998.8015
Fax 618.998.8032

CERTIFIED BY:

STATE OF MICHIGAN
ASLAM MUKHTAR HUSAIN
ENGINEER No. 6201035544
REGISTERED PROFESSIONAL ENGINEER

ARCHITECT/ENGINEERS:

AMERICAN STRUCTUREPOINT INC.
7260 Shadeland Station | Indianapolis, Indiana 46256
TEL 317.547.5580 | FAX 317.543.0270
www.structurepoint.com

EnerTronics ENERGY TO EXCEL
Engineering Corporation
The Fairmont Building
9245 Calumet Ave. Suite 205,
Munster, IN 46321
(219) 836-2120 Fax (219) 836-1129

Drawing Title: 4TH FLOOR MECHANICAL SCHEDULES SHEET 2 OF 4		Project Title: RENOVATE FOR CLINICAL IMPROVEMENTS		Project Number: 583C16254	BID DOCUMENTS
				Building Number: 1	Engineering and Facilities Management Services
PROJECT ENGINEER: Mary Piwowarski	Approved: Engineering Chief	Location: 3 WEST - C WING & 4 EAST - C WING		Drawing Number: MH-604	
SCALE: 1/8"=1'-0"	Approved: Service Chief	Date: MAY 14, 2012	Checked: DR/AMH / Drawn: DS	3FY12	Department of Veterans Affairs

RLR VAMC FORM 09–JD0227

PLOT DATE: 5/29/2012 2:17 PM
CAD DRAWING FILE LOCATION: Z:\I PROJECTS\1051 CLINICAL IMPROVEMENTS INDIANAPOLIS VA\BID DOCUMENTS REVISION5\MH-604.DWG

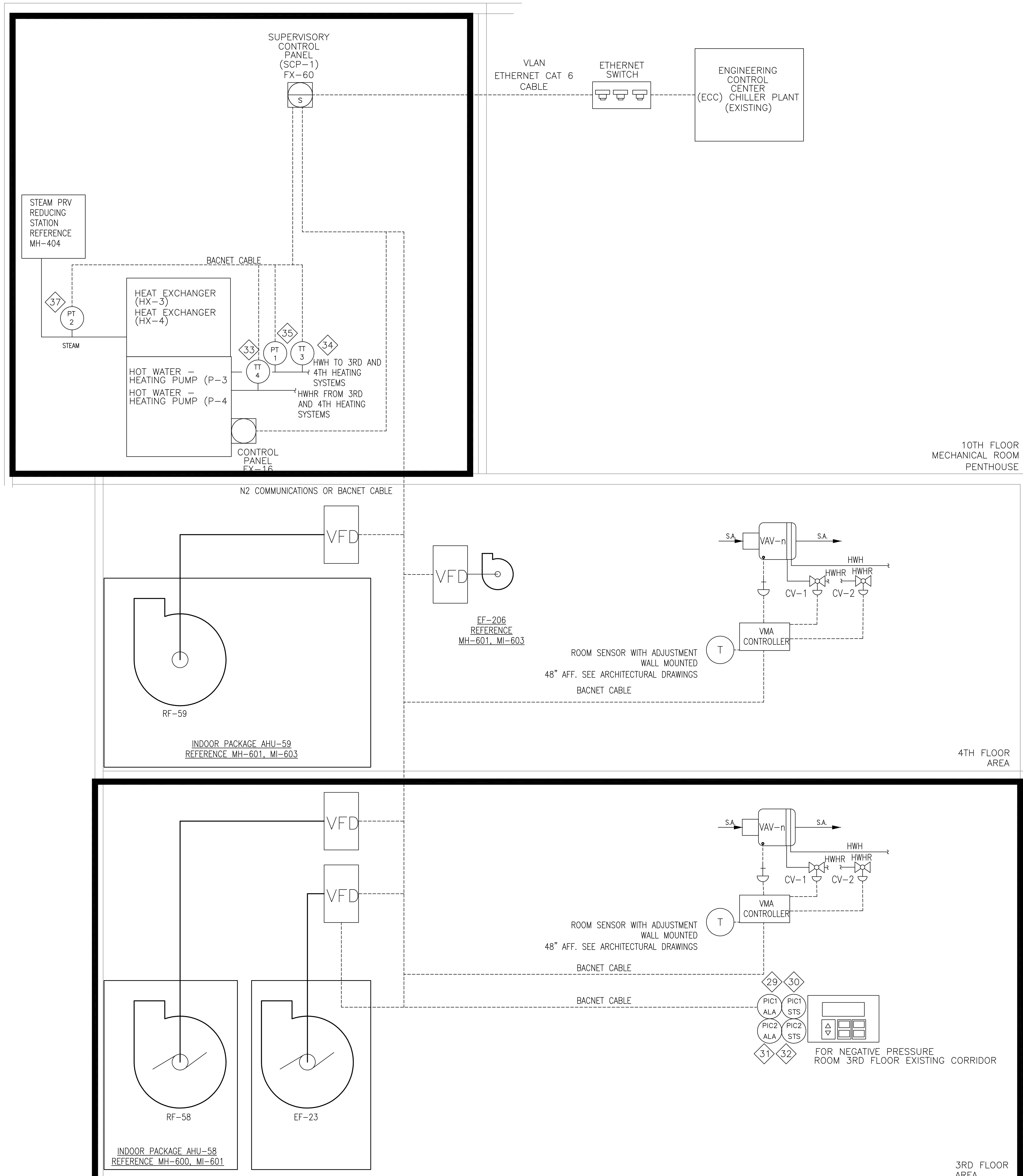

1 MI600 SYSTEM CONTROL DIAGRAM
NTS

VA RLR VAMC
BUILDING 1: 3rd and 10TH FLOOR CLINICAL IMPROVEMENTS
SAMPLE POINTS LIST

SYSTEMS:
HVAC AIR HANDLER UNITS AHU-58 AND VFD
EXHAUST FAN EF-23 (VFD), 203, 204, 205
VAV RE-HEAT AND RADIANT HOT WATER
HEATING, PUMPS P-3, P-4
STEAM DISTRIBUTION, RELATIVE HUMIDITY
HEAT EXCHANGERS AND CONTROL
MAKE UP FILL AND SENSING

PAGE:

Point legend and system outputs / system inputs (binary)

SYSTEM COMPONENT	POINT ID	ABBREVIATION	POINT LEGEND: PRIORITY/ADD-ALTERNATE NO.	POINT LEGEND: --	OUTPUTS BINARY: ELECTRIC DEVICE	OUTPUTS BINARY: START/STOP	OUTPUTS BINARY: OPEN/CLOSE	OUTPUTS BINARY: --	OUTPUTS ANALOG: SPEED COMMAND	OUTPUTS ANALOG: VALVE POSITION	OUTPUTS ANALOG: DAMPER POSITION	INPUTS BINARY: STATUS	INPUTS BINARY: ALARM	INPUTS BINARY: PRESSURE	INPUTS BINARY: HIGH HUMIDITY	INPUTS BINARY: HIGH STATIC PRESSURE	INPUTS BINARY: LOW TEMPERATURE	INPUTS BINARY: --
Return air Temperature	1	TT-2											●					
Return Air Flow RF-58 (cfm)	2	FT-3											●					
Mixed air Temperature	3	TT-1											●					
OUTSIDE AIR FLOW (cfm)	4	FT-1											●					
MIXED AIR FLOW (cfm)	5	FT-2											●					
EF-203,204,205 EXHAUST Air Flow	6	FT-4										●	●					
FAN RF-58 VFD STATUS/ALARM	7	RF-STS										●	●					
RETURN FAN RF-58 VFD SPEED	8	RF-SPD							●			●	●					
RETURN FAN RF-58 START/STOP	9	RF-SST				●												
OUTSIDE AIR DAMPER	10	D-1									●							
EF-23 EXHAUST AIR DAMPER	11	D-3									●							
AHU-58 RETURN AIR DAMPER	12	D-2									●							
FILTER PF-58 PRESSURE DIFFERENTIAL	13	AI-1																
CC-58 COOLING VALVE FCV-1	14	FCV-1								●								
Cooling Coil Temperature	15	CCT											●					
Discharge Static Pressure	16	AI-2											●					
RETURN Air PRESSURE	17	AI-3											●	●				
MIXED AIR LOW TEMPERATURE LIMIT	18	TSL-1															●	
SUPPLY AIR STATIC PRESSURE	19	SPS-2											●			●		
FAN EF-23 VFD STATUS/ALARM	20	EF-STS										●	●					
FAN EF-23 VFD SPEED	21	EF-SPD							●			●	●					
FAN EF-23 START/STOP	22	EF-SST				●												
(VAV TERMINAL UNIT TYPICAL FOR 32 UNITS)																		
VAV TERMINAL UNIT -N STATUS	23	VAV-N-STS										●	●					
VAV TERMINAL UNIT -N FLOW	24	VAV-N-FT										●						
VAV TERMINAL UNIT -N SA TEMP	25	VAV-N-TE											●					
RE-HEAT VALVE	26	CV-1								●								
SUPPLEMENTAL RADIANT VALVE	27	CV-2								●								
HF-23 FILTER PRESSURE DIFFERENTIA	28	(HEPA)AI-4																
TSI PRESSURE CONTROLLER ALARM	29	PIC1-ALA											●					
TSI PRESSURE CONTROLLER STATUS	30	PIC1-STS										●						
TSI PRESSURE CONTROLLER ALARM	31	PIC2-ALA											●					
TSI PRESSURE CONTROLLER STATUS	32	PIC2-STS										●						
HOT WATER RETURN TEMP	33	TT-4											●					
HOT WATER SUPPLY TEMP	34	TT-3											●					
HOT WATER SUPPLY PRESSURE	35	PT-1											●					
HOT WATER PUMP 3 AND 4 VFD	36	P3-SPD							●				●					
STEAM PRESSURE TO HX	37	PT-2																
HX-1 STEAM HEATING VH-1	38	VH-1								●								
HX-1 STEAM HEATING VH-2	39	VH-2								●								
HX-2 STEAM HEATING VH-3	40	VH-3								●								
HX-2 STEAM HEATING VH-4	41	VH-4								●								
MAKE UP FILL LOW WATER LEVEL	42	LWL-1											●					
HUMIDITY HIGH LIMIT	43	HHL													●			
STEAM HUMIDIFIER VALVE FCV-3	44	FCV3								●								
STEAM ISOLATION VALVE	45	V6					●											
Return Air Humidity	46	RAH											●					
EF-203,204,205 EXHAUST PRESSURE	47	AI-5												●				
GENERAL EXHAUST AIR DAMPER	48	D-4									●							
HOT WATER RETURN PRESSURE	49	PT-3											●					
MAKE UP FILL TANK STATUS/ALARM	50	T-1-STS										●	●					

System inputs (analog) and system software/control (alarm processing)

POINT ID	INPUTS ANALOG: TEMPERATURE (TI)	INPUTS ANALOG: PRESSURE	INPUTS ANALOG: POSITION	INPUTS ANALOG: FLOW	INPUTS ANALOG: PERCENT	INPUTS ANALOG: STATIC PRESSURE	INPUTS ANALOG: CARBON MONOXIDE	INPUTS ANALOG: HUMIDITY	INPUTS ANALOG: VACUUM	ALARM PROCESSING: Local Control Panel	ALARM PROCESSING: Area Alarm Panel	ALARM PROCESSING: SYSTEM CONTROL PANEL	ALARM PROCESSING: HIGH LIMIT	ALARM PROCESSING: LOW LIMIT	ALARM PROCESSING: --	ALARM PROCESSING: --
1	●											●	●	●		
2				●								●	●	●		
3	●											●	●	●		
4	●			●								●	●	●		
5				●								●	●	●		
6												●	●	●		
7												●				
8												●				
9												●				
10												●				
11												●				
12												●				
13		●										●	●	●		
14												●				
15	●											●	●			
16						●						●	●	●		
17						●						●	●	●		
18												●		●		
19						●						●	●	●		
20												●				
21												●				
22												●				
23												●				
24			●	●								●	●			
25	●											●	●	●		
26												●				
27												●				
28		●										●	●	●		
29		●										●				
30		●										●				
31		●										●				
32		●										●				
33	●											●	●	●		
34	●											●	●	●		
35		●										●	●	●		
36										●		●				
37		●										●	●	●		
38												●				
39												●				
40												●				
41												●				
42				●								●				
43												●	●			
44												●				
45												●				
46								●								
47						●						●				
48												●				
49		●				●						●	●	●		
50												●				

System software/control (application/function) and remarks

POINT ID	SCHEDULE START/STOP	FUNCTION	DUTY CYCLE	TEMPERATURE ECONOMIZER	ENTHALPY ECONOMIZER	TEMPERATURE RESET	DEMAND LIMITING	TEMPERATURE OVERRIDE	STATIC PRESSURE RESET	FAN SHUT-OFF	--	PRESSURE/VOLUME CONTROL	FAILURE MODE	SPACE TEMP. CONTROL	FULL COMMUNICATION	TRENDING	REMARKS/ALARMS
1																	>100 °F, < 50°F
2																●	>11,000, < 2000 CFM
3						●										●	>100 °F, < 50°F
4																●	>3,000, <1,300 CFM
5																●	>13,000, <3,000 CFM
6																●	>3,000, <200 CFM
7																●	
8															●	●	FULL COMMUNICATION
9	●															●	
10				●												●	
11				●												●	
12				●												●	
13																●	
14								●								●	
15																●	>65 °F, < 40°F
16																●	
17																●	<(-)7">0",<(-)8" W.C.
18																●	
19																●	<1" ,>7" W.C.
20																●	
21															●	●	FULL COMMUNICATION
22	●															●	
23	●														●	●	FULL COMMUNICATION
24																●	
25																●	
26																●	
27																●	
28																●	
29																●	(-) PRESSURE<.01 PSI
30																●	(-) PRESSURE=.01 PSI
31																●	(-) PRESSURE<.01 PSI
32																●	(-) PRESSURE=.01 PSI
33																●	> 195 °F, < 90°F
34																●	> 195 °F, < 90°F
35																●	> 100 PSIG,< 5 PSIG
36															●	●	FULL COMMUNICATION
37																●	> 18 PSIG,< 5 PSIG
38																●	
39																●	
40																●	
41																●	
42																	
43																●	
44																●	
45																●	
46																●	
47								●								●	<5% >80%
48				●												●	<(-)7", >1" W.C.
49																●	
50																●	

CONTROL DIAGRAM LEGEND

- (circle) LOCAL CONTROL PANEL FACILITY EXPLORER FX-16 INCLUDES THE FOLLOWING: (CP-N): (REFER TO ASSOCIATED ELECTRICAL PLANS) CP-3 HOT WATER HEATING PUMPS (P-3), (P-4) CP-58 AHU-58
- (S) SUPERVISORY CONTROL PANEL (SCP-1) (REFER TO MI-601 AND 602) FACILITY EXPLORER FX-60
- (STS) SYSTEM CONTROL COMPONENT
- (N) SYSTEM COMPONENT POINT ID NUMBER (FOR MORE ID'S NOT SHOWN, REFER TO MI-601 AND MI-602)
- ---- SIGNAL CABLE BACNET CABLE ETHERNET CABLE TO BE CAT 6

NOTES:
1) CONTROL SCHEMATICS INDICATES SAMPLE / GENERAL PARAMETERS TO BE DISPLAYED, MAINTAINED AND CONTROLLED. ADDITIONAL POINTS MAY BE ADDED PER VA.
2) FOR A COMPLETE LIST OF ITEMS TO BE CONTROLLED FOLLOW DRAWINGS AND SPECIFICATIONS 23 09 23 DIRECT DIGITAL CONTROL SYSTEM FOR HVAC.
3) I/O RACKS AT SUPERVISORY CONTROL PANEL (SCP-1) SHALL HAVE FUTURE ADD CAPACITY OF 100% AND CARDS TO IMPLEMENT INTO A BACnet NETWORK SYSTEM.
4) ALL CONTROLS FROM EMERGENCY 120V/208 PANELS LOCATED IN 3RD AND 4TH FLOOR ELECTRICAL CLOSETS SHALL BE INSTALLED AND COMMISSIONED BY INSTALLATION/COMMISSIONING CONTRACTOR. SEE EP-100, EP-101, EP-600, EP-601, EP-602 FOR MORE DETAILS

BID DOCUMENTS

Revisions	Date
65% SUBMITTAL SET	01.07.2012
95% SUBMITTAL SET	03.07.2012
BID DOCUMENTS SUBMITTAL SET	05.14.2012
REVISION - ADDED MAKE UP FILL STATUS CONTROL POINT	8-28-2012

Dept. of Veterans Affairs
Richard L. Roudebush
VA Medical Center
1481 W. 10th Street
Indianapolis, In 46202

CONSULTANTS:
BAYSINGER DESIGN GROUP
401 North Market Street, Marion, Illinois 62959
Telephone 618.998.8015 Fax 618.998.8032

CERTIFIED BY:
STATE OF MICHIGAN ASLAM MUKHTAR HUSAIN ENGINEER No. 6201035544 LICENSED PROFESSIONAL ENGINEER

ARCHITECT/ENGINEERS:
AMERICAN STRUCTUREPOINT INC.
7260 Shadeland Station | Indianapolis, Indiana 46256
TEL 317.547.5580 | FAX 317.543.0270
www.structurepoint.com

EnerTronics ENERGY TO EXCEL
Engineering Corporation
The Fairmont Building
9245 Calumet Ave. Suite 205,
Munster, IN 46321
(219) 836-2120 Fax (219) 836-1129

Drawing Title: SYSTEM DIRECT DIGITAL CONTROL DIAGRAMS AND 3rd and 10th Floor SAMPLE POINTS LIST TABLE

Project Title: RENOVATE FOR CLINICAL IMPROVEMENTS

Project Number: 583C16254
Building Number: 1
Drawing Number: MI-600
3FY12

PROJECT ENGINEER: Mary Piwowarski
Approved: Engineering Chief
Approved: Service Chief
Location: 3 WEST - C WING & 4 EAST - C WING
SCALE: 1/8"=1'-0"
Date: MAY 14, 2012
Checked: AMH
Drawn: DAS

Engineering and Facilities Management Services
Department of Veterans Affairs

RLR VAMC FORM 09-JD0227

PLOT DATE: 8/27/2012 3:10 PM
CAD DRAWING FILE LOCATION: Z:\ PROJECTS\1051 CLINICAL IMPROVEMENTS INDIANAPOLIS VA\BID DOCUMENTS REVISIONS\MI-600.DWG

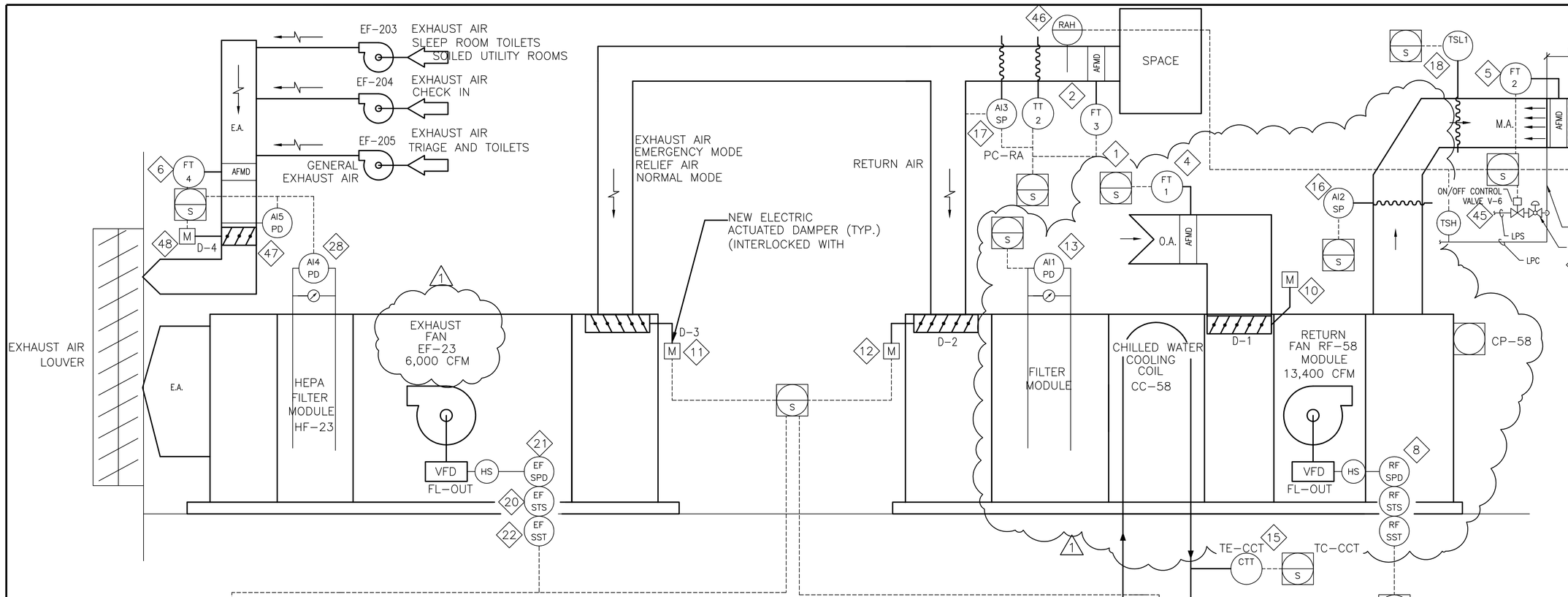

1 MI601 AIR HANDLING UNIT AHU-58 AND EXHAUST FAN EF-23
NTS CONTROL DIAGRAM

SEQUENCE OF OPERATION:

1. STEAM CONTROL VALVE SHALL MODULATE TO MAINTAIN THE LEAVING HOT WATER TEMPERATURE AT SET POINT.
2. THE LEAVING HOT WATER TEMPERATURE SHALL BE RESET INVERSELY WITH THE OUTDOOR TEMPERATURE AS SCHEDULED.
3. THE LEAD AND LAG PUMPS AND HEAT EXCHANGERS SHALL BE SEQUENTIAL BY THE OPERATOR CONTROLS AT THE PRE-DETERMINED INTERVAL (USUALLY 7 DAYS). IN THE EVENT THE PUMP FAILS TO START WITHIN 30 SECONDS, AN ALARM SHALL BE INITIATED AND THE SECOND PUMP SHALL START AUTOMATICALLY.

VALVE SEQUENCE:

1. V1 (⅓ CAPACITY) MODULATING FULLY OPEN TO MAINTAIN SET POINT
2. V2 (⅓ CAPACITY) MODULATE FULLY OPEN TO MAINTAIN SET POINT.
3. BOTH V1 & V2 MODULATE TOGETHER TO MAINTAIN SET POINT.

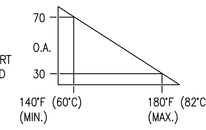

TYP OSA RESET SCHEDULE

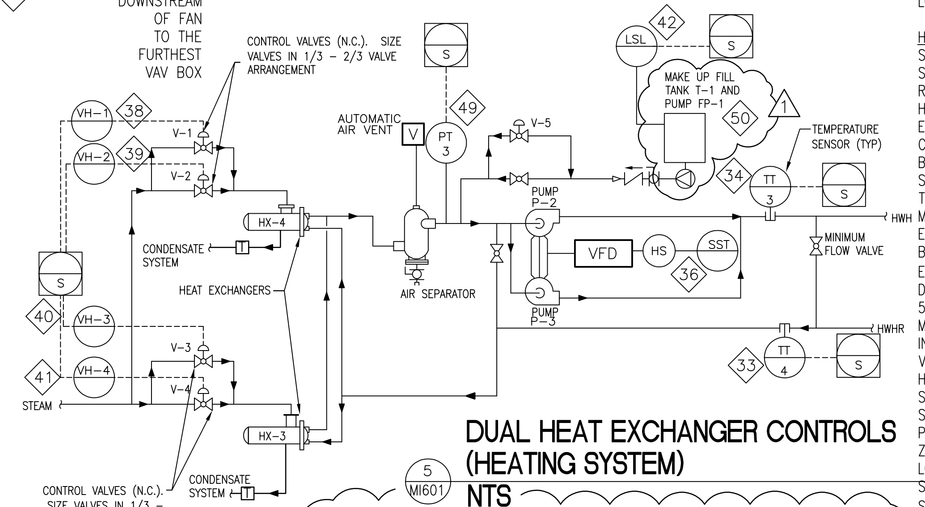

5 MI601 DUAL HEAT EXCHANGER CONTROLS (HEATING SYSTEM)
NTS

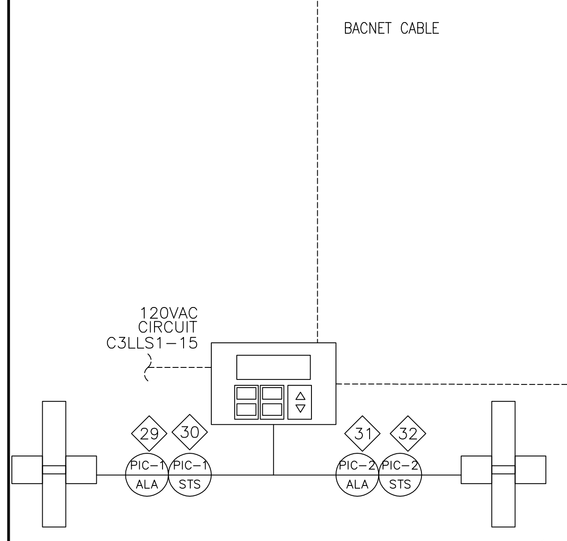

4 MI601 PRESSURE INDICATING MONITORS (PIT-N)
NTS 2 PLS. NEGATIVE EMERGENCY

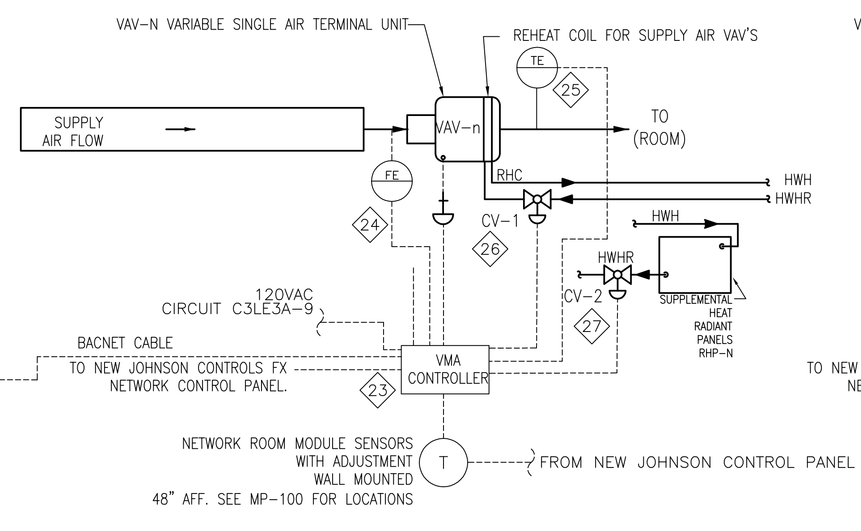

2 MI601 TYPICAL VAV TERMINAL UNIT (VAV-N) DIAGRAM
NTS 27 PLS. SUPPLY AIR

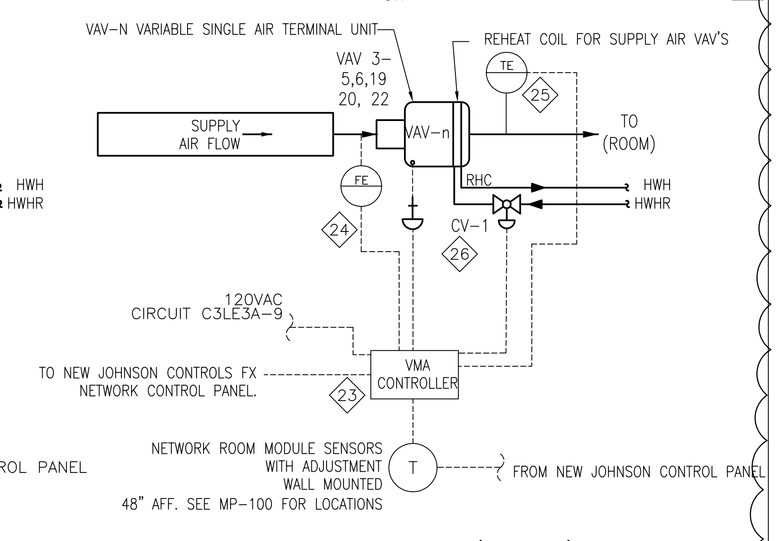

3 MI601 TYPICAL VAV TERMINAL UNIT (VAV-N) DIAGRAM
NTS 5 PLS. SUPPLY AIR

CONTROL DIAGRAM LEGEND

- LOCAL CONTROL PANEL (REFER TO THIS DWG AND MI600) FACILITY EXPLORER FX-16
- S — SUPERVISORY CONTROL PANEL (SCP-1) (REFER TO MI600) FACILITY EXPLORER FX-60
- SPD — LOCAL SYSTEM CONTROL COMPONENT (REFER TO THIS DWG AND MI600)
- N — SYSTEM COMPONENT POINT ID NUMBER (FOR MORE SAMPLE POINTS LIST TABLE REFER TO MI600)
- ---- SIGNAL CABLE
  BACNET CABLE
  ETHERNET CABLE

NOTES:

1. INSTALLATION/COMMISSIONING CONTRACTOR TO INSTALL, TEST AND COMMISSION A FUNCTIONALLY OPERATIVE AND INTEGRATED SYSTEM. ENSURE A WELL FUNCTIONING SYSTEM THAT WOULD PROVIDE ADEQUATE CONTROL OF TEMPERATURE, PRESSURE, HUMIDITY FOR THE RESPECTIVE PLACES.

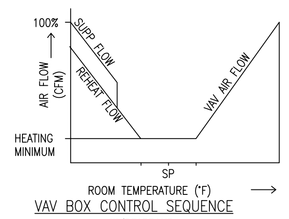

VAV BOX CONTROL SEQUENCE W/DEADBAND

A. SET POINTS SHALL BE SET AS FOLLOWS:
   COOLING 75°F (ADJ)
   HEATING 70°F(ADJ)
   DEADBAND OF 5° F BETWEEN HEATING AND COOLING SET POINTS WILL BE MAINTAINED.
B. UPON FALL IN SPACE TEMPERATURE THE VAV DAMPER WILL MODULATE TO MINIMUM POSITION.
C. UPON FURTHER DROP IN SPACE TEMPERATURE VALVE CV–1 WILL MODULATE TO MAINTAIN SET POINT ± .5° F. THE ADJUSTABLE TOLERANCE OF ± .5° F HAS BEEN SELECTED TO PREVENT VALVE HUNTING
D. VALVE CV–2 SHALL BE ENABLED WHEN OUTSIDE AIR FALLS BELOW 40° F (ADJ) AND VALVE CV–1 HAS BEEN MODULATED OPEN ABOVE 30% (ADJ). VALVE CV–2 SHALL MAINTAIN SET POINT ± .5° F. THE ADJUSTABLE TOLERANCE OF ± .5°F HAS BEEN SELECTED TO PREVENT VALVE HUNTING.
E. THE REVERSE SHALL OCCUR ON THE RISE IN SPACE TEMPERATURE.

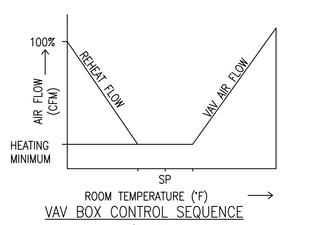

VAV BOX CONTROL SEQUENCE W/DEADBAND

A. SET POINTS SHALL BE SET AS FOLLOWS:
   COOLING 75°F (ADJ)
   HEATING 70°F(ADJ)
   DEADBAND OF 5° F BETWEEN HEATING AND COOLING SET POINTS WILL BE MAINTAINED.
B. UPON FALL IN SPACE TEMPERATURE THE VAV DAMPER WILL MODULATE TO MINIMUM POSITION.
C. UPON FURTHER DROP IN SPACE TEMPERATURE VALVE CV–1 WILL MODULATE TO MAINTAIN SET POINT ± .5° F. THE ADJUSTABLE TOLERANCE OF ± .5° F HAS BEEN SELECTED TO PREVENT VALVE HUNTING
D. THE REVERSE SHALL OCCUR ON THE RISE IN SPACE TEMPERATURE.

SEQUENCE OF OPERATION FOR VARIABLE AIR VOLUME AIR HANDLING UNIT WITH MINIMUM OUTSIDE AIR

1. General

UNIT IS NORMALLY STARTED AND STOPPED REMOTELY AT THE ECC. H-O-A SWITCH SHALL BE KEPT IN THE 'AUTO' POSITION. 'HAND' AND 'OFF' POSITIONS SHALL BE USED ONLY FOR MAINTENANCE. WHEN THE UNIT IS 'OFF' D-1, D-2, D-3, SHALL BE FULLY CLOSED. WHEN THE UNIT IS 'ON' SD-1 AND SD-2 SHALL BE FULLY OPEN AND OTHER DAMPERS SHALL OPEN AND MODULATE INACCORDANCE WITH THE FOLLOWING

2. Temperature Control

SUPPLY AIR (SA) TEMPERATURE. SENSED BY TT-1, SHALL BE MAINTAINED AT SETPOINT VIA DIGITAL CONTROL PANEL BY MODULATING CHILLED WATER CONTROL VALVE FCV-1 IN SUMMER. IN WINTER THE CHILLED WATER VALVE SHALL BE CLOSED AND THE TEMPERATURE CONTROL SHALL BE PERFORMED AT THE VAV BOXES AND AT THE RADIANT PANELS.

1. Air Flow Control

MODE A1 - NORMAL MODE BASED ON OUTSIDE AIR MODULATION (PREFERRED)

THE RETURN AIR FLOW (RA) FAN SHALL BE CONTROLLED BY THE DIGITAL CONTROL PANEL MODULATING THE RETURN FAN RF 58 VARIABLE SPEED MOTOR CONTROLLER TO MAINTAIN SPECIFIED SUPPLY AIR FLOW LEAVING THE AHU (FT2) PER THE BALANCING TABLE DRAWINGS MH-600 AT THE INITIAL SETPOINT TOTALS.

MINIMUM OUTSIDE AIR FLOW IS CALCULATED AT 1750 CFM. THE OUTSIDE AIR NEEDS TO BE ABOVE THE MINIMUM AIR FLOW OF 1750 OR EQUAL TO THE MEASURED EXHAUST FLOW FOR A NEUTRAL SUITE PRESSURIZATION. (FOR A POSITIVE SUITE PRESSURIZATION THE OFFSET FLOW SHOULD BE INCREASED BY 200 CFM AND FOR NEGATIVE SUITE PRESSURIZATION THE OFFSET FLOW SHOULD BE DECREASED BY 200 CFM).

OUTSIDE MAKEUP AIR (OA) DAMPER D1 SHALL BE MODULATED TO MAINTAIN AN OUTSIDE AIRFLOW FT1 ABOVE THE EXHAUST AIR FLOW FT 4 BY AN OFFSET VALUE. THE OFFSET VALUE SHALL BE CALCULATED BY THE FOLLOWING:
FOR EXHAUST FLOWS LESS THAN 1750 CFM: OFFSET FLOW=1750-EXHAUST FLOW. FOR EXHAUST FLOW ABOVE 1750 OFFSET VALUE SHALL BE 0. THE OFFSET VALUE SHALL RANGE FROM 500 CFM (1750- MINIMUM EXHAUST 1250) TO 0 CFM FOR EXHAUST FLOW ABOVE 1750 CFM.
OUTSIDE AIR DAMPER D1 SHALL MODULATE PER THE FOLLOWING: OUTSIDE AIR FT1=OFFSET CFM + EXHAUST AIR FT4 CFM

NOTE: TOTAL SUPPLY AIR FLOW SHALL BE THE SUMMATION OF INDIVIDUAL FLOW AT VAV BOXES PER THE TABLE. SUMMER CONDITIONS AT THE VAV BOX SHALL REQUIRE HIGHER SUPPLY AIR AND CORRESPONDING EXHAUST AIR TO MAINTAIN SPECIFIED ROOM PRESSURIZATION AND COMFORT CONDITIONS.

MODE A2 - NORMAL MODE BASED ON RELIEF AIR FAN VFD AND DAMPER D-3 MODULATION

AS IN MODE A1, THE RETURN AIR FLOW (RA) FAN SHALL BE CONTROLLED BY THE DIGITAL CONTROL PANEL MODULATING THE RETURN FAN RF 58 VARIABLE SPEED MOTOR CONTROLLER TO MAINTAIN SPECIFIED SUPPLY AIR FLOW LEAVING THE AHU (FT2) PER THE BALANCING TABLE DRAWINGS MH-600 AT THE INITIAL SETPOINT TOTALS.

MINIMUM OUTSIDE AIR FLOW IS SET AT 1750 CFM. THE OUTSIDE AIR NEEDS TO BE ABOVE THE MINIMUM AIR FLOW OF 1750 OR EQUAL TO THE MEASURED EXHAUST FLOW FOR A NEUTRAL SUITE PRESSURIZATION. (FOR OTHER THAN NEUTRAL CONDITIONS: A POSITIVE SUITE PRESSURIZATION SHALL REQUIRE TO INCREASE BY OUTSIDE AIR FLOW BY 200 CFM AND FOR NEGATIVE SUITE PRESSURIZATION THE FLOW TO DECREASE BY 200 CFM).

IN MODE A2, FOR EXHAUST AIR FLOWS LESS THAN 1750 CFM, EXHAUST AIR / RELIEF AIR FAN EF-23 SHALL BE MODULATED TO MAINTAIN OVERALL SUITE PRESSURIZATION. OUTSIDE AIR FLOW DAMPER SHALL BE SET AT MINIMUM AIR FLOW OF 1750 (FT1) BY MODULATING DAMPER AT D1. IN THIS MODE RELIEF AIR FAN AND DAMPER SHALL BE USED TO RELIEF EXCESS AIR ABOVE EXHAUST AIR. THE FOLLOWING EQUATION SHALL HOLD: FOR EXHAUST AIR FLOW LESS THAN 1750 CFM: RELIEF AIR FLOW = FT1 (1750 CFM CONSTANT) OUTSIDE AIR) - FT 4 (EXHAUST AIR).

NOTE MODE A2 SHALL REQUIRE SETTING OF RELIEF AIR DAMPER D-3 SEMI-CLOSED TO ALLOW ADEQUATE PRESSURE DROP AND MINIMUM AMPERAGE DRAW FOR THE MOTOR AT MINIMUM FAN FLOW CONDITIONS TO EF-23

FOR EXHAUST AIR FLOW ABOVE 1750 CFM, OUTSIDE AIR DAMPER D-3 SHALL ADJUST THE OUTSIDE AIR FLOW F1 TO MATCH THE EXHAUST AIR FLOW TO MAINTAIN NEUTRAL PRESSURIZATION. FAN EF-23 SHALL REMAIN OFF AND DAMPER D-3 SHALL BE CLOSED DURING THIS CONDITION.

NOTE: TOTAL SUPPLY AIR FLOW SHALL BE THE SUMMATION OF INDIVIDUAL FLOW AT VAV BOXES PER THE TABLE. SUMMER CONDITIONS AT THE VAV BOX SHALL REQUIRE HIGHER SUPPLY AIR AND CORRSPONDING EXHAUST AIR TO MAINTAIN SPECIFIED ROOM PRESSURIZATION AND COMFORT CONDITIONS.

MODE A3 - EMERGENCY MODE
FOR 3RD FLOOR AN ADDITIONAL MODE C SHALL BE INDICATED TO THE OPERATOR CONSOLE AS EMERGENCY/BREAKOUT MODE. DURING MODE A3, THE OUTSIDE MAKE UP AIR (OA) SHALL BE MAXIMIZED AT A VALUE - (SET AT 2500 CFM INITIALLY AND ADJUSTABLE AS REQUIRED) AND RETURN AIR SHALL BE EXHAUSTED OUTSIDE.

THE FOLLOWING SEQUENCE IS ENVISAGED:

- MODE A3 SHALL BE TRIGGERED AT THE 3RD FLOOR BY AN ADMINISTRATIVE STAFF OR AT THE OPERATOR CONSOLE
- OUTSIDE AIR FLOW DAMPER D-1 SHALL BE SET TO MAINTAIN A FLOW OF 2500 CFM INITIALLY.
- RETURN AIR DAMPER D-2 SHALL BE CLOSED
- EXHAUST AIR/RELIEF AIR DAMPER D-3 SHALL BE FULLY OPEN.
- EXHAUST FAN EF-23 SHALL MODULATE THE EXHAUST FLOW TO MAINTAIN A NEGATIVE PRESSURE DIFFERENTIAL WITH RESPECT TO ADJOINING SPACES AT PIC 1 AND PIC 2 OF 0.1 INCH WC (ADJUSTABLE).
- VAV BOX SUPPLY AIR CONTROLS SHALL MAINTAIN MINIMUM ALLOWED FOR INFECTION CONTROL OR WHICH IS NECESSARY FOR THOSE ROOMS THAT REMAIN OCCUPIED DURING THE EMERGENCY MODE SEQUENCE.
- GENERAL EXHAUST SHALL BE REDUCED 50% OR THAT WHICH IS REQUIRED FOR OCCUPIED ROOMS TO ACCOMODATE HIGHER SUCTION THROUGH EMERGENCY EXHAUST FAN EF-23.
- THE FOLLOWING SCHEDULE OF ROOMS THAT ARE LIKELY TO REMAIN OCCUPIED FULLY SHALL BE USED FOR EMERGENCY MODE:

(EXAM ROOMS AS REQUIRED, SLEEP STUDY BED ROOMS. SUPPORTING STAFF ROOMS) CONTRACTOR SHALL OBTAIN A FINAL LIST FROM THE COR FOR LISTED ROOMS WITH CRITICAL CONDITIONS.

SAFETY INTERLOCK
USING HIGH PRESSURE SENSOR AI-2 LOCATED AT THE FAN DISCHARGE, SHALL PREVENT THE RETURN FAN FROM DEVELOPING OVER 7" OF STATIC PRESSURE (FIELD ADJUSTABLE). IF STATIC PRESSURE AT SPS-2 DOES EXCEED 7" THE SUPPLY AIR FAN SHALL STOP. SPS-2 SHALL BE HARDWIRED TO THE SUPPLY FAN VSMC AND UNIT SHALL BE SHUTDOWN IN HAND,AUTO OR BYPASS MODE. SPS-2 WILL REQUIRE MANUAL RESET AT THE DEVICE.

4. Static Pressure Control Alternative

THE PRIMARY MODE OF CONTROL SHALL BE BY DIRECTLY CONTROLLING THE REQUIRED AIR FLOW RATES BY VFDS AND DAMPER. FOR ADDITIONAL FLEXIBILITY A STATIC PRESSURE CONTROL MODE SHALL ALSO BE INCLUDED TO PROVIDE ALTERNATE MODE
4.1. SUPPLY AIR DUCT STATIC PRESSURE WILL BE MAINTAINED AT SETPOINT PC*SA BY MODULATING THE RETURN FAN SPEED.

EXHAUST FAN SHALL MAINTAIN REQUIRED FLOW FT-4 BY MODULATING D-4

RETURN TO SUPPLY VOLUME DIFFERENTIAL FC*REF WILL BE MAINTAINED BY MODULATING OUTSIDE AIR DAMPER AND ACCOUNT FOR THE FLOWS AT EXHAUST FANs EF-203,204 and 205 MEASURED BY FT-4.

4.2. NEW EXHAUST FANS EF-203, 204, 205 SHALL BE MODULATED BY FAN CONTROLLER TO MAINTAIN PRESSURE AT AI-5.

5. Automatic Shutdown/restart
5.1. WHEN SMOKE IS DETECTED BY SUPPLY SMOKE DETECTOR SD*SA (existing fire dampers) THE UNIT WILL SHUT 'OFF' THROUGH HARD WIRING AND SOFTWARE, AN ALARM SENT TO THE ECC, AND THE OUTDOOR AIR AND SMOKE DAMPERS WILL CLOSE. WHEN THE FIRE ALARM SYSTEM IS RESET, THE DAMPERS WILL OPEN AND THE END SWITCHES WILL ALLOW THE SUPPLY FAN TO START.

5.2. EXHAUST FANS SERVING AREA OF THE SUPPLY FAN SHALL CONTINUE TO RUN. SUPPLY FAN SHALL RESTART AND FIRE DAMPERS SHALL OPEN WHEN FIRE ALARM CIRCUIT IS RESET.

6. Emergency Constant Speed Operation
6.1. UPON FAILURE OF THE VFD, THE RETURN FANS SHALL BE STARTED/STOPPED MANUALLY AT THE DIGITAL CONTROL PANEL OR THE ECC THROUGH THE BY-PASS STARTER. FANS SHALL THEN BE OPERATED AT CONSTANT SPEED.

7. Alarms
7.1. DURING THE OCC MODE, ALARM VALUES AND CRITICAL LEVELS WILL BE WRITTEN TO ANALOG AND BINARY OBJECTS. CONTROLLED VARIABLES ALARMS WILL TRACK SETPOINT ADJUSTMENTS. TIME DELAYS WILL ALLOW UNIT TO STABILIZE BEFORE ALARMS ARE ACTIVATED AFTER STARTUP. SEASONAL CONTROL LOOP ALARM VALUES WILL BE DELETED DURING DISABLED CONDITIONS. THESE ALARMS WILL BE REWRITTEN TO THE OBJECT DURING THE OCCUPIED CONDITIONS. I.E. HUMIDITY CONTROL LOOP, ETC.

7.2. FREEZE PROTECTION AND SMOKE DETECTOR ALARMS ARE ALWAYS ACTIVE.

7.3. DURING THE UNOCC MODE, ALARM VALUES AND CRITICAL LEVELS WILL BE DELETED TO ANALOG AND BINARY OBJECTS. THIS PREVENTS NUISANCE ALARMS WHEN THE UNIT HAS BEEN COMMANDED OFF. THERE ARE SEPARATE CONTROL SYSTEMS TO INDICATE THAT AN AHU IS ACTUALLY NOT OPERATING, WITHOUT THE USE OF ALARM NOTIFICATION BOXES.

LE). THE AIRFLOW SWITCH SHALL PROVE AIRFLOW BEFORE HUMIDITY CONTROLS ARE ACTIVATED.ALL CRITICAL 1 ALARMS WILL ALSO NOTIFY THE CHILLER PLANT OPERATOR, AND CONTROL TECHNICIAN, VIA A PAGER.

8. HUMIDITY CONTROL
RETURN (OR EXHAUST) AIR HUMIDITY SHALL BE MONITORED, ON A CALL FOR HUMIDIFICATION, HUMIDIFIER VALVE FCV-3 SHALL MODULATE TO MAINTAIN THE RETURN (OR EXHAUST) AIR HUMIDITY SET POINT TO 30% (ADJUSTABLE). PRIOR TO ACTIVATION OF FCV-3, THE ON/OFF CONTROL VALVE V-6 SHALL BE ENABLED THROUGH ECC AND JACKET TEMPERATURE SENSED BY TSH SHALL BE WARM ENOUGH TO PREVENT CONDENSATION. THE HIGH LIMIT HUMIDITY SENSOR, LOCATED IN THE SUPPLY AIR DUCT AFTER THE HUMIDIFIER SHALL DISABLE THE HUMIDIFIER AND GIVE AN ALARM SIGNAL TO THE ECC. IF THE SUPPLY AIR HUMIDITY EXCEEDS 90% RH (ADJUSTABLE), THE AIRFLOW SWITCH SHALL PROVE AIRFLOW BEFORE HUMIDITY CONTROLS ARE ACTIVATED.

SEQUENCE OF OPERATIONS AND CONTROLS

STEAM PRV STATION, TRAPS AND CONDENSATE RETURN PUMPS
INSTALLATION/COMMISSIONING CONTRACTOR SHALL INSTALL, TEST AND COMMISSION A FUNCTIONALLY OPERATIVE AND INTEGRATED STEAM AND CONDENSATE RETURN SYSTEM
STEAM PRV STATION INCLUDING 100% BYPASS LINE WITH A GLOBE VALVE TO REDUCE STEAM FROM APPROXIMATELY 80 PSIG TO 15 PSIG, INCLUDE RELIEF VALVES, ISOLATION VALVES, SENSING LINES, TRAPS, THERMOSTATIC VENTS, AS REQUIRED FOR A 2-LINE + BYPASS REGULATING STATION WITH 1/3 AND 2/3 CAPABILITY.
INSTALL, TEST AND COMMISSION CONDENSATE COLLECTION SYSTEM
CONTROLLER WITH STANDBY AND AUTOMATIC START UP OF SPARE PUMP
LOW-LEVEL AT THE TANK TO SHUTOFF THE PUMP

HOT WATER SYSTEM
STEAM TO HOT WATER HEAT EXCHANGERS TO SUPPLY HOT WATER AT AROUND 175 F. FOR VAV REHEAT BOXES COILS ON 3RD AND 4TH FLOOR.
HOT WATER DISCHARGE TEMPERATURE AT THE HEAT EXCHANGERS TO BE MAINTAINED BY TEMPERATURE CONTROL VALVES LOCATED IN THE STEAM LINES TO BE SET BETWEEN 180°F TO 140°F PER OSA RESET SCHEDULE.
TEMPERATURE SENSING PROBE AND FULL MODULATING VALVES FOR EACH OF THE HEAT EXCHANGERS. 100% MODULATING VALVES TO ALLOW BACK-UP OPERATION IN CASE THE FIRST HEAT EXCHANGER DOESN'T KEEP UP THE WITH THE DEMAND AND TEMPERATURE FALLS BY MORE THAN 5°F FROM THE SETPOINT FOR MORE THAN A MINUTE.
INCLUDE ISOLATION VALVES, SENSING LINES, TRAPS, VENTS, AS REQUIRED.
HOT WATER TO INDIVIDUAL REHEAT BOXES TO BE SUPPLIED BY A DUAL PUMP SYSTEM WITH VARIABLE SPEED DRIVE TO ADJUST FLOW BASED ON PRESSURE. REHEAT BOXES TO BE CONTROLLED BY ZONE ROOM SENSORS WITH ADJUSTABLE SETPOINTS LOCATED AT EACH ZONE. PERIMETER HEATING SYSTEM BY CEILING MOUNTED PANEL SHALL SUPPLEMENT THE REHEAT VAV (VAV-N) BOX.
HOT WATER RETURN FROM THE ZONES TO BE RE-CIRCULATED INTO THE HEAT EXCHANGER SYSTEM.
CONTROL SYSTEM SHALL HAVE A PROVISION TO SELECT THE PERIMETER HEATING AS LEAD OR LAG TO THE REHEAT VAV BOX HEATING VALVE.
PUMP CONTROLS AND INTERLOCKS
CONTROLLER WITH STANDBY AND AUTOMATIC START UP OF SPARE PUMP
MAKE UP FILL WATER LEVEL INDICATIONS
MAKE UP WATER UNIT SHALL HAVE LOW LEVEL INDICATOR FOR MAKE UP FILL TO HEATING SYSTEM SHALL BE INDICATED TO EEC.
UNIT SHALL MAINTAIN PRESSURE IN THE SYSTEM AND STATUS INDICATOR SHALL INDICATE STATUS AND ALARM TO EEC

65% SUBMITTAL SET	01.07.2012	
95% SUBMITTAL SET	03.07.2012	
BID DOCUMENTS SUBMITTAL SET	05.14.2012	
REVISION - CORRECTED AHU-58 ARRANGEMENT	8-28-2012	
REVISION - CORRECTED EF-23 PERFORMANCE	8-28-2012	
REVISION - ADDED CONTROL POINT FOR MAKEUP FILL TANK	8-28-2012	
Revisions:	Date	

Dept. of Veterans Affairs
Richard L. Roudebush
VA Medical Center
1481 W. 10th Street
Indianapolis, In 46202

CONSULTANTS:
BAYSINGER DESIGN GROUP
401 North Market Street
Marion, Illinois 62959
Telephone 618.998.8015
Fax 618.998.8032

CERTIFIED BY:
STATE OF MICHIGAN ASLAM MUKHTAR HUSAIN ENGINEER No. 6201035544 LICENSED PROFESSIONAL ENGINEER

ARCHITECT/ENGINEERS:
AMERICAN STRUCTUREPOINT INC.
7260 Shadeland Station | Indianapolis, Indiana 46256
TEL 317.547.5580 | FAX 317.543.0270
www.structurepoint.com

EnerTronics ENERGY TO EXCEL
Engineering Corporation
The Fairmont Building
9245 Calumet Ave. Suite 205,
Munster, IN 46321
(219) 836-2120 Fax (219) 836-1129

BID DOCUMENTS

Drawing Title: 3RD AND 10TH FLOOR HVAC CONTROL DIAGRAMS AND SEQUENCE OF OPERATIONS		Project Title: RENOVATE FOR CLINICAL IMPROVEMENTS		Project Number: 583C16254
				Building Number: 1
PROJECT ENGINEER: Mary Piwowarski	Approved: Engineering Chief	Location: 3 WEST - C WING & 4 EAST - C WING		Drawing Number: MI-601
SCALE: 1/8"=1'-0"	Approved: Service Chief	Date: MAY 14, 2012	Checked / Drawn	3FY12

Engineering and Facilities Management Services
Department of Veterans Affairs

RLR VAMC FORM 09-JD0227

PLOT DATE: 5/27/2012 3:02 PM
CAD DRAWING FILE LOCATION: Z:\1 PROJECTS\1051 CLINICAL IMPROVEMENTS INDIANAPOLIS VA\BID DOCUMENTS REVISION\MI-601.DWG

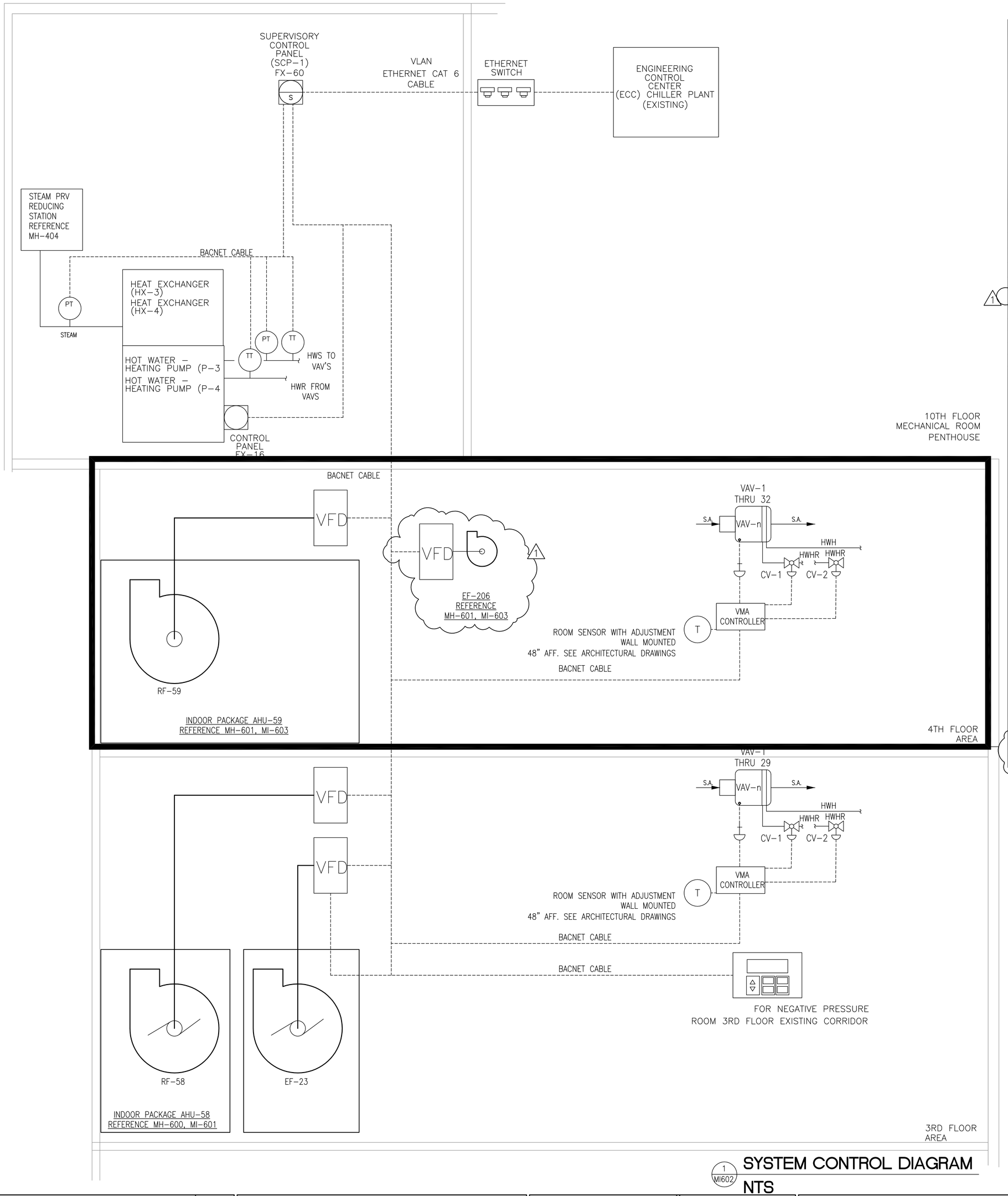

1 MI602 SYSTEM CONTROL DIAGRAM
NTS

VA RLR VAMC
BUILDING 1: 4TH FLOOR CLINICAL IMPROVEMENTS
SAMPLE POINTS LIST

SYSTEMS:
HVAC AIR HANDLER UNITS AHU-59 AND VFD
EXHAUST FAN EF-28 (VFD)
VAV RE-HEAT AND RADIANT HOT WATER HEATING
STEAM DISTRIBUTION, RELATIVE HUMIDITY

PAGE:

SYSTEM COMPONENT:	POINT ID (N)	ABBREVIATION	POINT LEGEND: PRIORITY ADD-ALTERNATE NO.	POINT LEGEND: ELECTRIC DEVICE START/STOP OPEN/CLOSE	SYSTEM OUTPUTS BINARY: SPEED COMMAND	SYSTEM OUTPUTS BINARY: VALVE/DAMPER POSITION	SYSTEM OUTPUTS BINARY: STATUS	SYSTEM OUTPUTS ANALOG: PRESSURE	SYSTEM INPUTS BINARY: HIGH HUMIDITY	SYSTEM INPUTS BINARY: HIGH STATIC PRESSURE	SYSTEM INPUTS BINARY: LOW TEMPERATURE	SYSTEM INPUTS ANALOG: TEMPERATURE (TT)	SYSTEM INPUTS ANALOG: PRESSURE	SYSTEM INPUTS ANALOG: POSITION	SYSTEM INPUTS ANALOG: FLOW	SYSTEM INPUTS ANALOG: PERCENT	SYSTEM INPUTS ANALOG: STATIC PRESSURE	SYSTEM INPUTS ANALOG: CARBON MONOXIDE	SYSTEM INPUTS ANALOG: HUMIDITY	SYSTEM SOFTWARE/CONTROL ALARM PROCESSING: Area Alarm Display	SYSTEM SOFTWARE/CONTROL ALARM PROCESSING: Local Control Panel	SYSTEM SOFTWARE/CONTROL ALARM PROCESSING: HIGH & LOW LIMIT	SYSTEM SOFTWARE/CONTROL ALARM PROCESSING: STATIC PRESSURE CONTROL PANEL	SYSTEM SOFTWARE/CONTROL APPLICATION/FUNCTION: SCHEDULE START/STOP	SYSTEM SOFTWARE/CONTROL APPLICATION/FUNCTION: FUNCTION	SYSTEM SOFTWARE/CONTROL APPLICATION/FUNCTION: DUTY CYCLE	SYSTEM SOFTWARE/CONTROL APPLICATION/FUNCTION: TEMPERATURE ECONOMIZER	SYSTEM SOFTWARE/CONTROL APPLICATION/FUNCTION: TEMPERATURE RESET	SYSTEM SOFTWARE/CONTROL APPLICATION/FUNCTION: DEMAND LIMITING	SYSTEM SOFTWARE/CONTROL APPLICATION/FUNCTION: STATIC PRESSURE RESET	SYSTEM SOFTWARE/CONTROL APPLICATION/FUNCTION: FAN SHUTDOWN OVERRIDE	SYSTEM SOFTWARE/CONTROL APPLICATION/FUNCTION: PRESSURE/VOLUME CONTROL	SYSTEM SOFTWARE/CONTROL APPLICATION/FUNCTION: FAILURE MODE CONTROL	SYSTEM SOFTWARE/CONTROL APPLICATION/FUNCTION: SPACE TEMP CONTROL	SYSTEM SOFTWARE/CONTROL APPLICATION/FUNCTION: FIXED COMMUNICATION	SYSTEM SOFTWARE/CONTROL APPLICATION/FUNCTION: TRENDING	REMARKS/ALARMS
Return air Temperature	1	TT-2						●				●									●	●	●																>100 °F, < 50°F
Return Air Flow RF-59 (cfm)	2	FT-3						●						●							●	●	●															●	>11,000, < 2000 CFM
Mixed air Temperature	3	TT-1						●				●									●	●	●						●									●	>100 °F, < 50°F
OUTSIDE AIR FLOW (cfm)	4	FT-1						●				●		●							●	●	●															●	>3,000, <1,300 CFM
MIXED AIR FLOW (cfm)	5	FT-2						●						●							●	●	●															●	>13,000, <10,000 CFM
EF-28 EXHAUST Air Flow (cfm)	6	FT-4					●	●													●	●	●															●	>3,000, <200 CFM
RF-59 FAN VFD STATUS/ALARM	7	RF-STS					●	●													●																	●	
RETURN FAN RF-59 VFD SPEED	8	RF-SPD				●	●	●													●																●	●	FULL COMMUNICATION
RETURN FAN RF-59 START/STOP	9	RF-SST		●																	●			●														●	
AHU-59 RETURN AIR DAMPER	10	D-2				●															●					●												●	
EF-206 RELIEF AIR DAMPER	11	D-3				●															●					●												●	
FILTER PF-59 PRESSURE DIFFERENTIAL	12	AI-1											●								●	●	●															●	
CC-59 COOLING VALVE FCV-2	13	FCV-2					●														●									●								●	
Cooling Coil Temperature	14	CCT						●				●									●	●																●	>65 °F, < 40°F
Discharge Static Pressure Limit	15	AI-2						●													●	●								●								●	
RETURN AIR PRESSURE	16	AI-3						●	●							●					●																	●	<(–)7">2"W.C. ALTERNATE
MIXED AIR LOW TEMPERATURE LIMIT	17	TSL-1								●											●		●															●	< 60°F
SUPPLY AIR STATIC PRESSURE	18	SPS-2						●		●						●					●	●																●	<1", >7"W.C ALTERNATE
FAN EF-28 VFD STATUS/ALARM	19	EF-STS					●	●													●																	●	
FAN EF-28 VFD SPEED	20	EF-SPD				●	●	●													●																●	●	FULL COMMUNICATION
FAN EF-28 START/STOP	21	EF-SST		●																	●			●														●	
(VAV TERMINAL UNIT TYPICAL FOR 33 UNITS)																																							
VAV TERMINAL UNIT –N STATUS	22	VAV-N-STS					●	●													●			●															
VAV TERMINAL UNIT –N FLOW	23	VAV-N-FT					●						●	●							●	●															●	●	
VAV TERMINAL UNIT –N SA TEMP	24	VAV-N-TE						●				●									●	●	●															●	
RE-HEAT VALVE	25	CV-1				●															●																	●	
SUPPLEMENTAL RADIANT VALVE	26	CV-2				●															●																	●	
OUTSIDE AIR DAMPER	27	D-1				●															●					●												●	
HUMIDITY HIGH LIMIT	28	HHL-1							●												●	●																●	
STEAM HUMIDIFIER VALVE FCV-4A	29	FCV4A				●															●																	●	
STEAM ISOLATION VALVE	30	V7			●																●																	●	
Return Air Humidity	31	RAH						●										●																				●	
EF-28 EXHAUST PRESSURE	32	AI-4							●							●					●									●								●	<(–)7", >1" W.C
HUMIDITY HIGH LIMIT	33	HHL-2								●											●	●																●	ALTERNATE CONTROL
STEAM HUMIDIFIER VALVE FCV-4B	34	FCV4B				●															●																	●	
STEAM ISOLATION VALVE	35	V8			●																●																	●	
Return Air Humidity	36	RAH-2						●										●																				●	
HUMIDITY HIGH LIMIT	37	HHL-3							●												●	●																●	
STEAM HUMIDIFIER VALVE FCV-4C	38	FCV4C				●															●																	●	
STEAM ISOLATION VALVE	39	V9			●																●																	●	
Return Air Humidity	40	RAH-3						●										●																				●	
FAN EF-206 VFD STATUS/ALARM	41	EF-STS					●	●													●																	●	
FAN EF-206 VFD SPEED	42	EF-SPD				●	●	●													●																●	●	FULL COMMUNICATION
FAN EF-206 START/STOP	43	EF-SST		●																	●				●													●	

1

CONTROL DIAGRAM LEGEND

LOCAL CONTROL PANEL FACILITY EXPLORER FX-16 INCLUDES THE FOLLOWING: (CP-N):

CP-58 AHU-59

S — SUPERVISORY CONTROL PANEL (SCP-1) (REFER TO MI-601 AND 602) FACILITY EXPLORER FX-60

STS — SYSTEM CONTROL COMPONENT

N — SYSTEM COMPONENT POINT ID NUMBER (FOR MORE ID'S NOT SHOWN, REFER TO MI-601 AND MI-602)

---- SIGNAL CABLE
BACNET CABLE
ETHERNET CABLE TO BE CAT 6

NOTES:
1) CONTROL SCHEMATICS INDICATES SAMPLE / GENERAL PARAMETERS TO BE DISPLAYED, MAINTAINED AND CONTROLLED. ADDITIONAL POINTS MAY BE ADDED PER VA.
2) FOR A COMPLETE LIST OF ITEMS TO BE CONTROLLED FOLLOW DRAWINGS AND SPECIFICATIONS 23 09 23 DIRECT DIGITAL CONTROL SYSTEM FOR HVAC.
3) I/O RACKS AT SUPERVISORY CONTROL PANEL (SCP-1) SHALL HAVE FUTURE ADD CAPACITY OF 100% AND CARDS TO IMPLEMENT INTO A BACnet NETWORK SYSTEM.
4) ALL CONTROLS FROM EMERGENCY 120V/208 PANELS LOCATED IN 3RD AND 4TH FLOOR ELECTRICAL CLOSETS SHALL BE INSTALLED AND COMMISSIONED BY INSTALLATION/COMMISSIONING CONTRACTOR. SEE EP-100, EP-101, EP-600, EP-601, EP-602 FOR MORE DETAILS

Revisions:	Date
65% SUBMITTAL SET	01.07.2012
95% SUBMITTAL SET	03.07.2012
BID DOCUMENTS SUBMITTAL SET	05.14.2012
REVISION - ADDED EF-206 AND VFD-6 CONTROL POINTS	8-28-2012
REVISION - MODIFIED RELIEF DAMPER DESCRIPTION	8-28-2012

Dept. of Veterans Affairs
Richard L. Roudebush
VA Medical Center
1481 W. 10th Street
Indianapolis, In 46202

CONSULTANTS:
BAYSINGER DESIGN GROUP
401 North Market Street
Marion, Illinois 62959
Telephone 618.998.8015
Fax 618.998.8032

CERTIFIED BY:
STATE OF MICHIGAN ASLAM MUKHTAR HUSAIN ENGINEER No. 6201035544 LICENSED PROFESSIONAL ENGINEER

ARCHITECT/ENGINEERS:
AMERICAN STRUCTUREPOINT INC.
7260 Shadeland Station | Indianapolis, Indiana 46256
TEL 317.547.5580 | FAX 317.543.0270
www.structurepoint.com

EnerTronics ENERGY TO EXCEL
Engineering Corporation
The Fairmont Building
9245 Calumet Ave. Suite 205,
Munster, IN 46321
(219) 836-2120 Fax (219) 836-1129

Drawing Title: SYSTEM DIRECT DIGITAL CONTROL DIAGRAMS AND 4th Floor SAMPLE POINTS LIST TABLE
Project Title: RENOVATE FOR CLINICAL IMPROVEMENTS
Project Number: 583C16254
Building Number: 1
PROJECT ENGINEER: Mary Piwowarski
Approved: Engineering Chief
Location: 3 WEST - C WING & 4 EAST - C WING
Drawing Number: MI-602
SCALE: 1/8"= 1'-0"
Approved: Service Chief
Date: MAY 14, 2012 (05.30.2012)
Checked: AMH
Drawn: DAS
3FY12

BID DOCUMENTS

Engineering and Facilities Management Services
Department of Veterans Affairs

RLR VAMC FORM 09-JD0227

PLOT DATE 6/27/2012 3:06 PM
CAD DRAWING FILE LOCATION Z:\1 PROJECTS\105 | CLINICAL IMPROVEMENTS INDIANAPOLIS VA\BID DOCUMENTS REVISION5\MI-602.DWG

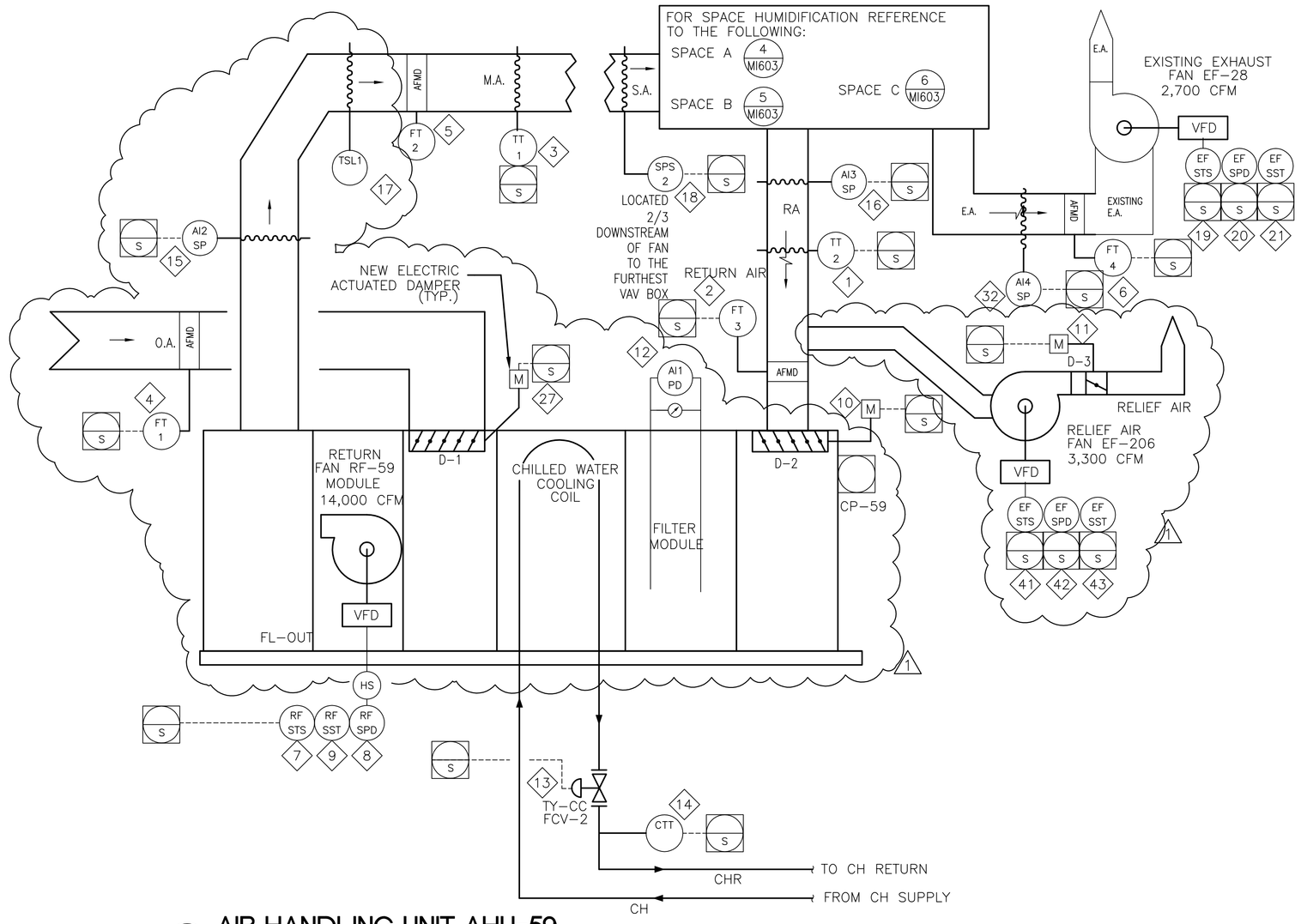

1 MI603 AIR HANDLING UNIT AHU-59
NTS CONTROL DIAGRAM

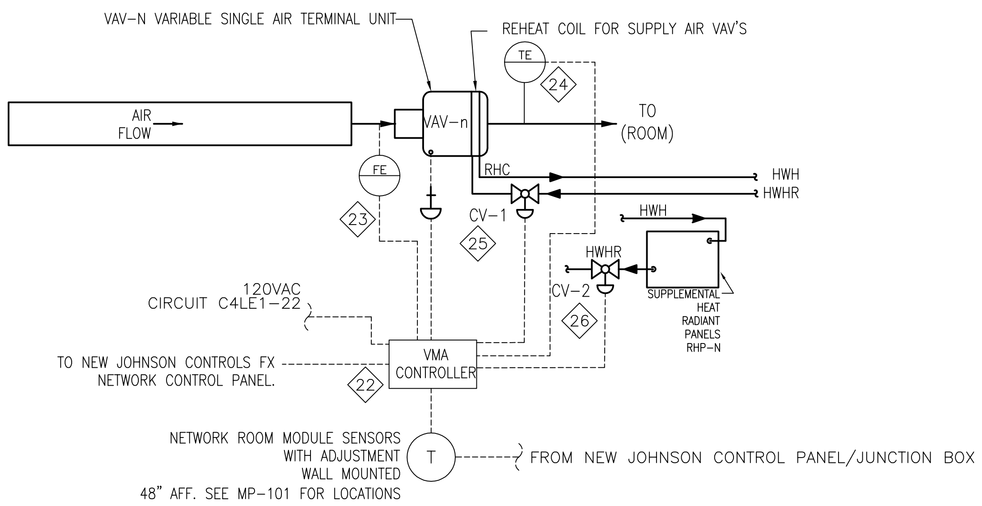

2 MI603 TYPICAL VAV TERMINAL UNIT (VAV-N) DIAGRAM
NTS 29 PLS. SUPPLY AIR

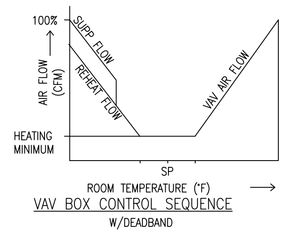

VAV BOX CONTROL SEQUENCE
W/DEADBAND

A. SET POINTS SHALL BE SET AS FOLLOWS:
COOLING 75°F (ADJ)
HEATING 70°F(ADJ)
DEADBAND OF 5° F BETWEEN HEATING AND COOLING SET POINTS WILL BE MAINTAINED.
B. UPON FALL IN SPACE TEMPERATURE THE VAV DAMPER WILL MODULATE TO MINIMUM POSITION.
C. UPON FURTHER DROP IN SPACE TEMPERATURE VALVE CV-1 WILL MODULATE TO MAINTAIN SET POINT ± .5° F. THE ADJUSTABLE TOLERANCE OF ± .5° F HAS BEEN SELECTED TO PREVENT VALVE HUNTING
D. VALVE CV-2 SHALL BE ENABLED WHEN OUTSIDE AIR FALLS BELOW 40° F (ADJ) AND VALVE CV-1 HAS BEEN MODULATED OPEN ABOVE 30% (ADJ). VALVE CV-2 SHALL MAINTAIN SET POINT ± .5° F. THE ADJUSTABLE TOLERANCE OF ± .5°F HAS BEEN SELECTED TO PREVENT VALVE HUNTING.
E. THE REVERSE SHALL OCCUR ON THE RISE IN SPACE TEMPERATURE.

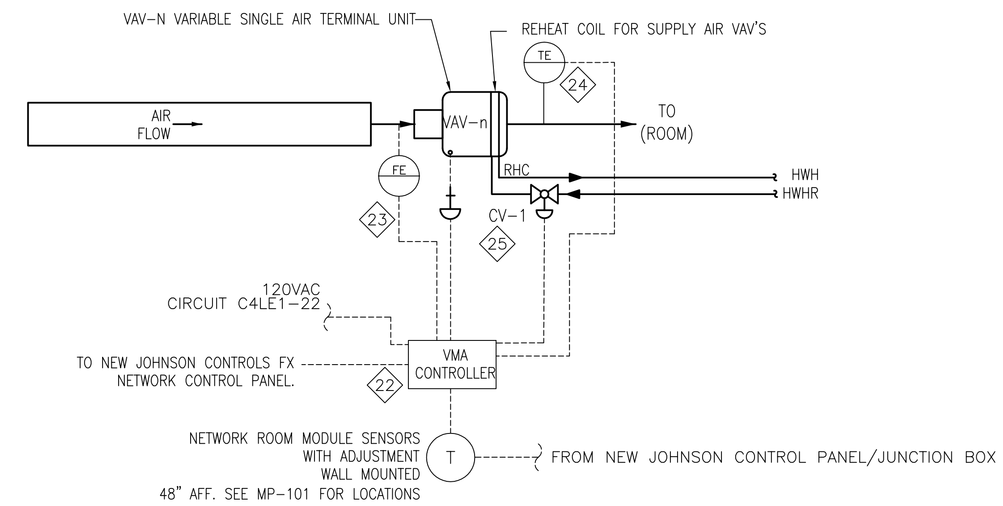

3 MI603 TYPICAL VAV TERMINAL UNIT (VAV-N) DIAGRAM
NTS 4 PLS. SUPPLY AIR

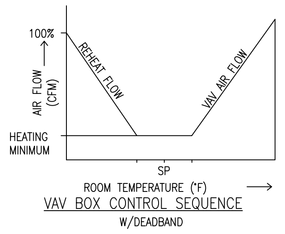

VAV BOX CONTROL SEQUENCE
W/DEADBAND

A. SET POINTS SHALL BE SET AS FOLLOWS:
COOLING 75°F (ADJ)
HEATING 70°F(ADJ)
DEADBAND OF 5° F BETWEEN HEATING AND COOLING SET POINTS WILL BE MAINTAINED.
B. UPON FALL IN SPACE TEMPERATURE THE VAV DAMPER WILL MODULATE TO MINIMUM POSITION.
C. UPON FURTHER DROP IN SPACE TEMPERATURE VALVE CV-1 WILL MODULATE TO MAINTAIN SET POINT ± .5° F. THE ADJUSTABLE TOLERANCE OF ± .5° F HAS BEEN SELECTED TO PREVENT VALVE HUNTING
D. THE REVERSE SHALL OCCUR ON THE RISE IN SPACE TEMPERATURE.

SEQUENCE OF OPERATION FOR VARIABLE AIR VOLUME AIR HANDLING UNIT WITH MINIMUM OUTSIDE AIR

1. General

UNIT IS NORMALLY STARTED AND STOPPED REMOTELY AT THE ECC. H-O-A SWITCH SHALL BE KEPT IN THE "AUTO" POSITION. "HAND" AND "OFF" POSITIONS SHALL BE USED ONLY FOR MAINTENANCE. WHEN THE UNIT IS "OFF" D-1, D-2, D-3, SHALL BE FULLY CLOSED. WHEN THE UNIT IS "ON" SD-1 AND SD-2 SHALL BE FULLY OPEN AND OTHER DAMPERS SHALL OPEN AND MODULATE INACCORDANCE WITH THE FOLLOWING

2. Temperature Control

SUPPLY AIR (SA) TEMPERATURE, SENSED BY TT-1, SHALL BE MAINTAINED AT SETPOINT VIA DIGITAL CONTROL PANEL BY MODULATING CHILLED WATER CONTROL VALVE FCV-1 IN SUMMER. IN WINTER THE CHILLED WATER VALVE SHALL BE CLOSED AND THE TEMPERATURE CONTROL SHALL BE PERFORMED AT THE VAV BOXES AND AT THE RADIANT PANELS.

3. Air Flow Control

MODE A1 – NORMAL MODE BASED ON OUTSIDE AIR MODULATION (PREFERRED)

THE RETURN AIR FLOW (RA) FAN SHALL BE CONTROLLED BY THE DIGITAL CONTROL PANEL MODULATING THE RETURN FAN RF 59 VARIABLE SPEED MOTOR CONTROLLER TO MAINTAIN SPECIFIED SUPPLY AIR FLOW LEAVING THE AHU (FT2) PER THE ATTACHED BALANCING TABLE DRAWINGS MH 600 AND MH 601 AT THE INITIAL SETPOINT TOTALS.

MINIMUM OUTSIDE AIR FLOW IS CALCULATED AT 2000 CFM. THE OUTSIDE AIR NEEDS TO BE ABOVE THE MINIMUM AIR FLOW OF 2000, OR EQUAL TO THE MEASURED EXHAUST FLOW FOR A NEUTRAL SUITE PRESSURIZATION. (FOR A POSITIVE SUITE PRESSURIZATION THE OFFSET FLOW SHOULD BE INCREASED BY 200 CFM AND FOR NEGATIVE SUITE PRESSURIZATION THE OFFSET FLOW SHOULD BE DECREASED BY 200 CFM).

OUTSIDE MAKEUP AIR (OA) DAMPER D1 SHALL BE MODULATED TO MAINTAIN AN OUTSIDE AIRFLOW FT1 ABOVE THE EXHAUST AIR FLOW FT 4 BY AN OFFSET VALUE. THE OFFSET VALUE SHALL BE CALCULATED BY THE FOLLOWING:
FOR EXHAUST FLOWS LESS THAN 2000 CFM: OFFSET FLOW=2000-EXHAUST FLOW.
FOR EXHAUST FLOW ABOVE 2000, OFFSET VALUE SHALL BE 0 AND THE OUTSIDE AIR SHALL MATCH EXHAUST AIR FLOW. THE OFFSET VALUE SHALL RANGE FROM 100 CFM (2000 - MINIMUM EXHAUST 1900) TO 0 CFM FOR EXHAUST FLOW ABOVE 2000 CFM.

4. Static Pressure Control Alternative

THE PRIMARY MODE OF CONTROL SHALL BE BY DIRECTLY CONTROLLING THE REQUIRED AIR FLOW RATES BY VFDS AND DAMPER. FOR ADDITIONAL FLEXIBILITY A STATIC PRESSURE CONTROL MODE SHALL ALSO BE INCLUDED TO PROVIDE ALTERNATE MODE
4.1. SUPPLY AIR DUCT STATIC PRESSURE WILL BE MAINTAINED AT SETPOINT PC*SA BY MODULATING THE RETURN FAN SPEED.

EXHAUST FAN SHALL MAINTAIN REQUIRED FLOW FT 4 BY MODULATING D4

RETURN TO SUPPLY VOLUME DIFFERENTIAL FC*REF WILL BE MAINTAINED BY MODULATING OUTSIDE AIR DAMPER AND ACCOUNT FOR THE FLOWS AT EXHAUST FANs EF-28 MEASURED BY FT-4.

4.2. NEW EXHAUST FAN EF 28 SHALL BE MODULATED BY FAN CONTROLLER TO MAINTAIN SUCTION PRESSURE AT AI-4.

5. Automatic Shutdown/restart
5.1. WHEN SMOKE IS DETECTED BY SUPPLY SMOKE DETECTOR SD*SA (existing fire dampers) THE UNIT WILL SHUT "OFF" THROUGH HARD WIRING AND SOFTWARE. AN ALARM SENT TO THE ECC. AND THE OUTDOOR AIR AND SMOKE DAMPERS WILL CLOSE. WHEN THE FIRE ALARM SYSTEM IS RESET, THE DAMPERS WILL OPEN AND THE END SWITCHES WILL ALLOW THE SUPPLY FAN TO START.

5.2. EXHAUST FANS SERVING AREA OF THE SUPPLY FAN SHALL CONTINUE TO RUN. SUPPLY FAN SHALL RESTART AND FIRE DAMPERS SHALL OPEN WHEN FIRE ALARM CIRCUIT IS RESET.

6. Emergency Constant Speed Operation
6.1. UPON FAILURE OF THE VFD, THE RETURN FANS SHALL BE STARTED/STOPPED MANUALLY AT THE DIGITAL CONTROL PANEL OR THE ECC THROUGH THE BY-PASS STARTER. FANS SHALL THEN BE OPERATED AT CONSTANT SPEED.

7. Alarms
7.1. DURING THE OCC MODE, ALARM VALUES AND CRITICAL LEVELS WILL BE WRITTEN TO ANALOG AND BINARY OBJECTS. CONTROLLED VARIABLES ALARMS WILL TRACK SETPOINT ADJUSTMENTS. TIME DELAYS WILL ALLOW UNIT TO STABILIZE BEFORE ALARMS ARE ACTIVATED AFTER STARTUP. SEASONAL CONTROL LOOP ALARM VALUES WILL BE DELETED DURING DISABLED CONDITIONS. THESE ALARMS WILL BE REWRITTEN TO THE OBJECT DURING THE OCCUPIED CONDITIONS. I.E. HUMIDITY CONTROL LOOP, ETC.

7.2. FREEZE PROTECTION AND SMOKE DETECTOR ALARMS ARE ALWAYS ACTIVE.

7.3. DURING THE UNOCC MODE, ALARM VALUES AND CRITICAL LEVELS WILL BE DELETED TO ANALOG AND BINARY OBJECTS. THIS PREVENTS NUISANCE ALARMS WHEN THE UNIT HAS BEEN COMMANDED OFF. THERE ARE SEPARATE CONTROL SYSTEMS TO INDICATE THAT AN AHU IS ACTUALLY NOT OPERATING, WITHOUT THE USE OF ALARM NOTIFICATION BOXES.

7.4. ALL CRITICAL 1 ALARMS WILL ALSO NOTIFY THE CHILLER PLANT OPERATOR, AND CONTROL TECHNICIAN, VIA A PAGER.

8. HUMIDITY CONTROL
RETURN (OR EXHAUST) AIR HUMIDITY SHALL BE MONITORED. ON A CALL FOR HUMIDIFICATION,
HUMIDIFIER VALVE FCV-3 SHALL MODULATE TO MAINTAIN THE RETURN (OR EXHAUST) AIR
HUMIDITY SET POINT TO 30% (ADJUSTABLE). PRIOR TO ACTIVATION OF FCV-3, THE ON/OFF
CONTROL VALVE V-6 SHALL BE ENABLED THROUGH ECC AND JACKET TEMPERATURE SENSED
BY TSH SHALL BE WARM ENOUGH TO PREVENT CONDENSATION. THE HIGH LIMIT HUMIDITY
SENSOR, LOCATED IN THE SUPPLY AIR DUCT AFTER THE HUMIDIFIER SHALL DISABLE THE HUMIDIFIER AND GIVE AN ALARM SIGNAL TO THE ECC, IF THE SUPPLY AIR
HUMIDITY EXCEEDS 90% RH (ADJUSTABLE). THE AIRFLOW SWITCH SHALL PROVE AIRFLOW
BEFORE HUMIDITY CONTROLS ARE ACTIVATED.

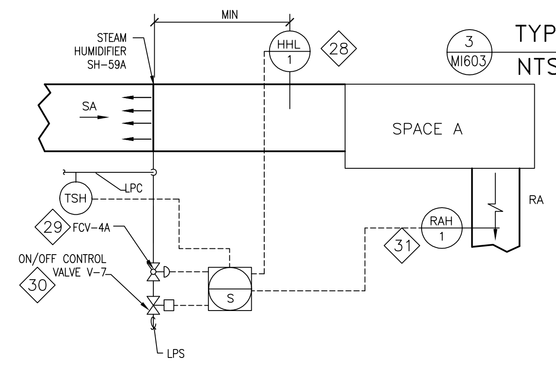

4 MI603 HUMIDIFIER SH-59A
NTS CONTROL DIAGRAM

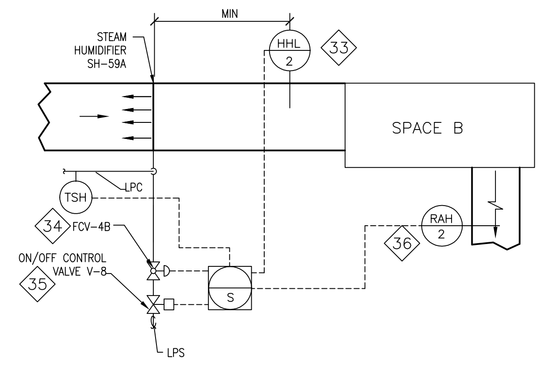

5 MI603 HUMIDIFIER SH-59B
NTS CONTROL DIAGRAM

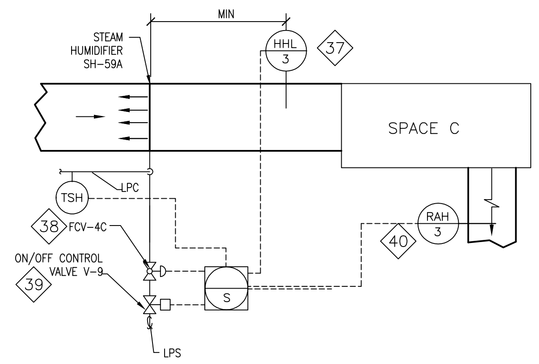

6 MI603 HUMIDIFIER SH-59C
NTS CONTROL DIAGRAM

CONTROL DIAGRAM LEGEND

- LOCAL CONTROL PANEL (REFER TO THIS DWG AND MI602) FACILITY EXPLORER FX-16
- S — SUPERVISORY CONTROL PANEL (SCP-1) (REFER TO MI602) FACILITY EXPLORER FX-60
- SPD — LOCAL SYSTEM CONTROL COMPONENT (REFER TO THIS DWG AND MI602)
- N — SYSTEM COMPONENT POINT ID NUMBER (FOR MORE SAMPLE POINTS LIST TABLE REFER TO MI602)
- ---- SIGNAL CABLE
  BACNET CABLE
  ETHERNET CABLE

NOTES:
1. INSTALLATION/COMMISSIONING CONTRACTOR TO INSTALL, TEST AND COMMISSION A FUNCTIONALLY OPERATIVE AND INTEGRATED SYSTEM. ENSURE A WELL FUNCTIONING SYSTEM THAT WOULD PROVIDE ADEQUATE CONTROL OF TEMPERATURE, PRESSURE, HUMIDITY FOR THE RESPECTIVE PLACES.

65% SUBMITTAL SET	01.07.2012
95% SUBMITTAL SET	03.07.2012
BID DOCUMENTS SUBMITTAL SET	05.14.2012
REVISION - CORRECTED AHU-59 ARRANGEMENT	8-28-2012
REVISION - ADDED EF-206 AND VFD-6 FOR EF-206	8-28-2012
REVISION - MODIFIED AHU-59 SEQUENCE OF OPERATION	8-28-2012
Revisions:	Date

Dept. of Veterans Affairs
Richard L. Roudebush
VA Medical Center
1481 W. 10th Street
Indianapolis, In 46202

CONSULTANTS:
BAYSINGER DESIGN GROUP
401 North Market Street
Marion, Illinois 62959
Telephone 618.998.8015
Fax 618.998.8032

CERTIFIED BY:
STATE OF MICHIGAN ASLAM MUKHTAR HUSAIN ENGINEER No. 6201035544 LICENSED PROFESSIONAL ENGINEER

ARCHITECT/ENGINEERS:
AMERICAN STRUCTUREPOINT INC.
7260 Shadeland Station | Indianapolis, Indiana 46256
TEL 317.547.5580 | FAX 317.543.0270
www.structurepoint.com

EnerTronics ENERGY TO EXCEL
Engineering Corporation
The Fairmont Building
9245 Calumet Ave. Suite 205,
Munster, IN 46321
(219) 836-2120 Fax (219) 836-1129

Drawing Title: 4TH FLOOR HVAC CONTROL DIAGRAMS AND SEQUENCE OF OPERATIONS		Project Title: RENOVATE FOR CLINICAL IMPROVEMENTS		Project Number: 583C16254	BID DOCUMENTS
				Building Number: 1	Engineering and Facilities Management Services
PROJECT ENGINEER: Mary Piwowarski	Approved: Engineering Chief	Location: 3 WEST - C WING & 4 EAST - C WING		Drawing Number: MI-603	
SCALE: 1/8"= 1'-0"	Approved: Service Chief	Date: MAY 14, 2012	Checked / Drawn	3FY12	Department of Veterans Affairs

RLR VAMC FORM 09-JD0227

PLOT DATE: 6/27/2012 3:06 PM
CAD DRAWING FILE LOCATION: Z:\1 PROJECTS\1051 CLINICAL IMPROVEMENTS INDIANAPOLIS VA\BID DOCUMENTS REVISION5\MI-603.DWG