30

PIPE HANGERS

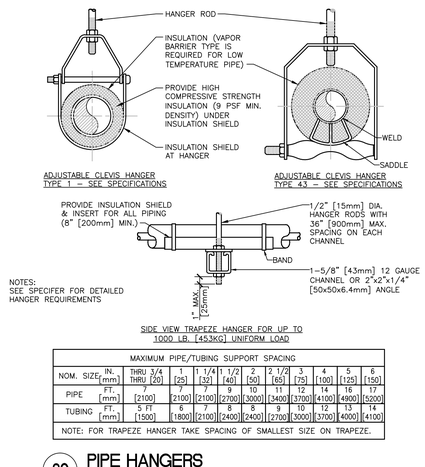

MAXIMUM PIPE/TUBING SUPPORT SPACING											
NOM. SIZE	IN. [mm]	THRU 3/4 THRU [20]	1 [25]	1 1/4 [32]	1 1/2 [40]	2 [50]	2 1/2 [65]	3 [75]	4 [100]	5 [125]	6 [150]
PIPE	FT. [mm]	7 [2100]	7 [2100]	7 [2100]	9 [2700]	10 [3000]	11 [3400]	12 [3700]	14 [4100]	16 [4900]	17 [5200]
TUBING	FT. [mm]	5 FT [1500]	6 [1800]	7 [2100]	8 [2400]	8 [2400]	9 [2700]	10 [3000]	12 [3700]	13 [4000]	14 [4100]
NOTE: FOR TRAPEZE HANGER TAKE SPACING OF SMALLEST SIZE ON TRAPEZE.											

30 PIPE HANGERS

NTS

31

SMALL PIPE ANCHOR

PIPE ANCHOR SCHEDULE										
D		P		C		N		S		BOLT PATTERN
IN	MM	IN	MM	IN	MM	IN	MM	IN	MM	
4"	102	9 3/8"	16	3/4"	19	4"	102	3/4"	19	
3"	76	7 1/2"	13	1/2"	13	4"	102	5/8"	16	
2 1/2"	64	7 1/8"	10	3/8"	10	4"	102	5/8"	16	
2"	51	7 1/8"	10	3/8"	10	4"	102	5/8"	16	
1 1/2"	38	6 1/8"	10	1/4"	6	4"	102	1/2"	13	

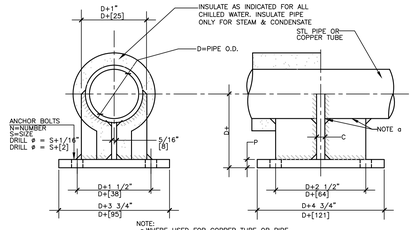

31 SMALL PIPE ANCHOR 1 1/2"– 4"

NTS

32

SUPPORT/ANCHOR FOR PIPE RISERS

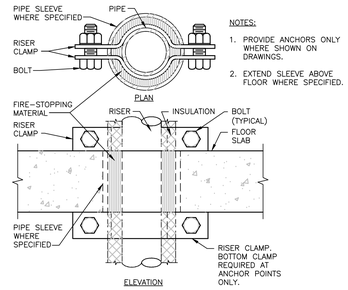

32 SUPPORT/ANCHOR FOR PIPE RISERS

NTS

33

PIPE TRENCH IN BUILDING

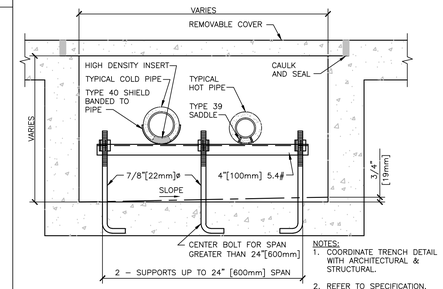

33 PIPE TRENCH IN BUILDING

NTS

34

ROOF-MOUNTED VRF HEAT PUMP DETAIL

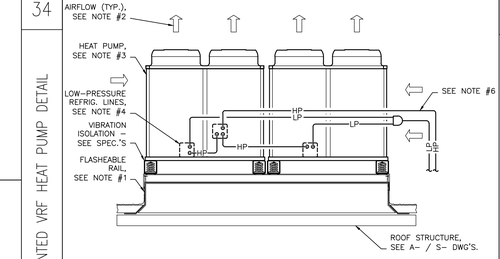

DETAIL NOTES:
1. PROVIDE FLASHEABLE RAIL(S), FULL PERIMETER OF HEAT PUMP UNIT. PROVIDE SUPPORT STEEL AS REQUIRED FOR BRACING / SUPPORT.
2. INSTALL UNIT TO MAINTAIN CLEARANCE AREA FOR SERVICE / AIRFLOW – MINIMUM OF 4'–0" AROUND, BUT NOT LESS THAN REQUIRED BY MANUFACTURER.
3. HEAT PUMP UNIT(S) – REFER TO SCHEDULE FOR QUANTITY AND CONFIGURATION.
4. PROVIDE TWINNING KIT FOR HIGH– / LOW– PRESSURE REFRIGERANT LINES. EXTEND TO REFRIGERANT CONTROLLER.
5. EXTEND CONTROL LINES FROM (OUTDOOR) HEAT PUMP TO (INDOOR) REFRIGERANT CONTROLLER.
6. MAKE ALL ROOF PENETRATIONS AT WATER–TIGHT CURB – SEE DETAIL.

35

VRF CONCEALED FAN COIL DETAIL

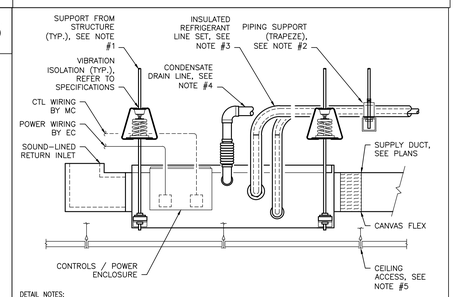

DETAIL NOTES:
1. PROVIDE THREADED ROD AND RESTRAINED SPRING ISOLATORS (AS SPECIFIED) TO SUPPORT UNIT.
2. PROVIDE UNI–STRUT (OR SIMILAR) TRAPEZE HANGERS AND PIPE CLAMPS. INSTALL PIPEWORK IN A NEAT AND WORKMANLIKE MANNER. RUN PARALLEL TO BUILDING STRUCTURE.
3. EXTEND REFRIGERANT LINE SETS TO ASSOCIATED BRANCH CIRCUIT CONTROLLER. REFER TO VRF PIPING DIAGRAM FOR PIPE ROUTING AND SIZES. INSULATE ALL REFRIGERANT LINES.
4. PROVIDE MANUFACTURER'S CONDENSATE LIFT KIT (MAXIMUM OF 20" LIFT). TERMINATE AT NEAREST INDIRECT WASTE RECEPTOR. WHERE CONDENSATE CAN DRAIN BY GRAVITY, LIFT KIT MAY BE OMITTED.
5. LAY–IN CEILING IS SHOWN. FOR HARD (GWB / PLASTER) CEILINGS PROVIDE ACCESS DOORS IN ACCORDANCE WITH FCU MANUFACTURER'S REQUIREMENTS FOR SERVICE.

36

DETAIL FOR SUPPORTING PIPE ON ROOF

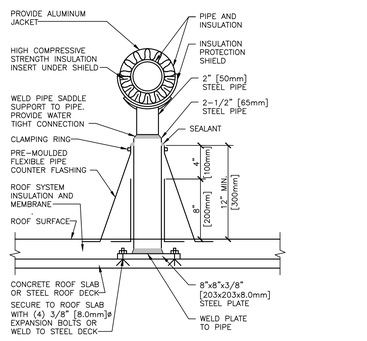

36 DETAIL FOR SUPPORTING PIPE ON ROOF

NTS

37

VIBRATION ISOLATION BASES

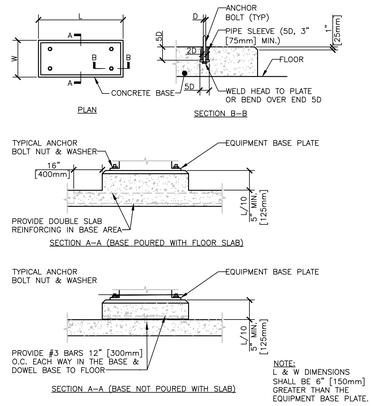

37 CONCRETE EQUIPMENT BASES

NTS

38

VRF CASSETTE FAN COIL DETAIL

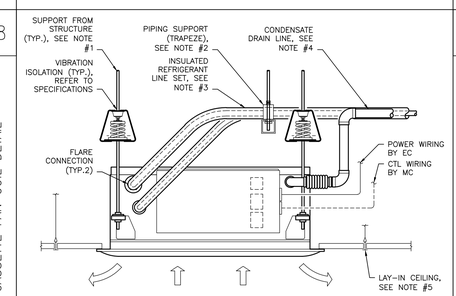

DETAIL NOTES:
1. PROVIDE THREADED ROD AND RESTRAINED SPRING ISOLATORS (AS SPECIFIED) TO SUPPORT UNIT.
2. PROVIDE UNI–STRUT (OR SIMILAR) TRAPEZE HANGERS AND PIPE CLAMPS. INSTALL PIPEWORK IN A NEAT AND WORKMANLIKE MANNER. RUN PARALLEL TO BUILDING STRUCTURE.
3. EXTEND REFRIGERANT LINE SETS TO ASSOCIATED BRANCH CIRCUIT CONTROLLER. REFER TO VRF PIPING DIAGRAM FOR PIPE ROUTING AND SIZES. INSULATE ALL REFRIGERANT LINES.
4. PROVIDE MANUFACTURER'S CONDENSATE LIFT KIT (MAXIMUM 24" LIFT). TERMINATE AT NEAREST INDIRECT WASTE RECEPTOR. WHERE CONDENSATE CAN DRAIN BY GRAVITY, LIFT KIT MAY BE OMITTED.
5. CUT / PATCH FOR INSTALLATION OF CEILING–MOUNTED UNITS. PROVIDE ADDITIONAL GRID–TEE AS REQUIRED.

39

ACCESS PLATFORM FOR ROOFTOP AIR HANDLING UNIT

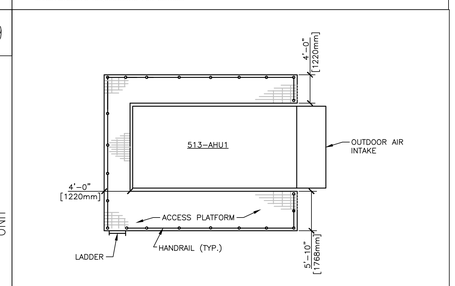

NOTES:
1. SEE ARCH FOR FLASHING & ROOFING DETAILS.
2. SEE STRUCTURAL FOR TIE IN TO STRUCTURAL MEMBERS.
3. TOP OF PLATFORM ELEVATION TO BE AT THE AIR HANDLING UNIT BOTTOM ELEVATION/HORIZONTAL DISCHARGE CURB TOP ELEVATION.

DAYTANK PIPING DETAIL

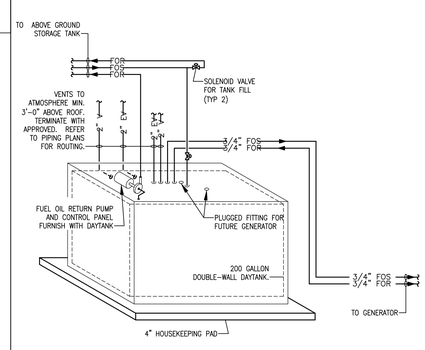

41

FIELD APPLIED METAL JACKETING OVER PIPE INSULATION DETAIL

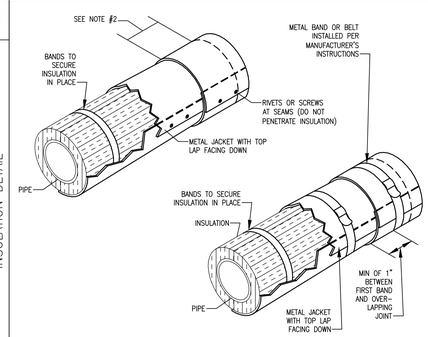

NOTES:
1. LONGITUDINAL JACKETING SEAMS POSITIONED AT 3 OR 9 O'CLOCK ONLY WITH TOP LAP FACING DOWN FOR WEATHER PROOFING.
2. OVERLAP JACKETING A MINIMUM OF 1–1/2".
3. INSTALL HEAT TRACE PER MANUFACTURER'S RECOMMENDATIONSE.

42

NOT USED

43

NOT USED

BID DOCUMENTS

FULLY SPRINKLERED

Revisions:	Date

ARCHITECT:

C.C. HODGSON ARCHITECTURAL GROUP

WU-CHEN CHANG REGISTERED 18806 STATE OF WEST VIRGINIA PROFESSIONAL ENGINEER 2012

ENGINEERS:

Westlake Reed Leskosky

1634 EYE ST, NW, STE 900 WASHINGTON, DC 20006

Drawing Title: MECHANICAL DETAILS

Approved: Project Director

Project Title: RELOCATE DEMENTIA UNIT

Project Number: VA PN 613–207

Building Number: 513

Location: VAMC MARTINSBURG

Date: 08/06/2012 | Checked: SCS | Drawn: CJW

Drawing Number: M–503

Dwg. of –

Office of Construction and Facilities Management

VA FORM 08–6231

1