HOOD INFORMATION TABLE

HOOD NUMBER	HOOD MODEL	EXHAUST AIR FLOW REQUIREMENTS						GREASE EXTRACTOR				HOOD CONSTRUCTION	HOOD WEIGHT (LBS)
		EXHAUST CFM	T.A.B. PORT STATIC PRESSURE	TOTAL HOOD STATIC PRESSURE	EXHAUST COLLAR			QTY.	SIZE		TYPE		
					QTY.	LENGTH	WIDTH		L	H			
H–2	KVE	1208	.35"	.45"	1	12"	9"	3	20"	13"	KSA	ALL 18GA. 304 S.S.	407
								–	11"	13"			
–	–	–	–	–	–	–	–	–	–	–	–	–	–
								–	–	–			
–	–	–	–	–	–	–	–	–	–	–	–	–	–
								–	–	–			
–	–	–	–	–	–	–	–	–	–	–	–	–	–
								–	–	–			

TOTAL EXH. CFM = 1208

ELECTRICAL CONNECTION SCHEDULE

E1–H	120V, 15AMP – TIMER PANEL/HOOD LIGHT POWER – 3 WIRES

ANSUL R-102 SYSTEM

REMOTE MOUNTED:

(1) REGULATED RELEASE (WITH ONE TANK)

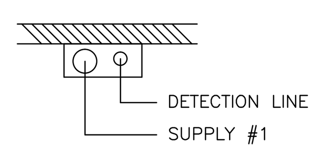

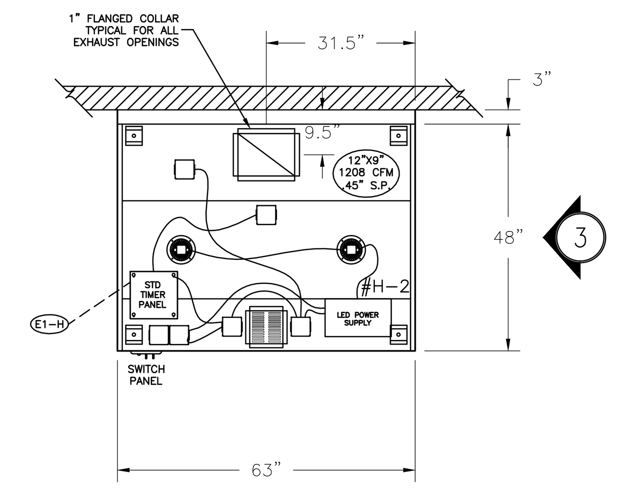

ITEM # H-2
PLAN VIEW

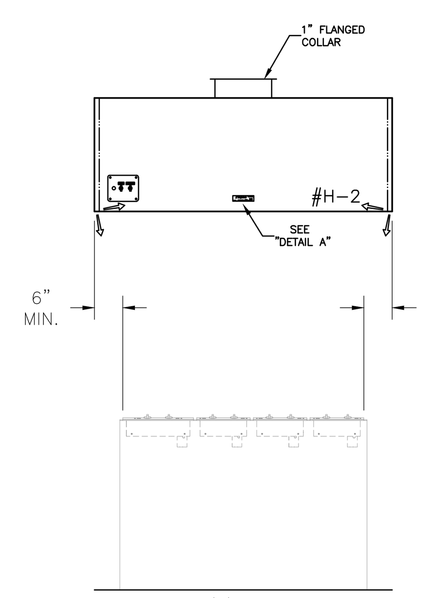

ITEM # H-2
ELEVATION VIEW

NOTE
T-STAT IS FACTORY PRE-SET FOR 85 DEGREES, IF SPACE CONDITIONS EXCEED 85 DEGREES WITHOUT COOKING TAKING PLACE, THEN A FIELD ADJUSTMENT OF THE T-STAT WILL BE REQUIRED BY PERSONNEL OTHER THAN HALTON. T-STAT IS A SAFETY INTERLOCK ONLY. IT IS NOT INTENDED AS A PRIMARY MEANS OF ENGAGING THE EXHAUST FAN.

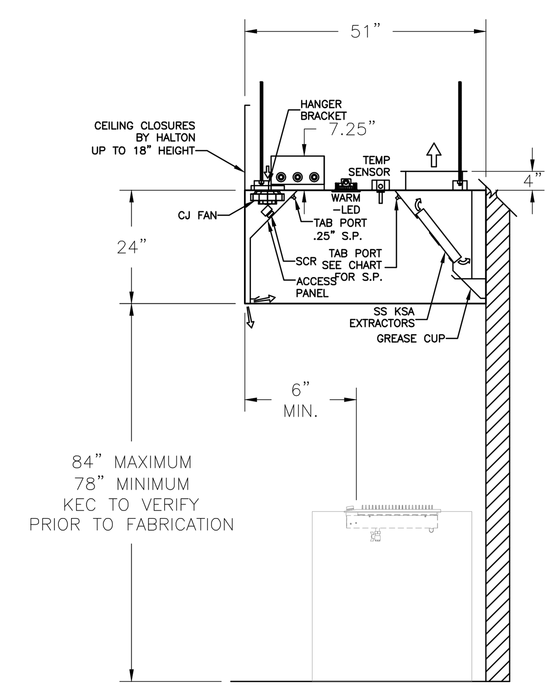

ITEM # H-2
SECTION VIEW

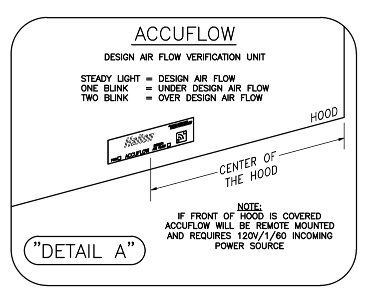

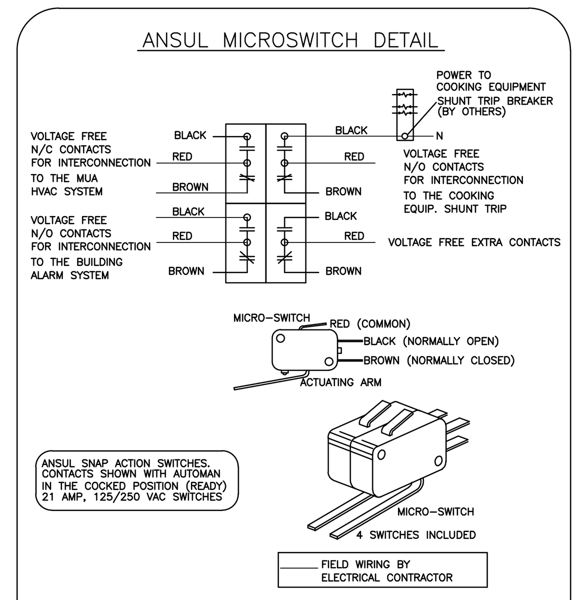

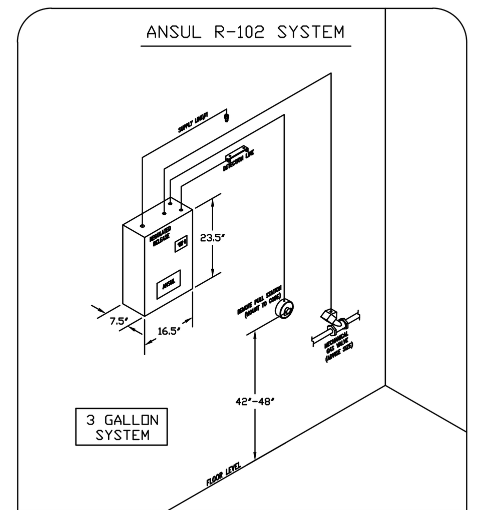

1) ANSUL R-102 FIRE SYSTEM
2) ONE TANK SYSTEM (3 GALLON)
3) 3/8" BLACK IRON PIPING WITH 3/8" S.S. APPLIANCE DROPS
4) MECHANICAL GAS VALVE = (ADVISE SIZE)

GENERAL SPECIFICATIONS

1– HOOD CONSTRUCTION AND DESIGN MEETS NFPA 96 AND UL 710 STANDARD.

2– HOOD IS NSF AND ETL LISTED UNDER THE FOLLOWING FILE NUMBER: ETL #3085193CLE–002

3– ALL INSTALLATION WORK IS TO BE PERFORMED BY QUALIFIED PERSONS AND IN ACCORDANCE WITH STATE AND LOCAL BUILDING CODE REQUIREMENTS.

4– THE INSTALLATION SHALL BE IN ACCORDANCE WITH NFPA 96, REMOVAL OF SMOKE AND GREASE LADEN VAPORS FROM COMMERCIAL COOKING EQUIPMENT.

5– ALL EXHAUST DUCTWORK AND TRANSITIONS ARE TO BE PROVIDED BY THE HVAC CONTRACTOR.

6– CLEARANCE FROM HOOD AND DUCTS TO COMBUSTIBLE MATERIAL SHALL BE PER APPLICABLE BUILDING CODES.

7– FOR PROPER OPERATION OF THE HOOD SYSTEM, IT IS THE RESPONSIBILITY OF THE GENERAL CONTRACTOR TO HAVE THE HOOD BALANCED AND TESTED TO ENSURE THAT THE EXHAUST AND SUPPLY REQUIREMENTS OF THE HOOD ARE MET.

INSTALLATION REQUIREMENTS

KITCHEN EQUIPMENT CONTRACTOR'S REQUIREMENTS

1– PROVIDE DRAWINGS TO APPROPRIATE TRADES REFERENCING UTILITY SERVICE AND COORDINATE FINAL CONNECTION.

2– DELIVER, ASSEMBLE AND INSTALL HALTON SYSTEM PER DRAWING.

3– FURNISH WIRING AND PLUMBING DIAGRAMS TO END USER.

4– THE K.E.C MUST INFORM HALTON OF ANY CHANGES IN EQUIPMENT OR BUILDING STRUCTURE. FIELD MODIFICATIONS ARE THE RESPONSIBILITY OF THE K.E.C.

5– IF HALTON MANUAL EXHAUST VOLUME DAMPERS ARE PROVIDED, THE K.E.C. IS RESPONSIBLE FOR THEIR INSTALLATION OR TO MAKE ARRANGEMENTS WITH OTHER TRADES FOR THEIR INSTALLATION.

ELECTRICAL CONTRACTOR'S REQUIREMENTS

1– PROVIDE AND CONNECT ALL REQUIRED VOLTAGES, CONNECTORS, WIRING, CONDUIT, ETC., PER NEC AND ALL APPLICABLE LOCAL CODES.

ELECTRICAL EQUIPMENT REQUIREMENTS

FLUORESCENT LIGHT FIXTURE 40 WATT MAX BULB= .67 AMP EA.

RECESSED INCANDESCENT LIGHT FIXTURE 150 WATT MAX BULB= 1.25 AMP EA.

GLOBE INCANDESCENT LIGHT FIXTURE 100 WATT MAX BULB= .83 AMP EA.

LED LIGHT FIXTURES= .30 AMP EA.

CAPTURE JET FAN= .72 AMP EA

ALL HOOD CIRCUITS ARE NOT TO EXCEED 15 AMP

LIGHT BULBS, IF REQUIRED, ARE TO BE PROVIDED BY OTHERS

CEILING HEIGHT NOTE

IF HALTON COMPANY IS TO PROVIDE CEILING CLOSURE PANELS, THE EXACT DIMENSION OF THE FINISHED CEILING HEIGHT MUST BE PROVIDED PRIOR TO RELEASE.

FINISHED CEILING HEIGHT A.F.F.: ____________

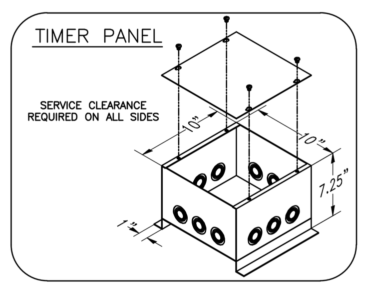

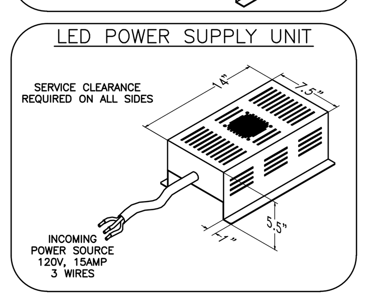

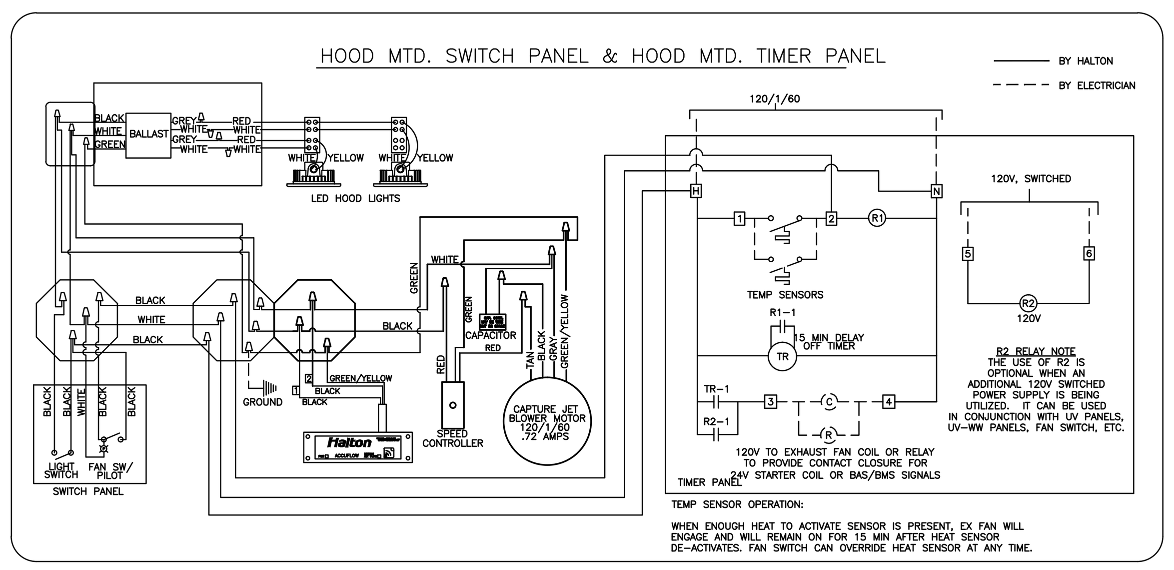

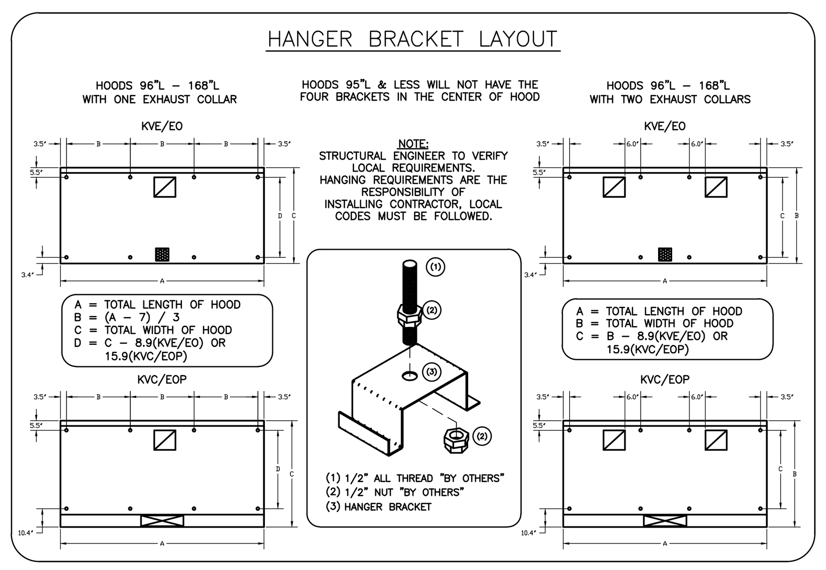

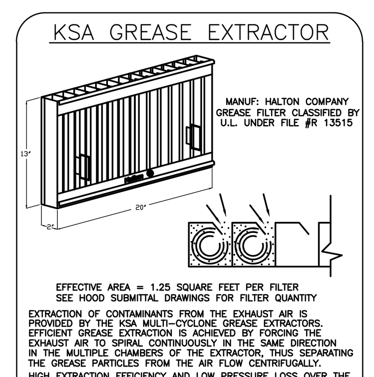

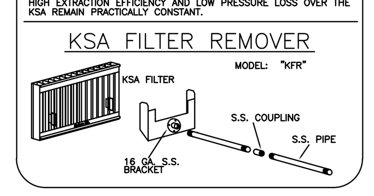

PERFORMANCE CRITERIA

OTHER MANUFACTURERS WISHING TO OFFER AN ALTERNATE TO THE SPECIFIED MANUFACTURER MUST APPLY FOR PERMISSION TO DO SO IN WRITING FROM THE OFFICE OF THE SPECIFYING CONSULTANT. APPLICATION MUST BE RECEIVED BY THE CONSULTANT AT LEAST TEN WORKING DAYS PRIOR TO THE BID DATE. ANY ALTERNATE SYSTEM MUST MEET CONSTRUCTION AND PERFORMANCE REQUIREMENTS AND EFFICIENCIES AS OUTLINED IN THIS SPECIFICATION.

REQUESTS FOR APPROVAL MUST INCLUDE GREASE FILTRATION PERFORMANCE DATA (MICRON SIZE VS. EXTRACTION EFFICIENCY) AND MANUFACTURERS OWN EXHAUST AIR FLOW CALCULATIONS BASED ON THE CONVECTIVE HEAT LOAD OF COOKING EQUIPMENT BENEATH THE HOOD.

EFFICIENCY COMPARISON DATA TO BE PERFORMED IN ACCORDANCE WITH THE MOST CURRENT ASTM STANDARD F1704 AND INCLUDE RESULTS FOR THE REQUIRED CAPTURE AND CONTAINMENT EXHAUST AIR FLOW IN ACCORDANCE WITH THE "TEST METHOD TO DETERMINE THE THRESHOLD OF CAPTURE AND CONTAINMENT." DATA MUST INCLUDE THERMAL IMAGING RESULTS VALIDATING CONFORMANCE TO ASTM F1704 AND SUPPLY AIR TEMPERATURE REQUIREMENT OF 74°F.

MAKE UP AIR WILL BE CALCULATED SO THAT THE SAME AMOUNT OF AIR WILL BE TAKEN FROM THE ZONE AS IS REQUIRED BY THE SPECIFIED SYSTEM. AN ADDITIONAL LOAD CANNOT BE PLACED ON THE KITCHEN HVAC SYSTEM.

MANUFACTURER MUST PROVIDE A WRITTEN GUARANTEE OF PERFORMANCE, ENSURING THE SPECIFYING ENGINEER THAT THE SYSTEM WILL PERFORM TO THE ENGINEER'S SATISFACTION WHEN INSTALLED AND BALANCED ACCORDING TO DESIGN AIR FLOWS AND RESULTS OF ASTM STANDARD F1704 TEST. (AS DETERMINED BY TAB PORTS AND PRESSURE VS. AIR FLOW CURVES.) CONSULTANT RESERVES THE RIGHT TO REJECT ANY SYSTEM WHICH, WHEN INSTALLED, DOES NOT PROVIDE CAPTURE AND CONTAINMENT AT THE THRESHOLD FLOW RATE DETERMINED IN ASTM F1704. REJECTED SYSTEM MUST BE REPLACED WITH SPECIFIED SYSTEM, WITH ALL REPLACEMENT COSTS PAID BY MANUFACTURER OF REJECTED SYSTEM.

ANY CHANGES IN THE SPECIFIED SIZING OF POWER WIRING, FAN SIZE, HORSEPOWER REQUIREMENTS, OR GAS LINES DUE TO THE USE OF ANY SYSTEM OTHER THAN THAT WHICH IS SPECIFIED IS THE RESPONSIBILITY OF THE ALTERNATE HOOD MANUFACTURER, AND MUST BE COORDINATED BY THE HOOD MANUFACTURER AND CONTRACTORS INVOLVED.

MAIL APPROVED DRAWINGS TO APPROPRIATE FACTORY BELOW: WEBSITE: WWW.HALTONCOMPANY.COM

HALTON CO. (CANADA)
1021 BREVIK PLACE
MISSISSAUGA, ON L4W 3R7
1-905-624-0301

HALTON CO. (USA)
101 INDUSTRIAL DRIVE
SCOTTSVILLE, KY 42164
1-270-237-5600

REV.	REVISION DESCRIPTION	BY	DATE
1	REVISED COOKLINE, HOOD DIMENSIONS, AIRFLOWS	BMC	04.11.12
2			
3			
4			
5			
6			
7			

PROJECT: VA MARTINSBURG
LOCATION: MARTINSBURG, WV
DRAWN BY: W.U. DATE: 03.05.12
SCALE: NOT TO SCALE
CONSULTANT: CINI

Halton

DRAWING TITLE: HOOD DETAILS
DRAWING No.: U12-130
REV. NO.: 1 SHEET NO.: 1 of 1

BID DOCUMENTS
FULLY SPRINKLERED

CONSULTANTS:

Cini•Little
CINI-LITTLE INTERNATIONAL, INC.
20251 CENTURY BOULEVARD, SUITE 375
GERMANTOWN, MD 20874-1114 USA
301-528-9700 OFFICE
301-528-9711 FAX
www.cinilittle.com

ARCHITECT/ENGINEERS:

Drawing Title	Foodservice Equipment Ventilator Drawing
Project Title	RELOCATE DEMENTIA UNIT
Project Number	VA PN 613-107
Building Number	513
Drawing Number	QF106
Approved: Project Director	
Location	VAMC MARTINSBURG
Date	8/6/2012
Checked	LKL
Drawn	CAD

Revisions: Date

Office of Construction and Facilities Management

Department of Veterans Affairs

Dwg. of

VA FORM 08-6231