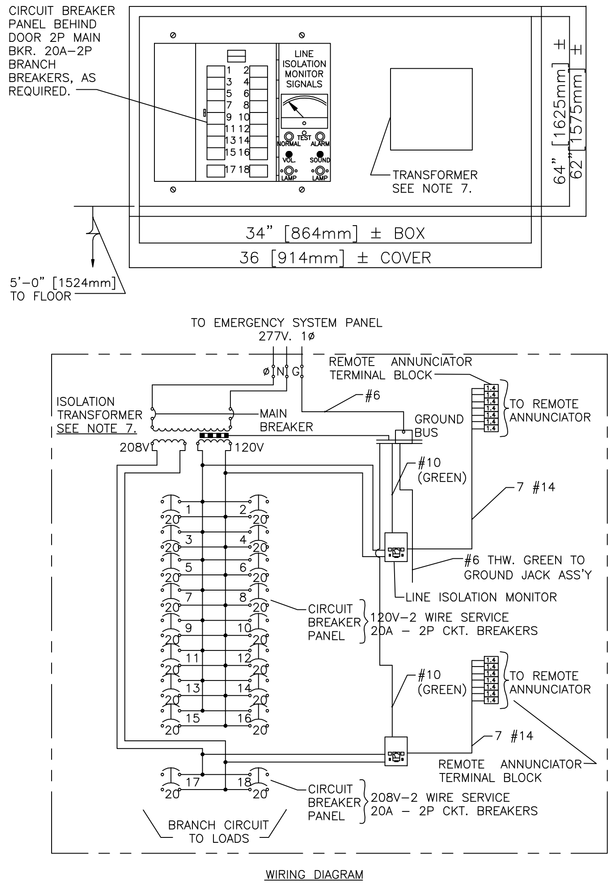

WIRING DIAGRAM

NOTE:

1. ISOLATION POWER PANELS:
   a. PANEL SHALL BE LISTED AS COMPLETE ASSEMBLY BY UNDERWRITER'S LABORATORIES. INC.
   b. PANEL SHALL BE FLUSH MOUNTED AND SHALL CONSIST OF THREE PIECES, INCLUDING NON–VENTILATED TYPE GALVANIZED CODE GAUGE STEEL BACK BOX, BOLT–IN TYPE CHASSIS AND #304 STAINLESS STEEL TRIM PANEL WITH #4 SATIN FINISH.
   c. ISOLATION TRANSFORMER SHALL BE DRY TYPE WITH ELECTROSTATIC SHIELD, 10 KVA ARRANGED FOR 277V. PRIMARY, 208V/120V, SECONDARY.
   d. CIRCUIT BREAKER SHALL BE RATED FOR 120 VOLTS, 20 AMPERES, 2 POLE, BOLT–IN AND SHALL BE UL. APPROVED FOR THE SERVICE INTENDED.
   e. ALL PANEL WIRING SHALL BE FACTORY INSTALLED – ONLY EXTERNAL CONNECTIONS WILL BE MADE IN FIELD PANEL SHALL MAINTAIN SEGREGATION BETWEEN GROUNDED AND UNGROUNDED CIRCUITS – FIELD WIRING SHALL NOT ENTER THE TRANSFORMER COMPARTMENT.
   f. INCOMING LINE CONNECTIONS SHALL BE FOR COPPER CONDUCTORS.
   g. PANEL SHALL HAVE A REFERENCE GROUND BUS HAVING 20 BRANCH TERMINALS FOR #14 – #6 CU. WIRE, FOR CONNECTING SECONDARY CIRCUITS TO REMOTE RECEPTACLES, LIGHTS AND ALL EXPOSED CONDUCTIVE SURFACES.
   h. PANEL SHALL HAVE TERMINAL BLOCKS FOR FUTURE FIELD WIRING BETWEEN LIM AND REMOTE ANNUNCIATOR.
   i. ALL CONDUCTORS ON THE SECONDARY SIDE OF THE ISOLATION TRANSFORMER, BOTH FACTORY WIRING, & FIELD WIRING SHALL HAVE A MINIMUM OF 3/64" CROSS – LINKED POLYETHYLENE INSULATION WITH A DIELECTRIC CONSTANT OF 3.5 OR LESS AND AN INSULATION RESISTANCE CONSTANT OF 20,000 AT 60' F. EACH UNGROUNDED SECONDARY CONDUCTOR SHALL BE COLOR CODED AS FOLLOWS: ISOLATED CONDUCTOR No. 1 – ORANGE, ISOLATED CONDUCTOR No 2 – BROWN, GROUNDING CONDUCTOR – GREEN.
2. EACH BRANCH CIRCUIT FROM ISOLATION PANEL TO REMOTE DEVICES SHALL CONSIST OF 2 #12 & 1 #10 GROUND IN 3/4" [19mm] CONDUIT, PER SPECIFICATION SECTION 16675, ISOLATED POWER SYSTEMS. THIS INCLUDES SURGICAL LIGHT SWITCH CIRCUITS.
3. NO COMPOUND NOR LUBRICANT OF ANY KIND SHALL BE USED TO PULL ANY OF THE CONDUCTORS ON THE SECONDARY SIDE OF THE TRANSFORMER.
4. SPECIAL CARE SHALL BE TAKEN TO KEEP CONDUIT ENDS CAPPED UNTIL THE INSTALLATION OF THE CONDUITS IN ORDER TO KEEP THEM FREE FROM MOISTURE. SHOULD MOISTURE ACCIDENTALLY ENTER THE CONDUITS, THEY SHALL BE SWABBED AND THOROUGHLY DRIED BEFORE CONDUCTORS ARE PULLED.
5. INSTALL TWO SPARE 1" [25mm] CONDUITS FROM EACH ISOLATING PANEL TO ABOVE THE CEILING AND CAP FOR FUTURE USE.
6. PANELS SHALL BE VERTICAL OR HORIZONTAL ASSEMBLY.
7. MAXIMUM 7 1/2 KVA ISOLATION TRANSFORMER SIZE.

4 SINGLE OUTPUT VOLTAGE ISOLATED POWER PANEL

NTS

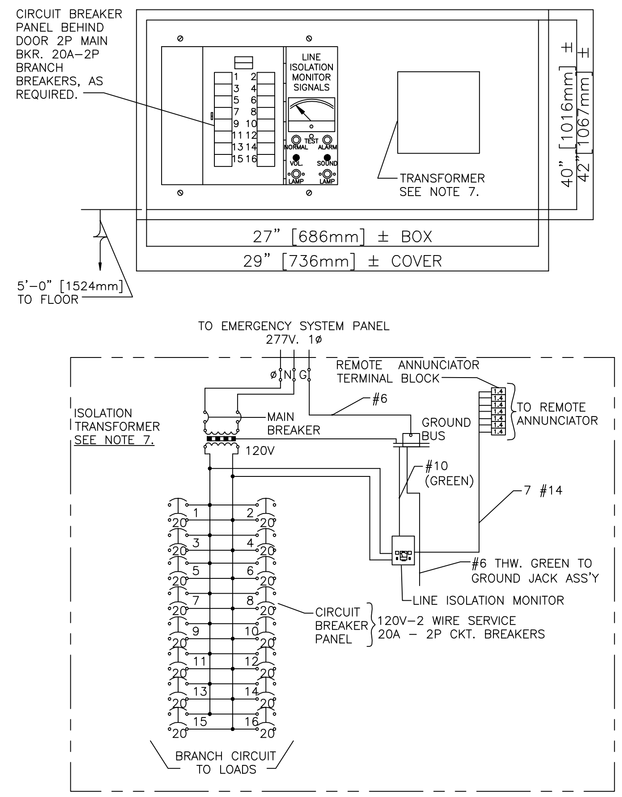

WIRING DIAGRAM

NOTE:

1. ISOLATION POWER PANELS:
   a. PANEL SHALL BE LISTED AS COMPLETE ASSEMBLY BY UNDERWRITER'S LABORATORIES. INC.
   b. PANEL SHALL BE FLUSH MOUNTED AND SHALL CONSIST OF THREE PIECES, INCLUDING NON–VENTILATED TYPE GALVANIZED CODE GAUGE STEEL BACK BOX, BOLT–IN TYPE CHASSIS AND #304 STAINLESS STEEL TRIM PANEL WITH #4 SATIN FINISH.
   c. ISOLATION TRANSFORMER SHALL BE DRY TYPE WITH ELECTROSTATIC SHIELD, 10 KVA ARRANGED FOR 277V. PRIMARY, 120V, SECONDARY.
   d. CIRCUIT BREAKER SHALL BE RATED FOR 120 VOLTS, 20 AMPERES, 2 POLE, BOLT–IN AND SHALL BE UL. APPROVED FOR THE SERVICE INTENDED.
   e. ALL PANEL WIRING SHALL BE FACTORY INSTALLED – ONLY EXTERNAL CONNECTIONS WILL BE MADE IN FIELD PANEL SHALL MAINTAIN SEGREGATION BETWEEN GROUNDED AND UNGROUNDED CIRCUITS – FIELD WIRING SHALL NOT ENTER THE TRANSFORMER COMPARTMENT.
   f. INCOMING LINE CONNECTIONS SHALL BE FOR COPPER CONDUCTORS.
   g. PANEL SHALL HAVE A REFERENCE GROUND BUS HAVING 20 BRANCH TERMINALS FOR #14 – #6 CU. WIRE, FOR CONNECTING SECONDARY CIRCUITS TO REMOTE RECEPTACLES, LIGHTS AND ALL EXPOSED CONDUCTIVE SURFACES.
   h. PANEL SHALL HAVE TERMINAL BLOCKS FOR FUTURE FIELD WIRING BETWEEN LIM AND REMOTE ANNUNCIATOR.
   i. ALL CONDUCTORS ON THE SECONDARY SIDE OF THE ISOLATION TRANSFORMER, BOTH FACTORY WIRING, & FIELD WIRING SHALL HAVE A MINIMUM OF 3/64" CROSS – LINKED POLYETHYLENE INSULATION WITH A DIELECTRIC CONSTANT OF 3.5 OR LESS AND AN INSULATION RESISTANCE CONSTANT OF 20,000 AT 60' F. EACH UNGROUNDED SECONDARY CONDUCTOR SHALL BE COLOR CODED AS FOLLOWS: ISOLATED CONDUCTOR No. 1 – ORANGE, ISOLATED CONDUCTOR No 2 – BROWN, GROUNDING CONDUCTOR – GREEN.
2. EACH BRANCH CIRCUIT FROM ISOLATION PANEL TO REMOTE DEVICES SHALL CONSIST OF 2 #12 & 1 #10 GROUND IN 3/4" [19mm] CONDUIT, PER SPECIFICATION SECTION 16675, ISOLATED POWER SYSTEMS. THIS INCLUDES SURGICAL LIGHT SWITCH CIRCUITS.
3. NO COMPOUND NOR LUBRICANT OF ANY KIND SHALL BE USED TO PULL ANY OF THE CONDUCTORS ON THE SECONDARY SIDE OF THE TRANSFORMER.
4. SPECIAL CARE SHALL BE TAKEN TO KEEP CONDUIT ENDS CAPPED UNTIL THE INSTALLATION OF THE CONDUITS IN ORDER TO KEEP THEM FREE FROM MOISTURE. SHOULD MOISTURE ACCIDENTALLY ENTER THE CONDUITS, THEY SHALL BE SWABBED AND THOROUGHLY DRIED BEFORE CONDUCTORS ARE PULLED.
5. INSTALL TWO SPARE 1" [25mm] CONDUITS FROM EACH ISOLATING PANEL TO ABOVE THE CEILING AND CAP FOR FUTURE USE.
6. PANELS SHALL BE VERTICAL OR HORIZONTAL ASSEMBLY.
7. MAXIMUM 10 KVA ISOLATION TRANSFORMER SIZE.

1 SINGLE OUTPUT VOLTAGE ISOLATED POWER PANEL

NTS

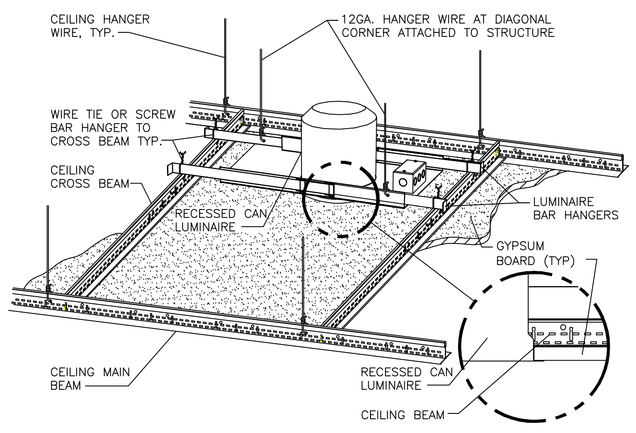

6 DOWNLIGHT MOUNTING - GYPBOARD CEILING

NTS

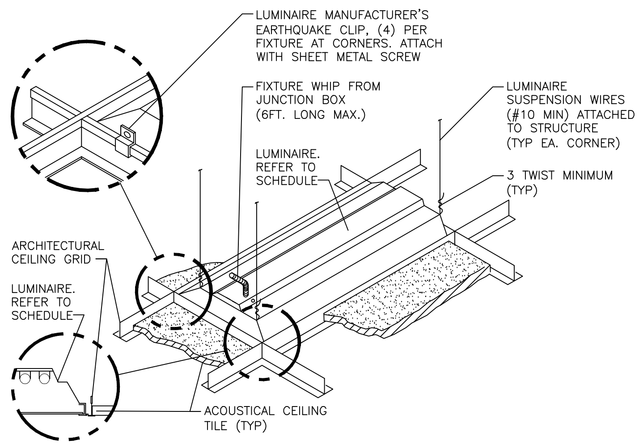

5 LUMINAIRE MOUNTING - LAY-IN CEILING

NTS

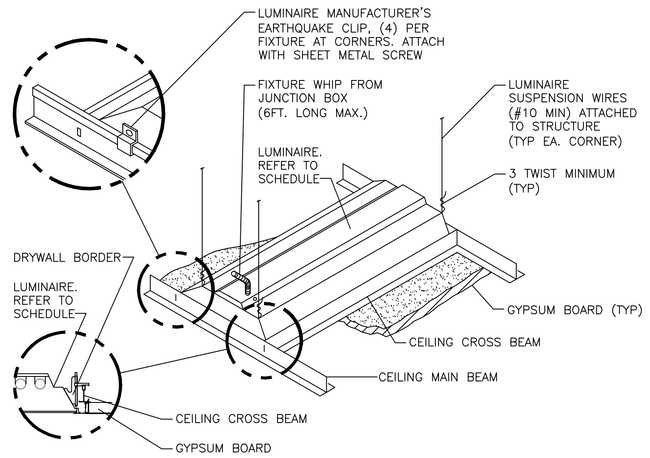

3 LUMINAIRE MOUNTING - GYPBOARD CEILING

NTS

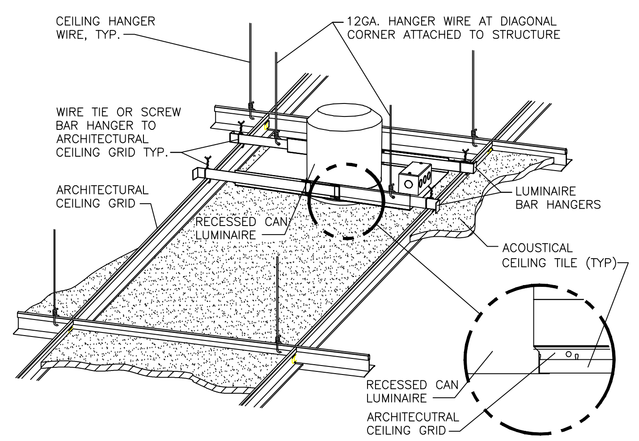

2 DOWNLIGHT MOUNTING - LAY-IN CEILING

NTS

FULLY SPRINKLERED

Revisions:	Date

CONSULTANTS:

CIVIL/STRUCTURAL:
MARTIN/MARTIN
CONSULTING ENGINEERS
12499 WEST COLFAX AVENUE
P.O. BOX 151500
LAKEWOOD, COLORADO 80215
303.231.1700
FAX 303.431.6866

MECHANICAL, PLUMBING, AND ELECTRICAL:
SSR Smith Seckman Reid, Inc.
8055 E. Tufts Avenue, Suite 1100
Denver, Colorado 80237
(303) 779-1222
FAX: (303) 694-9144
www.ssr-inc.com
SSR JOB #: 08270120

PLAN NORTH
SCALE: 1/8" = 1'-0"

ARCHITECT/ENGINEERS:
HEERY design
Heery International Inc.
820 16th Street Mall,
Suite 200,
Denver, CO 80202-3219
720.946.0276
Heery Project Number:
0830400

Drawing Title: ELECTRICAL DETAILS
Approved: Project Director
Project Title: SURGERY RENOVATION AND EXPANSION
Location: CHEYENNE, WY
Date: 04/24/09 | Checked: JLS | Drawn: JLS
Project Number: VA-259-09-RA-209
Building Number: BLDG. NO. 1
Drawing Number: ES501
Dwg. 39 of 44

Office of Construction and Facilities Management
Department of Veterans Affairs

VA FORM 08-6231