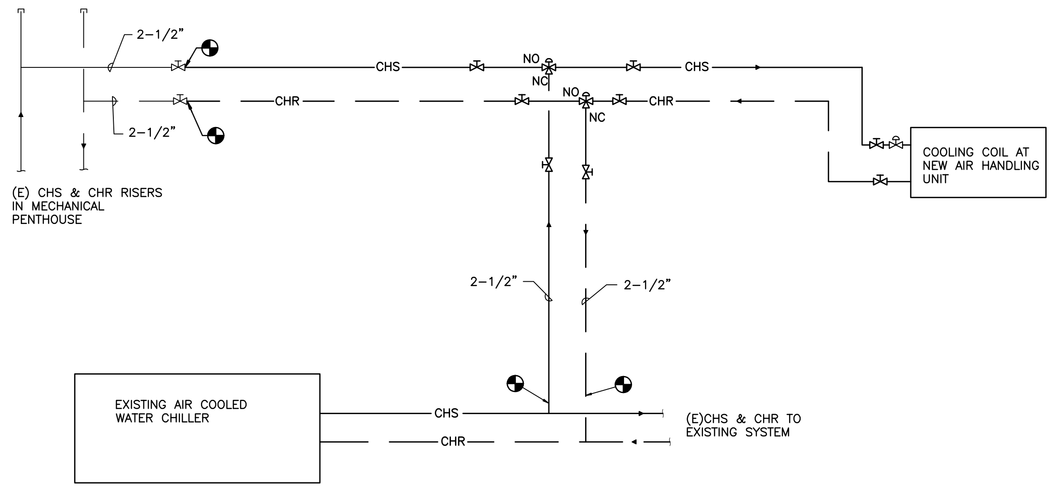

CHILLED WATER PIPING SCHEMATIC

SCALE: NONE

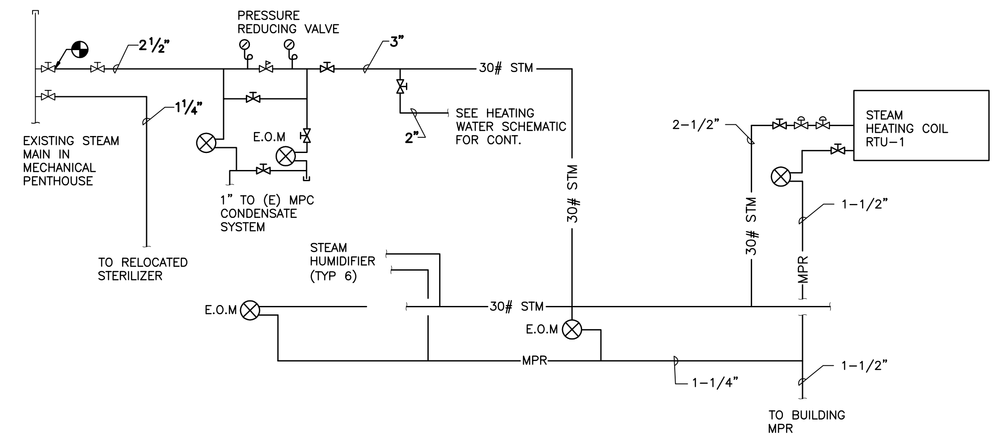

STEAM SYSTEM SCHEMATIC

SCALE: NONE

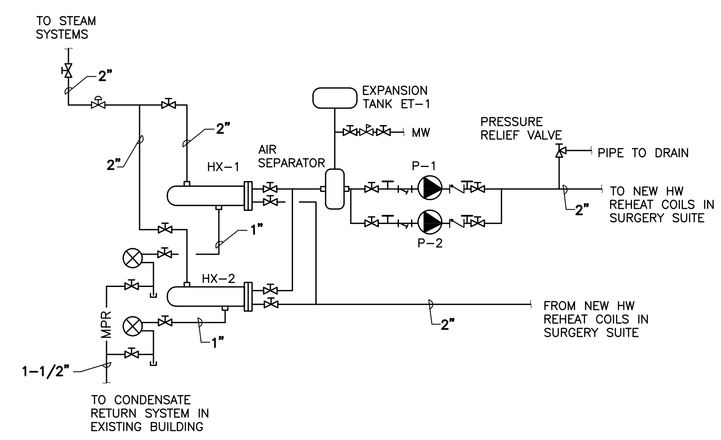

HEATING HOT WATER SYSTEM SCHEMATIC

SCALE: NONE

FULLY SPRINKLERED

Revisions	Date

VA FORM 08-6231

CONSULTANTS:

CIVIL/STRUCTURAL:

MARTIN/MARTIN
CONSULTING ENGINEERS
12499 West Colfax Avenue
P.O. Box 151500
Lakewood, Colorado 80215
303.431.6100
Fax 303.431.6866

MECHANICAL, PLUMBING, AND ELECTRICAL:

SSR Smith Seckman Reid, Inc.
8055 E. Tufts Avenue, Suite 1100
Denver, Colorado 80237
(303) 779-1222
FAX: (303) 694-9144
www.ssr-inc.com
SSR JOB #: 08270120

PLAN NORTH

SCALE: 1/8" = 1'-0"

ARCHITECT/ENGINEERS:

HEERY design

Heery International Inc.
820 16th Street Mall,
Suite 200,
Denver, CO 80202-3219
720.946.0276

Heery Project Number:
0830400

Drawing Title	HVAC SCHEMATICS
Approved: Project Director	
Project Title	SURGERY RENOVATION AND EXPANSION
Location	CHEYENNE, WY
Date	04/24/09
Checked	RDM
Drawn	ETK
Project Number	VA-259-09-RA-209
Building Number	BLDG. NO. 1
Drawing Number	MH602
Dwg. 15 of 44	

Office of Construction and Facilities Management

Department of Veterans Affairs