SHEET NOTES:

1. REFER TO ARCH SHEETS FOR DEMO PLANS
2. CONTRACTOR TO FIELD VERIFY ALL EXISTING CONDITIONS PRIOR TO ANY DEMO OR NEW CONSTRUCTION.

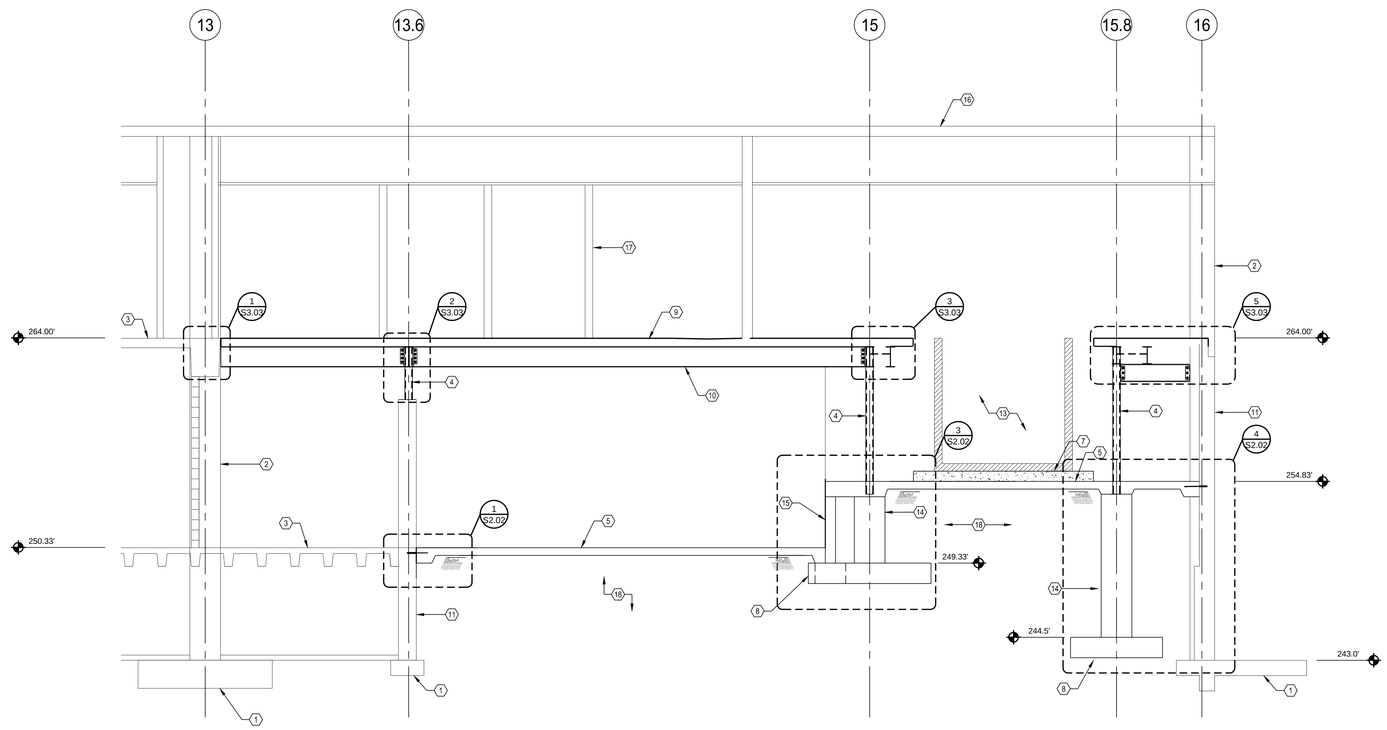

KEYED NOTES:

1. EXISTING FOOTING
2. EXISTING CONC COLUMN
3. EXISTING FLOOR
4. NEW HSS COLUMN
5. NEW 6" CONC SLAB
6. NOT USED
7. 8" CONC PAD
8. NEW PAD FTG
9. 6 1/2 " CONC SLAB ON 2" MTL DECK
10. NEW STL BEAM (TYP)
11. EXISTING CONC WALL
12. EXISTING CONC WALL TO BE REMOVED
13. HYDRO THERAPY POOL DESIGNED AND PROVIDED BY POOL SUPPLIER. SEE ARCH FOR EXACT SIZE AND LOCATION.
14. CONC PEDESTAL
15. NEW CONC WALL
16. EXISTING ROOF
17. NEW CMU WALL
18. COMPACTED FILL

1 FRAMING SECTION – STRUCTURAL:

SCALE: 1/4"=1'-0"

-5' 0 5' 10' 15'

Revisions:	Date

CONSULTANTS:

WITTENBERG, DELONY & DAVIDSON
ARCHITECTS
400 WEST CAPITOL AVE., LITTLE ROCK, AR 72201
(501) 376-6681

BERNHARD TME ENGINEERS
1 ALLIED DRIVE, SUITE 2600, LITTLE ROCK, AR 72202
(501) 666-6776

DAVID BRIDGES REGISTERED ENGINEER ARCHITECTURE No. 11973A STATE OF TENNESSEE 10/18/17

ARCHITECT/ENGINEERS:

JOHNSON DANFORTH & ASSOCIATES
2200 N. RODNEY PARHAM RD. SUITE 210, LITTLE ROCK, AR 72212
(501) 404-4481

Drawing Title: FRAMING SECTION - STRUCTURAL	Project Title: RENOVATE PHYSICAL MEDICINE AND REHABILITATION POOL AREA		Project Number: 614-16-112
			Building Number: -
Approved Project Director: - - VAPAHCS PLANNING AND ENGINEERING	Location: MEMPHIS TN		Drawing Number: S3.01
	Date: 10/18/17	Checked: DKB / Drawn: LEB	Dwg. 1 of 1

Office of Construction and Facilities Management

VA FORM 08-6231