SF-1 ENABLE/DISABLE

- SF-1 shall run whenever any zone is occupied or a definitive number of unoccupied zones need heating or cooling.
- SF-1 is disabled when the unit switch at the primary controller is turned off, or the system enable/disable point is commanded to 'Disable'
- During software shutdown (Disable) of SF-1, all fans shall stop, DX refrigeration cooling system shall stop, outside air damper shall shut, and return air damper shall open. Fans shall shut down even if in hand.

SF-1 HARDWARE SHUTDOWN

- Automatic hardware shutdown shall result from temperature low limit freezstat, duct smoke detectors, low static pressure, high static pressure, or fire alarm panel connection
- Provide a manual reset button to override and automatically startup and resume normal operation of SF-1

SF-1 AIR FLOW CONTROL

- Hardware protection shall prevent supply and return fans from ramping until damper positions are proven by end switches.
- Outside air damper shall open to provide minimum outside airflow any time the unit runs, and close any time the unit stops. The outside air damper will close 30 sec (adj.) after the supply fan stops.

COOLING COIL CONTROL

- The cooling coil shall be enabled whenever the outside air is above 60 degF (adj.). When the unit is shutdown, the cooling coil will be disabled. The cooling coil will cycle to maintain discharge air temperature of 55 ° F (adj.). Upon loss of airflow, the cooling coil will hold last calculated cooling load.

HEATING COIL CONTROL

- Heating coil valve shall open whenever the heating supply air temperature drops below 40degF. The heating valve will modulate to maintain temperature setpoint. The initial heating supply air temperature setpoint shall be 90 degF (adj.). As heating demand increases, the setpoint shall incrementally reset up to a maximum of 95 degF (adj.). As heating demand decreases, the setpoint shall incrementally reset down to a minimum of 80 degF (adj.)

SAFETIES

- Freeze Protection: the unit shall shut down and generate an alarm upon receiving a freezestat status.
- Smoke detection: the unit shall shut down and generate an alarm upon receiving a supply air smoke detector status.
- Return air pressure low: the return air fan shall shut down and generate an alarm upon receiving a low return air pressure.

HUMIDIFICATION CONTROL

- Humidification valve shall be enabled whenever %RH is below setpoint.

NIGHT SETBACK/NIGHT SETUP

- When in unoccupied mode, the unit will cycle as necessary to maintain the shared night setback zone temperature at setpoint. A differential shall prevent the unit from cycling excessively.

STATUS/MONITOR

- As per point chart

ALARMS

- High cooling supply air temp - if the cooling supply air temperature is 5 degF (adj.) greater than the setpoint.
- Supply fan failure - Commanded on but there is less and 0.25" WC (adj.) differential pressure across the fan.
- Supply fan in hand - commanded off, but there is greater than 0.15" WC (adj.) differential pressure across the fan.
- Return fan failure - Commanded on but there is less and 0.25" WC (adj.) differential pressure across the fan.
- Return fan in hand - commanded off, but there is greater than 0.15" WC (adj.) differential pressure across the fan.
- VFD fault
- Freezestat
- Smoke detection
- Low return air pressure

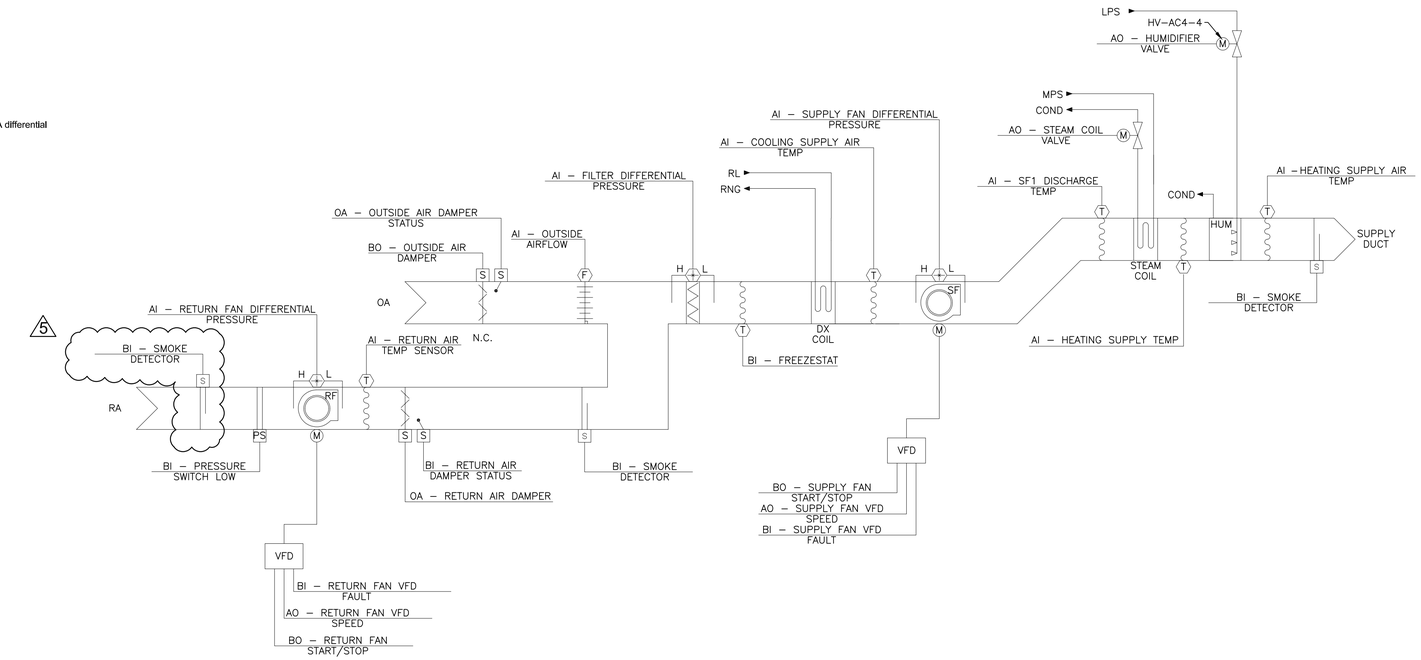

1 SF-1 CONTROL DIAGRAM

Scale: N.T.S

Revisions: 5 ADDENDUM 5	Date: 12/05/19

Office of Construction and Facilities Management

VA U.S. Department of Veterans Affairs

Drawing Title: SF-1 CONTROL DIAGRAM	Phase: BID DOCUMENTS	Project Title: BLDG 43 SF1 & SF2 HVAC REPLACEMENT	Project Number: 695-19-137
			Building Number: 43
Approved: Project Director: DLK	SPRINKLERED	Location: BLDG 43 A & B WING PENTHOUSES	Drawing Number: M-300
		Issue Date: 10/2/19 · Checked: MSO · Drawn: ASB	

6/14/2009 12:39:03 PM

File Path:

VA FORM 08 - 6231