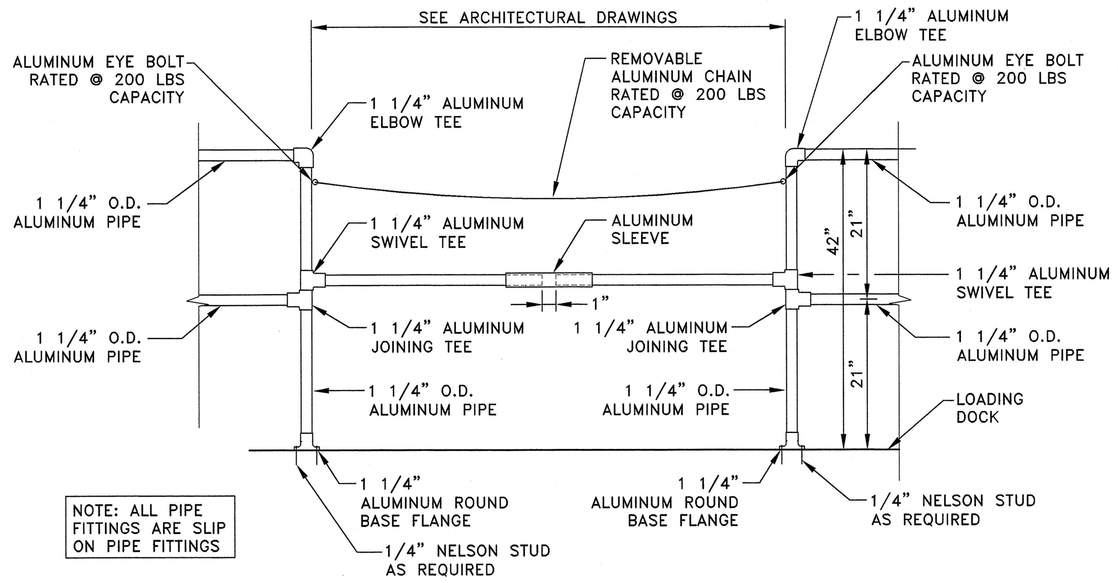

1/C2.2 GUARDRAIL ELEVATION
NOT TO SCALE

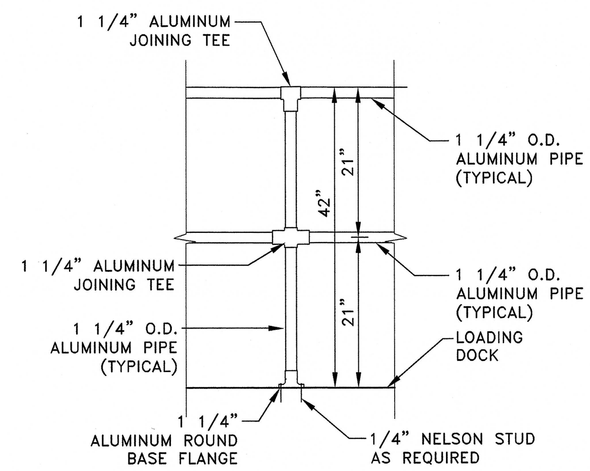

2/C2.2 GUARDRAIL ELEVATION (TYPICAL)
NOT TO SCALE

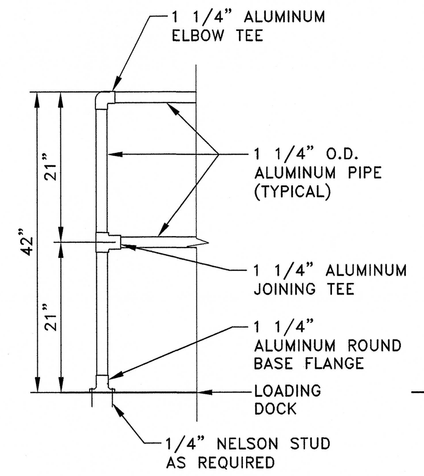

3/C2.2 GUARDRAIL ELEVATION (TYPICAL)
NOT TO SCALE

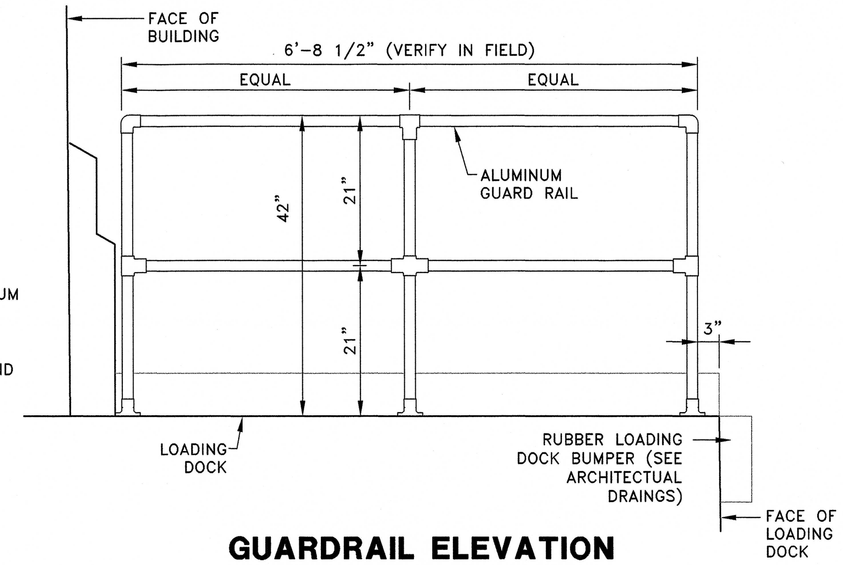

4/C2.2 GUARDRAIL ELEVATION AT LOADING DOCK
NOT TO SCALE

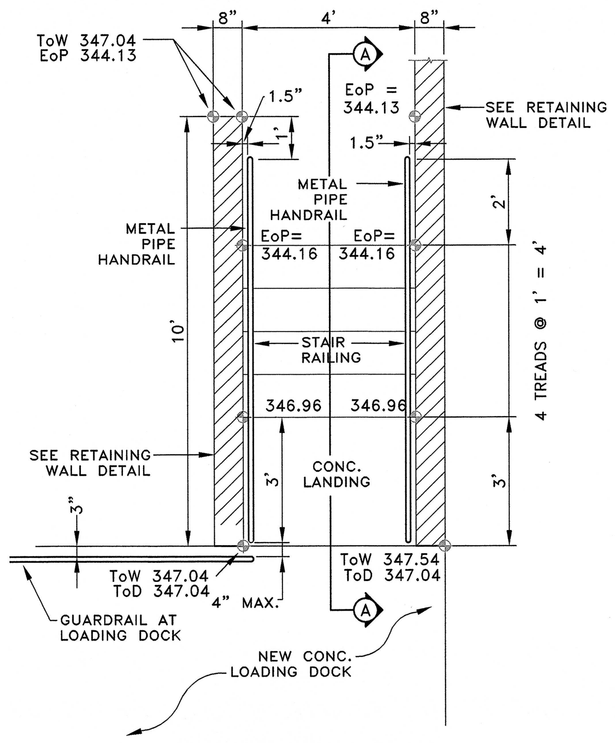

5/C2.2 ENLARGED PLAN STAIR AT LOADING DOCK
NOT TO SCALE

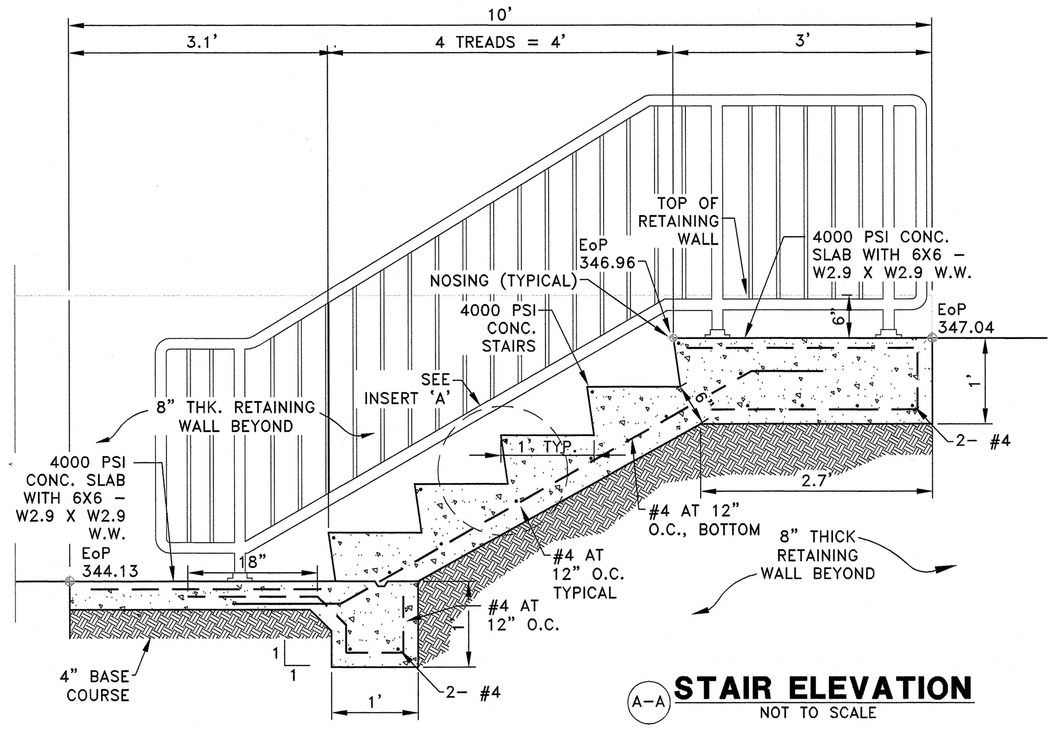

A-A STAIR ELEVATION
NOT TO SCALE

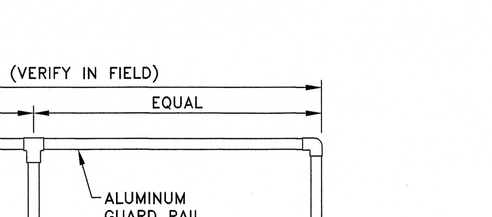

INSERT 'A'
NOT TO SCALE

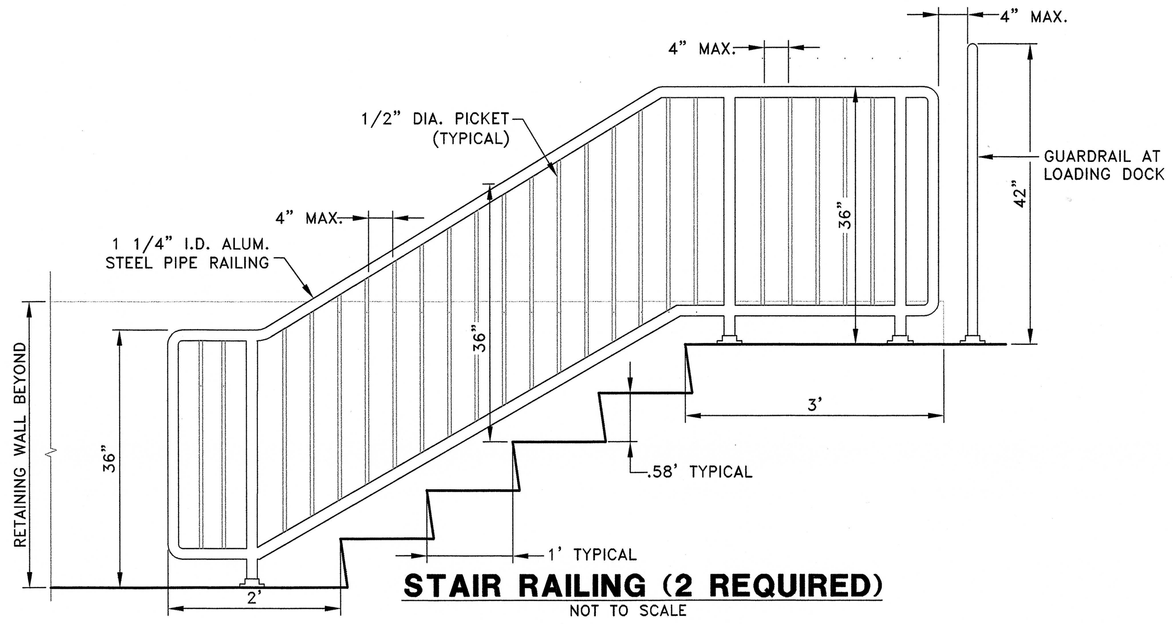

STAIR RAILING (2 REQUIRED)
NOT TO SCALE

SCALE: 3/4"=1'-0"
SCALE: 1/2"=1'-0"
SCALE: 1/4"=1'-0"
SCALE: 1/8"=1'-0"

PAUL J. POMPEO — NEW MEXICO — REGISTERED PROFESSIONAL ENGINEER

SOUTHWEST ENGINEERING INCORPORATED

K.F. DAVIS ENGINEERING, INC
530 LA GONDA WAY, SUITE E
DANVILLE, CA 94526

Revisions:	Drawing Title: SITE DETAILS		Project Title: TAMC E-WING LOADING DOCK EXPANSION
Approved:	Approved: Medical Center Director	Drawn: TB	Building Number: T1
Approved:	Approved: Chief, Engineering Service	Checked: PJP	Location: VAMROC, HONOLULU HAWAII

Date: 08/12/11
Project No.: 459-11-109
DRAWING No. C2.2
Dwg. Of

Department of Veterans Affairs

11051DMSA