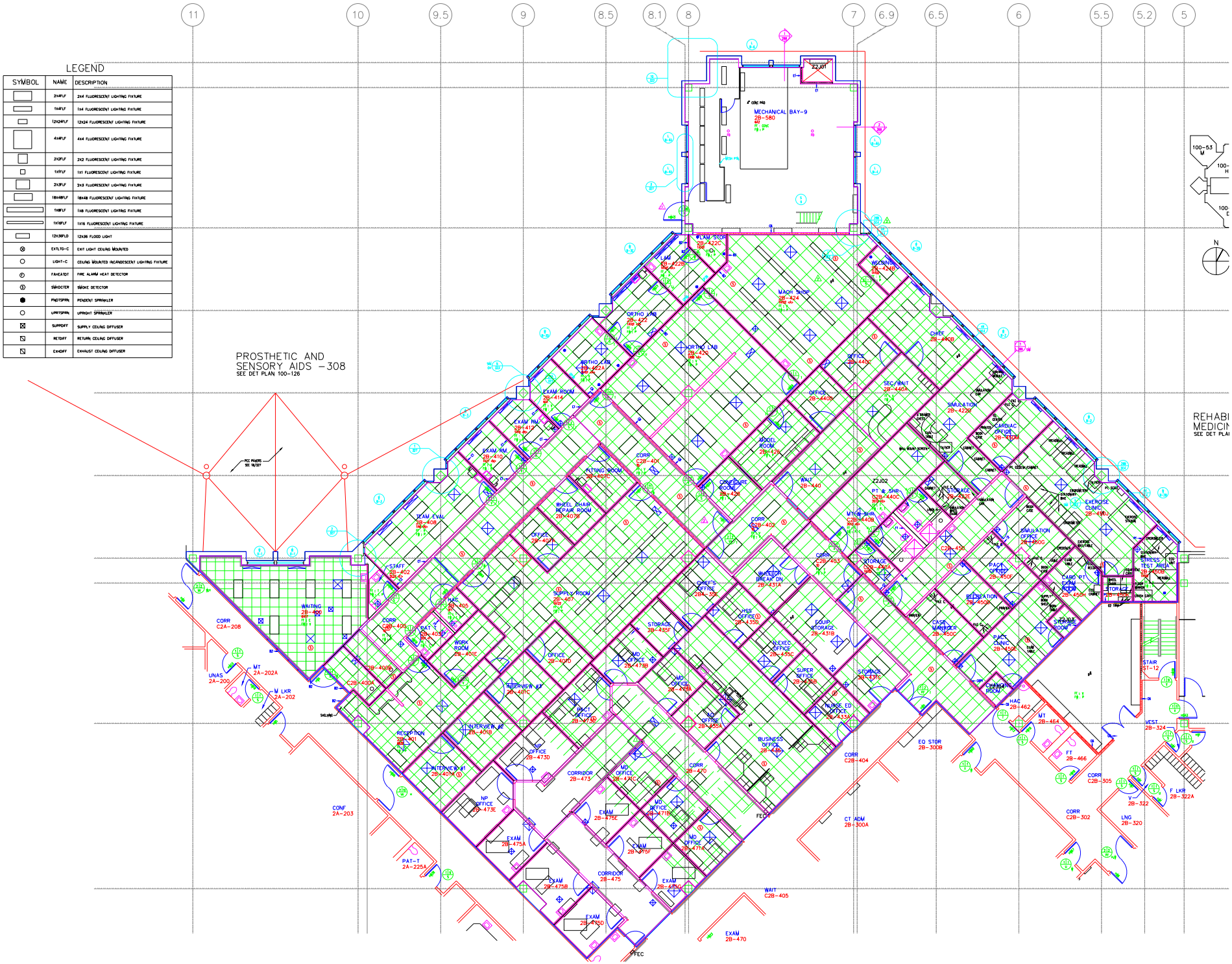
LEGEND
SYMBOL | NAME | DESCRIPTION
2X4FLF | 2x4 FLUORESCENT LIGHTING FIXTURE
1X4FLF | 1x4 FLUORESCENT LIGHTING FIXTURE
12X24FLF | 12x24 FLUORESCENT LIGHTING FIXTURE
4X4FLF | 4x4 FLUORESCENT LIGHTING FIXTURE
2X2FLF | 2x2 FLUORESCENT LIGHTING FIXTURE
1X1FLF | 1x1 FLUORESCENT LIGHTING FIXTURE
2X3FLF | 2x3 FLUORESCENT LIGHTING FIXTURE
18X48FLF | 18x48 FLUORESCENT LIGHTING FIXTURE
1X8FLF | 1x8 FLUORESCENT LIGHTING FIXTURE
1X16FLF | 1x16 FLUORESCENT LIGHTING FIXTURE
12X36FLD | 12x36 FLOOD LIGHT
EXTLTG-C | EXIT LIGHT CEILING MOUNTED
LIGHT-C | CEILING MOUNTED INCANDESCENT LIGHTING FIXTURE
FAHEATDT | FIRE ALARM HEAT DETECTOR
SMKDCTER | SMOKE DETECTOR
PNDTSPRN | PENDENT SPRINKLER
UPRTSPRN | UPRIGHT SPRINKLER
SUPPDIFF | SUPPLY CEILING DIFFUSER
RETDIFF | RETURN CEILING DIFFUSER
EXHDIFF | EXHAUST CEILING DIFFUSER
PROSTHETIC AND SENSORY AIDS – 308
SEE DET PLAN 100-126
MECHANICAL BAY-9
2B-580
REHABI
MEDICIN
SEE DET PLAN
11
10
9.5
9
8.5
8.1
8
7
6.9
6.5
6
5.5
5.2
5

POWER LEGEND

SYMBOL	NAME	DESCRIPTION
	JBOX-C	CEILING MOUNTED JUNCTION BOX
	JBOX-W	WALL MOUNTED JUNCTION BOX
	POLRCP	POLARIZED RECEPTACLE
	POLRCP-A	POLARIZED RECEPTACLE
	POLRCP-B	POLARIZED RECEPTACLE
	POLRCP-C	POLARIZED RECEPTACLE
	POLRCP-D	POLARIZED RECEPTACLE
	POLRCP-E	POLARIZED RECEPTACLE
	POLRCP-F	POLARIZED RECEPTACLE
	POLRCP-G	POLARIZED RECEPTACLE
	POLRCP-H	POLARIZED RECEPTACLE
	POLRCP-L	POLARIZED RECEPTACLE
	POLRCP-M	POLARIZED RECEPTACLE
	POLRCP-N	POLARIZED RECEPTACLE
	POLRCP-P	POLARIZED RECEPTACLE
	POLRCP-Q	POLARIZED RECEPTACLE
	POLRCP-R	POLARIZED RECEPTACLE
	POLRCP-T	POLARIZED RECEPTACLE
	POLRCP-T	POLARIZED RECEPTACLE
	POLRCP-U	POLARIZED RECEPTACLE
	POLRCP-V	POLARIZED RECEPTACLE
	POLRCP-W	POLARIZED RECEPTACLE
	FLOOR-1	FLOOR OUTLET, 20A, 125V
	GFCI/P-A	125V, 20A GFI RECEPTACLE MOUNT
	GFCI/P-W	125V, 20A GFI WEATHERPROOF RECEPTACLE 18" A.F.F.
	FRP/RCP1	FOURPLEX (WALL RECEPTACLE-20A, 125V, 18" A.F.F.)
	SNGL/RCP1	SINGLE RECEPTACLE - 20A, 125V, 18" A.F.F.
	DUPLEX	DUPLEX RECEPTACLE
	SPLCD/A-1	SPECIAL RECEPTACLE, MOUNTING HEIGHT TO SUIT EQUIPMENT
	DUPLEX/A	120 DUPLEX RECEPTACLE
	GUARD/RCP	GUARDPLEX RECEPTACLE (CONTINUAL GRAND) 20A, 125V, 18" AFF BETW. 12" LOW
	EQUIP	ELECTRICAL EQUIPMENT
	DIGCLK-W (WALL)	DIGITAL CLOCK (WALL)
	DIGCLK-C (CEILING)	DIGITAL CLOCK (CEILING)
	MOTOR	MOTOR
	GENERATOR	GENERATOR
	PULLBOX	PULL BOX
	MANUAL MOTOR STARTING SWITCH (W/ THERMAL OVERLOAD)	
	PUSH-BUTTON	PUSH BUTTON
	INCANDESCENT OR HID FIXTURE	
	INCANDESCENT OR HID FIXTURE-(WALL MOUNTED)	
	1 POLE SINGLE SWITCH	
	CEILING MICROPHONE SPEAKER	
	CARBON CONTROL	

SYMBOL	NAME	DESCRIPTION
	DISCONNECT	DISCONNECT SWITCH
	COMBINATION	COMBINATION DISCONNECT SWITCH AND MAGNETIC STARTER
	UNITHTR	UNIT HEATER BLOWER MOTOR
	PANEL	LIGHTING OR LIGHTING/POWER PANEL BOARD
	GROUND	GROUND BARE
	NEUTRAL	NEUTRAL BARE
	HOMERUN	HOMERUN
	CONDUIT-UP	CONDUIT UP
	CONDUIT-DN	CONDUIT DN
	DUPLCD	CEILING MOUNTED RECEPTACLE
	VOLTMETER	VOLT METER
	CONNECTION	CONNECTION TO EQUIPMENT
	THEATRE-T	OUTLET FOR TV CAMERA (CCTV SYSTEM) (WALL MTD)
	THEATRE-V	OUTLET FOR TV MONITOR (CCTV SYSTEM)
	TVBSA-N	TV/BSA SPACE ANTENNA OUTLET BOX
	TVOUT-C	OUTLET FOR TV CAMERA (CEILING)
	TVOUT-C	OUTLET FOR TV MONITOR (CEILING)
	TVBSA-C	TV/BSA SPACE ANTENNA OUTLET BOX (CEILING)
	RTCOUT-W	REMOTE TV CONTROL OUTLET (WALL)
	RTCOUT-C	REMOTE TV CONTROL OUTLET (CEILING)
	CATV/BSA	CATV/BSA
	TIMECLOCK	TIME CLOCK
	LITECNTR	LIGHTING CONTRACTOR
	LVRCTRLT	LV. TRACER CONTROL UNIT
	LOWVOLT	LOW VOLTAGE RELAY
	AUTODOOR	AUTOMATIC DOOR PUSH PLATE
	ELECDOOR	ELECTRIC DOOR OPERATOR PUSH PLATE ACTUATOR
	DOOR/SW	DOOR OPERATOR BUTTON SELECTOR
	GROUNDJACK	GROUND JACK
	HOSPPNL	HOSPITAL GRADE RECEPTACLE
	MEDPNL	MEDICAL RECEPTACLE PANEL
	EQUIJACK	EQUIPOTENTIAL GROUNDING JACK
	DRYTHRMT	DRY, THRMT, THERMOMETER
	DUCTHTR	DUCT HEATER
	BUSDUCT	BUS DUCT, MUTER
	VACUUM	VACUUM OPERATED CIRCUIT BREAKER IN MEDICAL ENCLOSURE
	TRANSFORMER	TRANSFORMER
	TELOUT/1	TELEPHONE, FLOOR OUTLET
	TELCLOCK	CLOCK OUTLET-(WALL MOUNTED)
	CIRBRK	CIRCUIT BREAKER
	AUTOCNTR	AUTOMATIC CONTROLLER
	RELAY	RELAY LIGHT
	MOTION	MOTION SENSOR

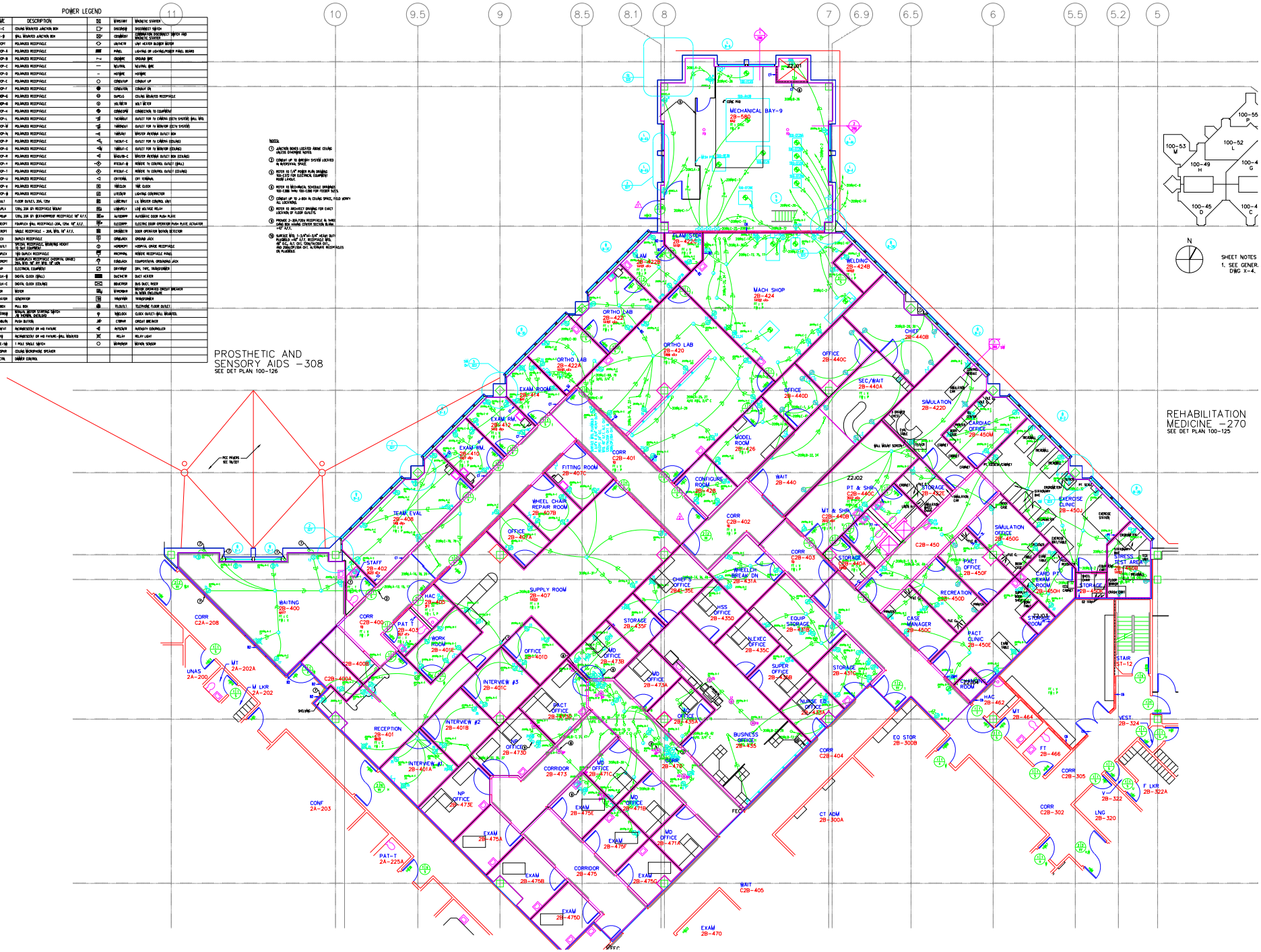

PLUMBING LEGEND

SYMBOL	NAME	DESCRIPTION	SYMBOL	NAME	DESCRIPTION
	SAN	SANITARY DRAIN BELOW FLOOR		FCOUT	FLOOR CLEAN OUT
	SAN	SANITARY DRAIN ABOVE FLOOR		CLOTPLUG	CLEANOUT PLUG
	C/W	COLD WATER		OSHYVLV	OUTSIDE SCREW & YOKE VALVE
	H/W	HOT WATER		CAPS	PIPE CAP
	H/WR	HOT WATER RETURN		ELBOW-D	ELBOW-D
	V	SANITARY VENT		ELBOW-RD	ELBOW-RD
F	FIRE	FIRE STAND PIPE		TEE-RUN	TEE-RUN
FS	SPR	FIRE SPRINKLER		TELBOWDN	TELBOW DOWN
GR	G/W	KITCHEN GREASE WASTE		ELBOW	ELBOW
SD	SD	STORM DRAIN PIPE		TELBOWUP	TELBOW UP
OD	OD	OVERFLOW DRAIN PIPE		ELBOWDN	ELBOW DOWN
CRP	CRP	CHEMICAL RESISTANT DRAIN		RISER	RISER
CRP	CRP	CHEMICAL RESISTANT VENT		DROP	DROP
S	SCW	SOFTENED COLD WATER		GATEVALVE	GATE VALVE
DI	DI	DEIONIZED WATER SUPPLY		HUBDRAIN	HUB DRAIN
DIR	DIR	DEIONIZED WATER RETURN		VTR	VENT THRU ROOF
ATV	ATV	ATMOSPHERIC VENT		PREGVLV	PRESSURE REGULATING VALVE (PRV) U.N.O.
FOS	FOS	FUEL OIL SUPPLY		GLOBEVLV	GLOBE VALVE
FOR	FOR	FUEL OIL RETURN		PEDUP	PLUMBING EQUIPMENT BOX
FOV	FOV	FUEL OIL VENT		PLUMRADD	PLUMBING STACK
SR	SR	SILVER RECOVERY		FIRERADD	FIRE STAND PIPE RISER
DW	D/W	DISTILLED WATER		FDS	FIRE DEPT SIAMESE
	VTR	VENT THRU ROOF		OFDRAIN	OVERFLOW DRAIN
	HD	HUB DRAIN		FCO	FLUSH CLEAN OUT
	SP	SUMP PUMP		DOWNRADD	STORM DOWN SPOUT
	SE	SEWAGE EJECTOR		CRPRISMHD	CHEMICAL RESISTANT DRAIN RISER NO
	W	WASTE PIPE			FOR EQUIPMENT NUMBERS SHOWN IN HEXAGON
	DWH	DOMESTIC WATER HEATER			PIPE LEVEL DESIGNATION
	FHV	FIRE HOSE VALVE		FLOWREG	FLOW REGULATOR VALVE
	FHC	FIRE HOSE CABINET		BFPREVNT	BACK FLOW PREVENTER
	SZCV	SPRINKLER ZONE CONTROL VALVE		ISOVALVE	ISOLATION VALVE - GATE, PLUG OR BUTTERFLY TYPE
	RFDRAIN	ROOF DRAIN		SHUTOFVV	SHUT OFF VALVE
	FLDDRAIN	FLOOR DRAIN		TRPRIMER	TRAP PRIMER
	CHECKVLV	CHECK VALVE		BALLVLV	BALANCING VALVE

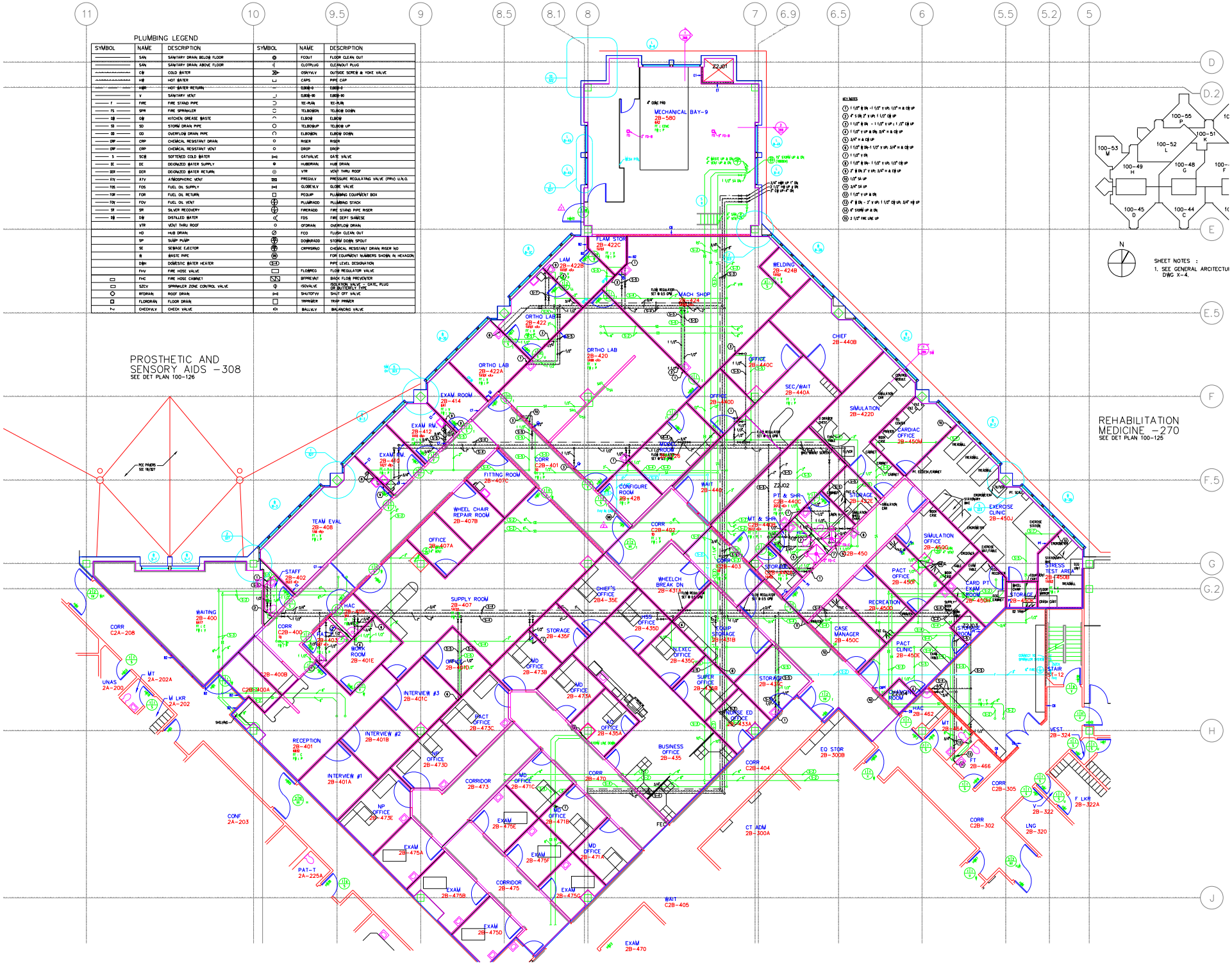

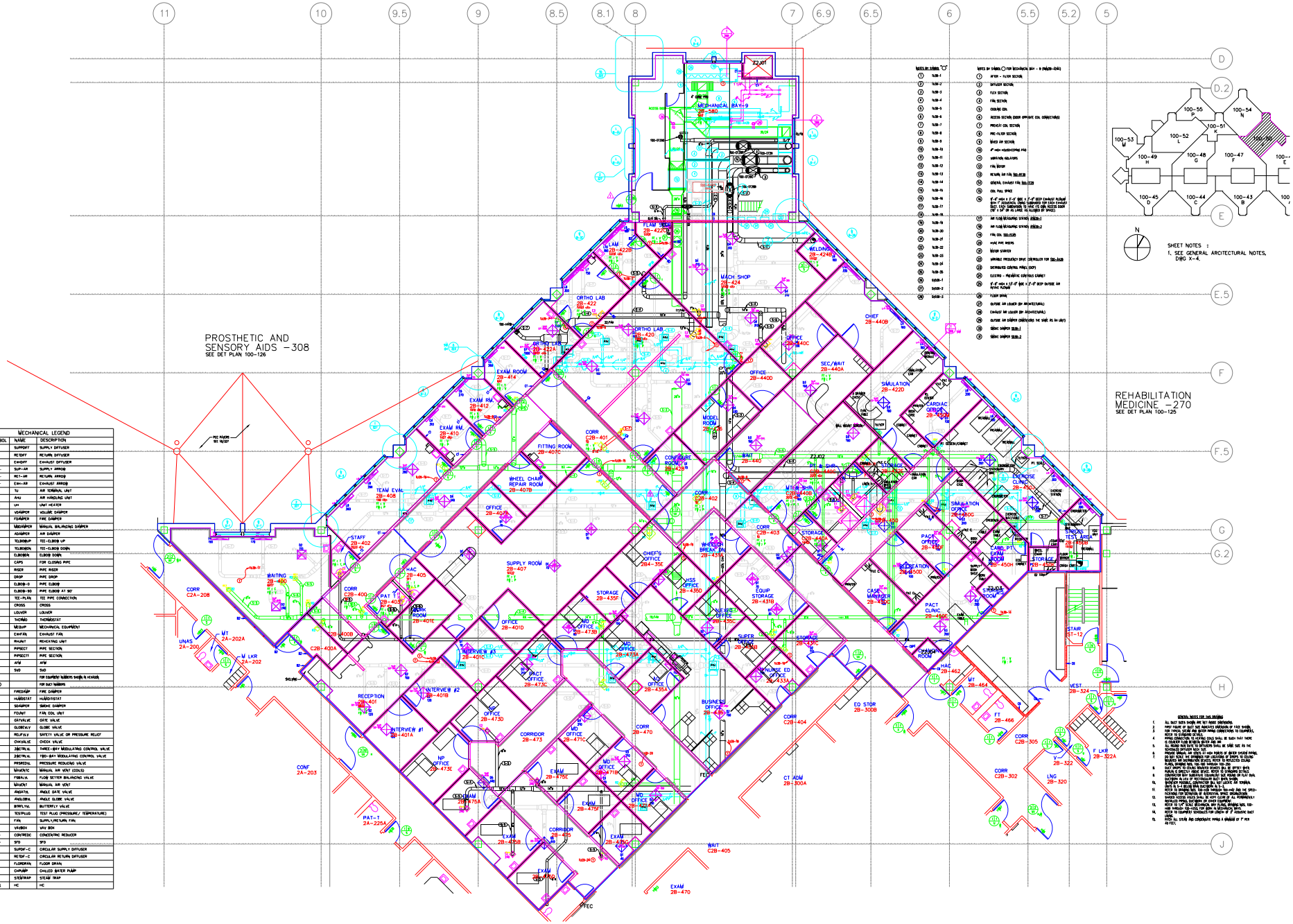
PROSTHETIC AND SENSORY AIDS –308
SEE DET PLAN 100-126
REHABILITATION MEDICINE –270
SEE DET PLAN 100-125
MECHANICAL BAY-9
SHEET NOTES :
1. SEE GENERAL ARCITECTURAL NOTES, DWG X-4.
MECHANICAL LEGEND
SYMBOL NAME DESCRIPTION
SUPPDIF SUPPLY DIFFUSER
RETDIF RETURN DIFFUSER
EXHDIF EXHAUST DIFFUSER
SUP-AIR SUPPLY AIRDQ
RET-AIR RETURN AIRDQ
EXH-AIR EXHAUST AIRDQ
TU AIR TERMINAL UNIT
AHU AIR HANDLING UNIT
UH UNIT HEATER
VDAMPER VOLUME DAMPER
FDAMPER FIRE DAMPER
MDAMPER MANUAL BALANCING DAMPER
ADAMPER AIR DAMPER
TEUBDUP TEE-ELBOW UP
TEUBDWN TEE-ELBOW DOWN
ELBOWDN ELBOW DOWN
CAPS FOR CLOSING PIPE
RISER PIPE RISER
DROP PIPE DROP
ELBOW-D PIPE ELBOW
ELBOW-90 PIPE ELBOW AT 90°
TEE-PLAIN TEE PIPE CONNECTION
CROSS CROSS
LOUVER LOUVER
THERMO THERMOSTAT
MEQUIP MECHANICAL EQUIPMENT
EXHFAN EXHAUST FAN
RHUNIT REHEATING UNIT
PIPSECT PIPE SECTION
PIPSECT PIPE SECTION
ATM ATM
SVD SVD
FOR DAMPER NUMBERS SHOWN IN HEXAGON
FOR DUCT NUMBERS
FIRDAMP FIRE DAMPER
HUMDSTAT HUMIDISTAT
SDAMPER SMOKE DAMPER
FCUNIT FAN COIL UNIT
GATEVALVE GATE VALVE
GLOBEVLV GLOBE VALVE
RELIEFVLV SAFETY VALVE OR PRESSURE RELIEF
CHKVALVE CHECK VALVE
3BCTRLVL THREE-WAY MODULATING CONTROL VALVE
2BCTRLVL TWO-WAY MODULATING CONTROL VALVE
PRSREDVL PRESSURE REDUCING VALVE
MANVENC MANUAL AIR VENT (COILS)
FSBVLVL FLOW SETTER BALANCING VALVE
MANVNT MANUAL AIR VENT
ANGATVL ANGLE GATE VALVE
ANGLGBVL ANGLE GLOBE VALVE
BWFLVVL BUTTERFLY VALVE
TESTPLUG TEST PLUG (PRESSURE/ TEMPERATURE)
FAN SUPPLY/RETURN FAN
VAVBOX VAV BOX
CONTREDC CONCENTRIC REDUCER
SFD SFD
SUPDF-C CIRCULAR SUPPLY DIFFUSER
RETDF-C CIRCULAR RETURN DIFFUSER
FLDRDRAIN FLOOR DRAIN
CHWAPP CHILLED WATER PUMP
STEMTRAP STEAM TRAP
HC HC

PROSTHETIC AND SENSORY AIDS -308
SEE DET PLAN 100-126
REHABILITATION MEDICINE -270
SEE DET PLAN 100-125
MECHANICAL BAY-9
2B-580
SHEET NOTES :
1. SEE GENERAL ARCHITECTURAL NOTES, DWG X-4.
LIGHTING LEGEND
SYMBOL
NAME
DESCRIPTION

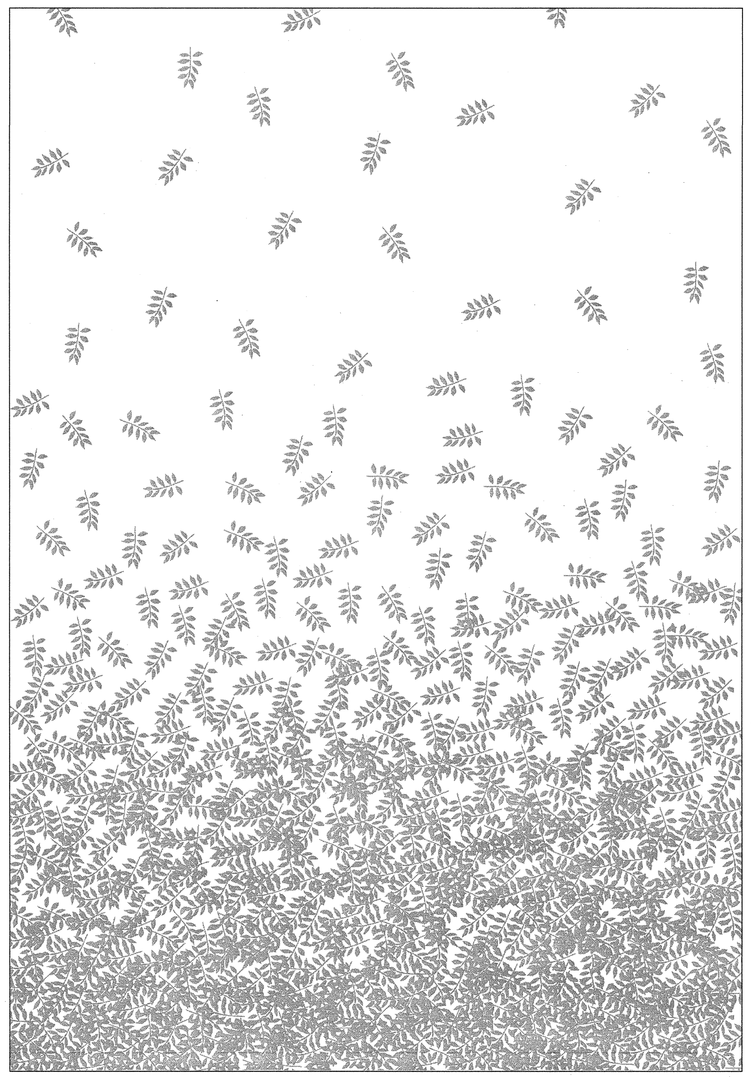

F1 GLASS PATTERN
NOT TO SCALE

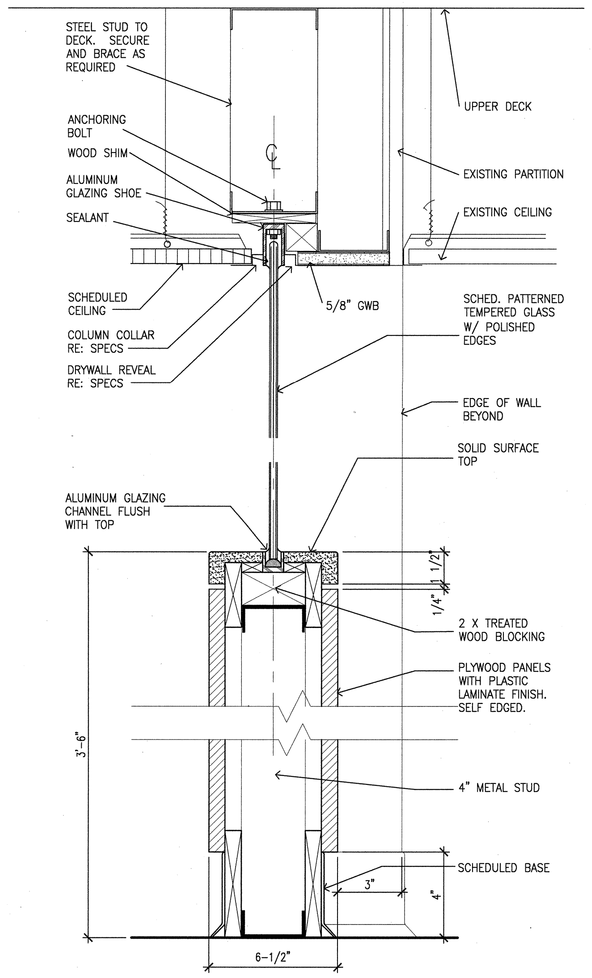

D4 CORRIDOR PARTITION AT WAITING
3"=1'-0"

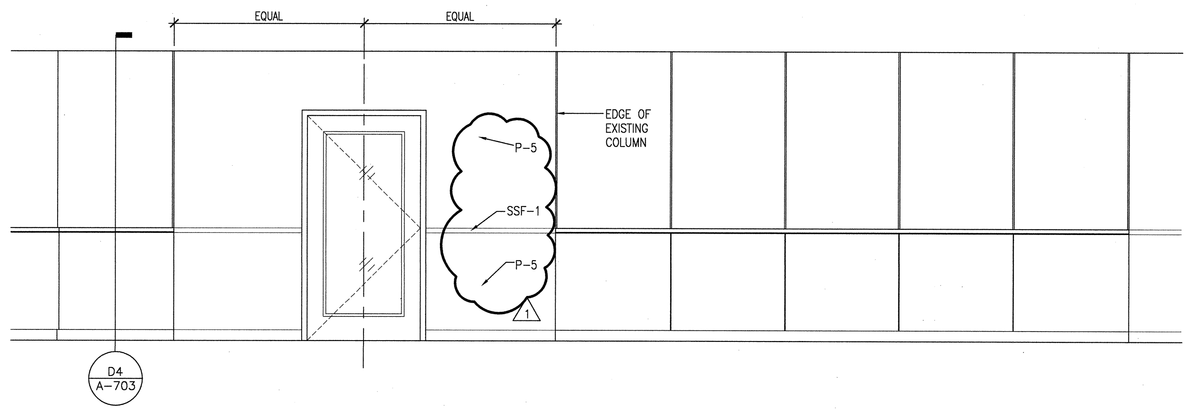

C5 CORRIDOR
3/8" = 1'-0"

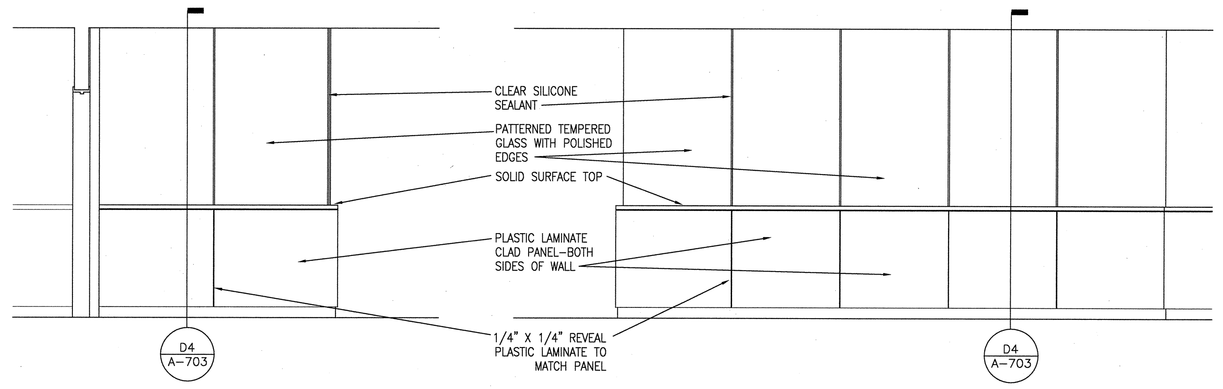

D5 CORRIDOR
3/8" = 1'-0"

D6 CORRIDOR
3/8" = 1'-0"

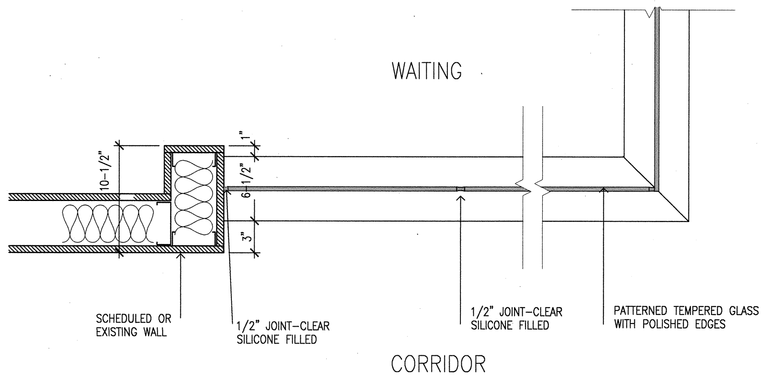

F5 DETAIL
1 1/2" = 1'-0"

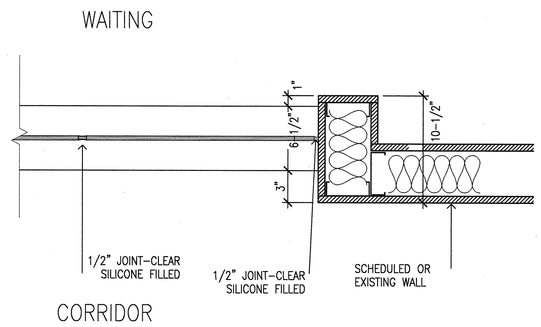

F8 DETAIL
1 1/2" = 1'-0"

F4 PARTIAL HEIGHT PARTITION
3"=1'-0"

Revisions:	Date
ADDENDUM NO. 1	08/11/2009
ISSUE FOR BID	08/03/2009

REGISTERED ARCHITECT STEVE A. CANO STATE OF TEXAS

CONSULTANTS:

Garner·Fritsche ENGINEERING, INC.

HDR
1801 Main Street, Houston TX 77002

ARCHITECT/ENGINEERS:

PROJECT PRINCIPAL	Maurice Robison	ELECTRICAL ENGINEER	Matt Thrasher
PROJECT MANAGER	Bryan Jones	INTERIOR DESIGNER	Stephen Lawlis
PROJECT DESIGNER	Tom Braud	EQUIPMENT PLANNER	-
PROJECT ARCHITECT	Steve Cano		
LANDSCAPE ARCHITECT	-		
CIVIL ENGINEER	-		
STRUCTURAL ENGINEER	-		
MECHANICAL ENGINEER	Matt Thrasher		

Drawing Title: INTERIOR ELEVATIONS / MISC. DETAILS

Approved : Project Manager

Approved : Service Chief

Project Title: Consolidate Diagnostic Service & Expand Eye Clinic

Date: 08/03/2009 | Checked: Checker | Drawn: B Skovdal

Location: 2002 Holcombe Blvd. / Houston, Texas 77030

Building Number: 54

Project No.: VA 580-311 HDR 202067-05677

Drawing Number: A-703

VAMC, HOUSTON

VA FORM 08-6231

C:\rvt\95677-A-Brunok-2-09.rvt
6/5/2009 11:00:18 AM

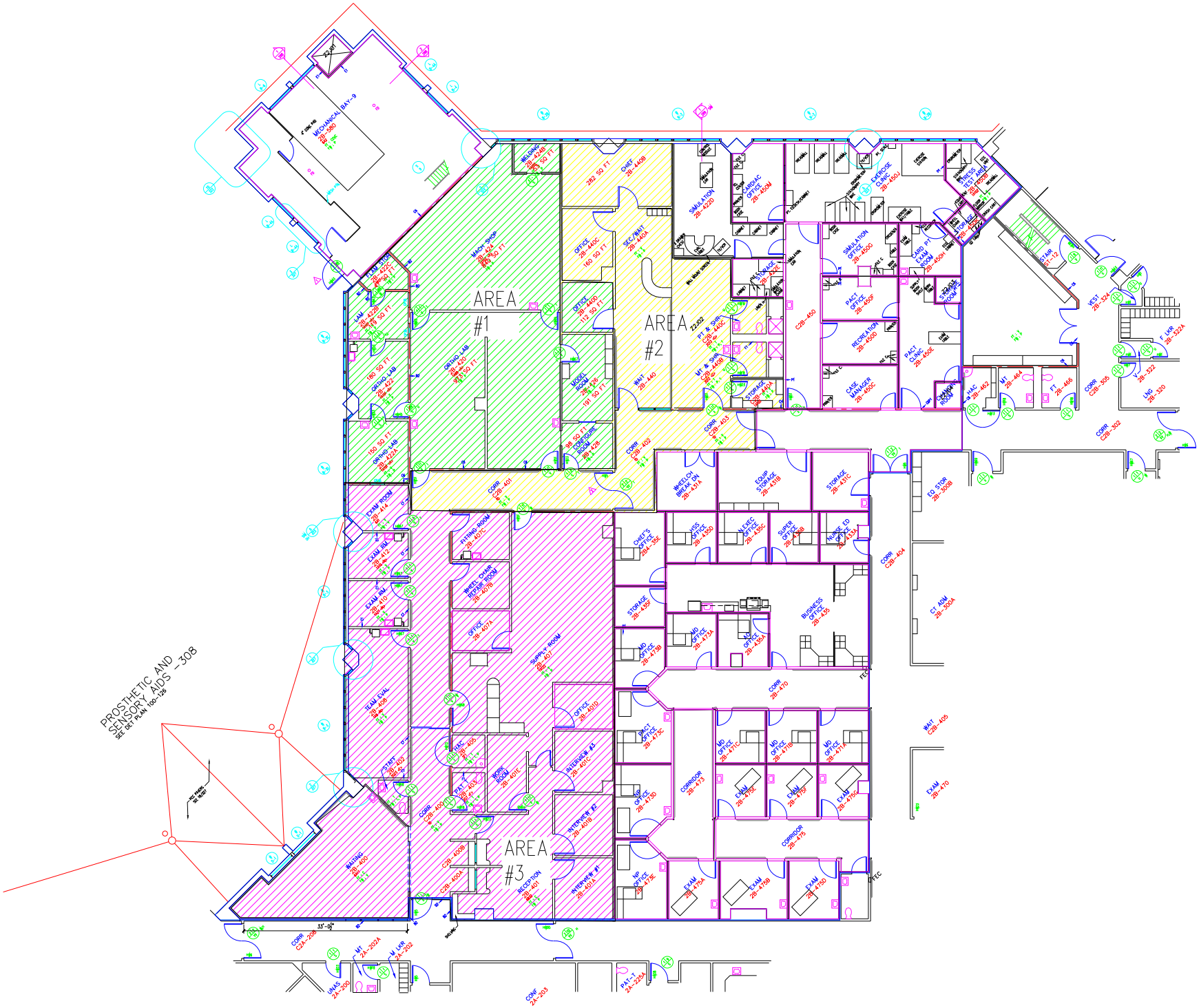
AREA #1
AREA #2
AREA #3
PROSTHETIC AND SENSORY AIDS - 308
SEE DET PLAN 100-126
MECHANICAL BAY-9
WELDING
CHIEF
SIMULATION
CARDIAC OFFICE
EXERCISE CLINIC
STRESS TEST AREA
MACH SHOP
OFFICE
SEC/WAIT
STORAGE
SIMULATION OFFICE
CARD PT EXAM ROOM
STAIR
VEST
F LKR
LNG
CORR
CHANGING ROOM
HAC
MT
FT
CASE MANAGER
PACT CLINIC
RECREATION
PACT OFFICE
C2B-450
ORTHO LAB
MODEL ROOM
WAIT
CONFIGURE ROOM
CORR
WHEELCH BREAK DN
EQUIP STORAGE
STORAGE
EQ STOR
EXAM ROOM
FITTING ROOM
WHEEL CHAIR REPAIR ROOM
OFFICE
SUPPLY ROOM
CHIEF'S OFFICE
HISS OFFICE
N.EXEC OFFICE
SUPER OFFICE
NURSE ED OFFICE
CORR
CT ADM
BUSINESS OFFICE
MD OFFICE
CORR
WAIT
EXAM
CORRIDOR
EXAM
EXAM
EXAM
EXAM
EXAM
CORRIDOR
WAITING
RECEPTION
INTERVIEW #1
INTERVIEW #2
INTERVIEW #3
WORK ROOM
HAC
PAT-T
CORR
MT
M LKR
UNAS
CONF
33'-0"