CABINET PS-1

CABLE FROM			TERMINATION POINT	
LABEL	JACKET	CONDUCTOR	SIGNAL TYPE	PUNCH BLOCK
NM-1	BRW	RED	+30v	BLOCK A, PIN 50C
NM-1	BRW	BLK	PCOM	BLOCK A, PIN 46C
NM-1	BRW	WHT/ORN	RDO+	BLOCK A, PIN 1D
NM-1	BRW	ORN/WHT	RDO-	BLOCK A, PIN 2D
NM-1	BRW	WHT/BLU	PDO+	BLOCK A, PIN 3D
NM-1	BRW	BLU/WHT	PDO-	BLOCK A, PIN 4D
NM-1	BRW	GRN/WHT	ZONE	BLOCK A, PIN 6D
NM-1	WHT	BLU/WHT	EAR+	BLOCK A, PIN 10D
NM-1	WHT	WHT/BLU	EAR-	BLOCK A, PIN 11D
NM-1	WHT	ORN/WHT	MIC+	BLOCK A, PIN 8D
NM-1	WHT	WHT/ORN	MIC-	BLOCK A, PIN 9D
PS1-1	BRW	RED	+30v	BLOCK A, PIN 50A
PS1-1	BRW	BLK	PCOM	BLOCK A, PIN 46A
PS1-1	BRW	WHT/ORN	RDO+	BLOCK A, PIN 1A
PS1-1	BRW	ORN/WHT	RDO-	BLOCK A, PIN 2A
PS1-1	BRW	WHT/BLU	PDO+	BLOCK A, PIN 3A
PS1-1	BRW	BLU/WHT	PDO-	BLOCK A, PIN 4A
PS1-1	BRW	GRN/WHT	ZONE	BLOCK A, PIN 6A
PS1-1	WHT	BLU/WHT	PSPK+	BLOCK A, PIN 12A
PS1-1	WHT	WHT/BLU	PSPK-	BLOCK A, PIN13A
PS1-1	WHT	ORN/WHT	PMIC+	BLOCKA, PIN 14A
PS1-1	WHT	WHT/ORN	PMIC-	BLOCK A, PIN 15A
PS1-2	BRW	RED	+30v	BLOCK A, PIN 49A
PS1-2	BRW	BLK	PCOM	BLOCK A, PIN 45A
PS1-2	BRW	WHT/ORN	RDO+	BLOCK A, PIN 1B
PS1-2	BRW	ORN/WHT	RDO-	BLOCK A, PIN 2B
PS1-2	BRW	WHT/BLU	PDO+	BLOCK A, PIN 3B
PS1-2	BRW	BLU/WHT	PDO-	BLOCK A, PIN 4B
PS1-2	BRW	GRN/WHT	ZONE	BLOCK A, PIN 6B
PS1-2	WHT	BLU/WHT	PSPK+	BLOCK A, PIN 12B
PS1-2	WHT	WHT/BLU	PSPK-	BLOCK A, PIN 13B
PS1-2	WHT	ORN/WHT	PMIC+	BLOCK A, PIN 14B
PS1-2	WHT	WHT/ORN	PMIC-	BLOCK A, PIN 15B

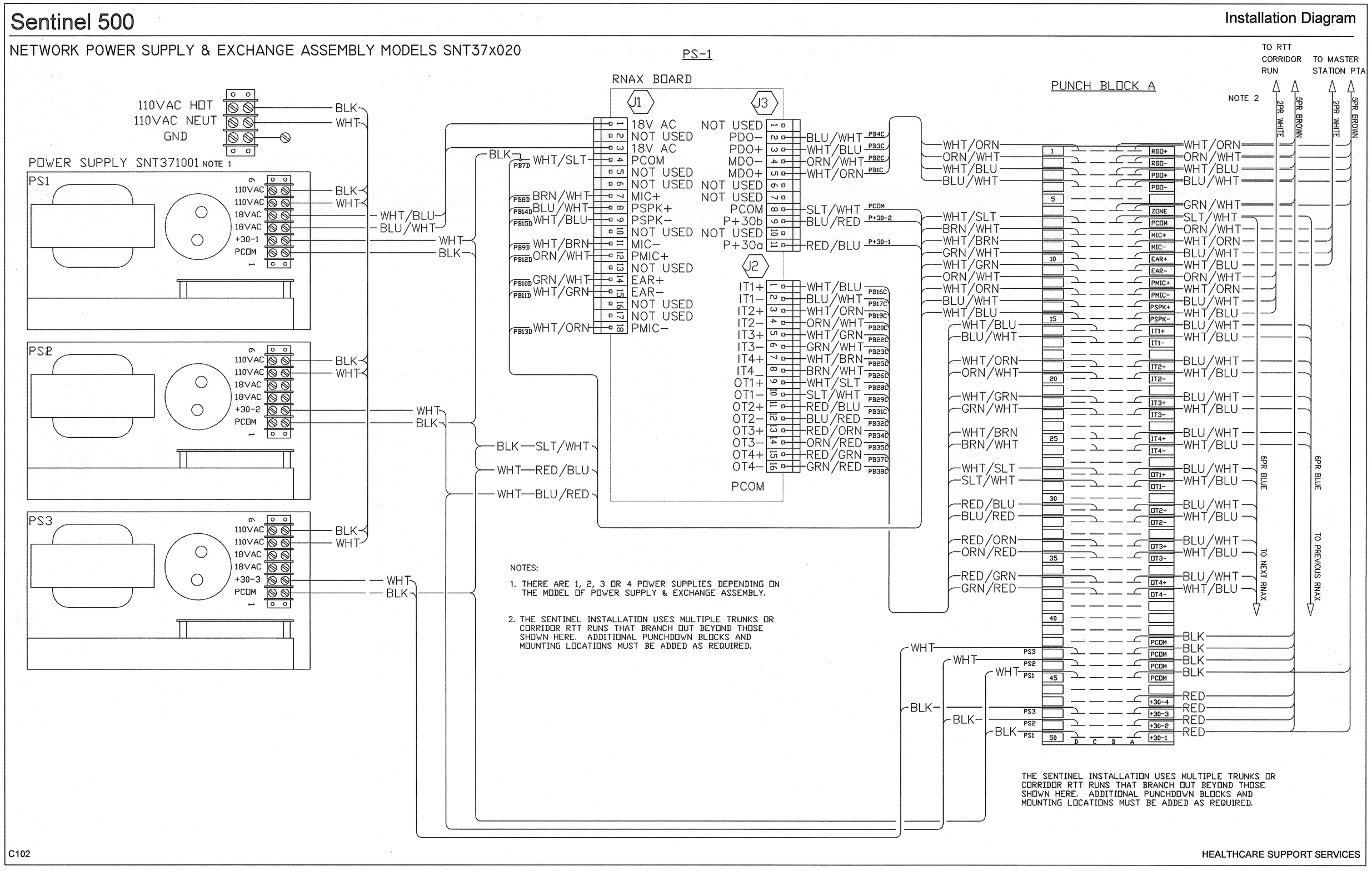

TYPICAL POWER SUPPLY

NO.	DATE	REVISION DESCRIPTION
A	02/21/08	RECORD DRAWINGS (BDC)
B	01/28/09	RECORD DRAWINGS (MDP)
C	04/03/09	RENUMBER DRAWINGS AND ADD NC1.06 (MDP)
D	06/05/09	RECORD DRAWINGS (PW)
E	02/10/10	RECORD DRAWING PER FEBRUARY COMMENTS (GLS)

tyco / Fire & Security / SimplexGrinnell

6340 SMITH ROAD
DENVER, COLORADO 80216
SALES: (303) 355-0500
SERVICE: (303) 355-0600
FAX: (303) 355-0815

©2001 TYCO INTERNATIONAL LP ALL RIGHTS RESERVED

NURSE CALL SYSTEM FOR:
VAMC – GRAND JUNCTION, COLORADO

NURSE CALL REPLACEMENT AND UPGRADES

2121 NORTH AVE.
GRAND JUNCTION, COLORADO 81501

DRAWN BY: KO	DATE: 04/25/04
DESIGNED BY:	DATE:
APPROVED BY:	DATE:
PROJECT #: 847597001	
SCALE: NTS	
SHEET TITLE: POWER SUPPLY PLAN	
SHEET NUMBER: NC1.04	