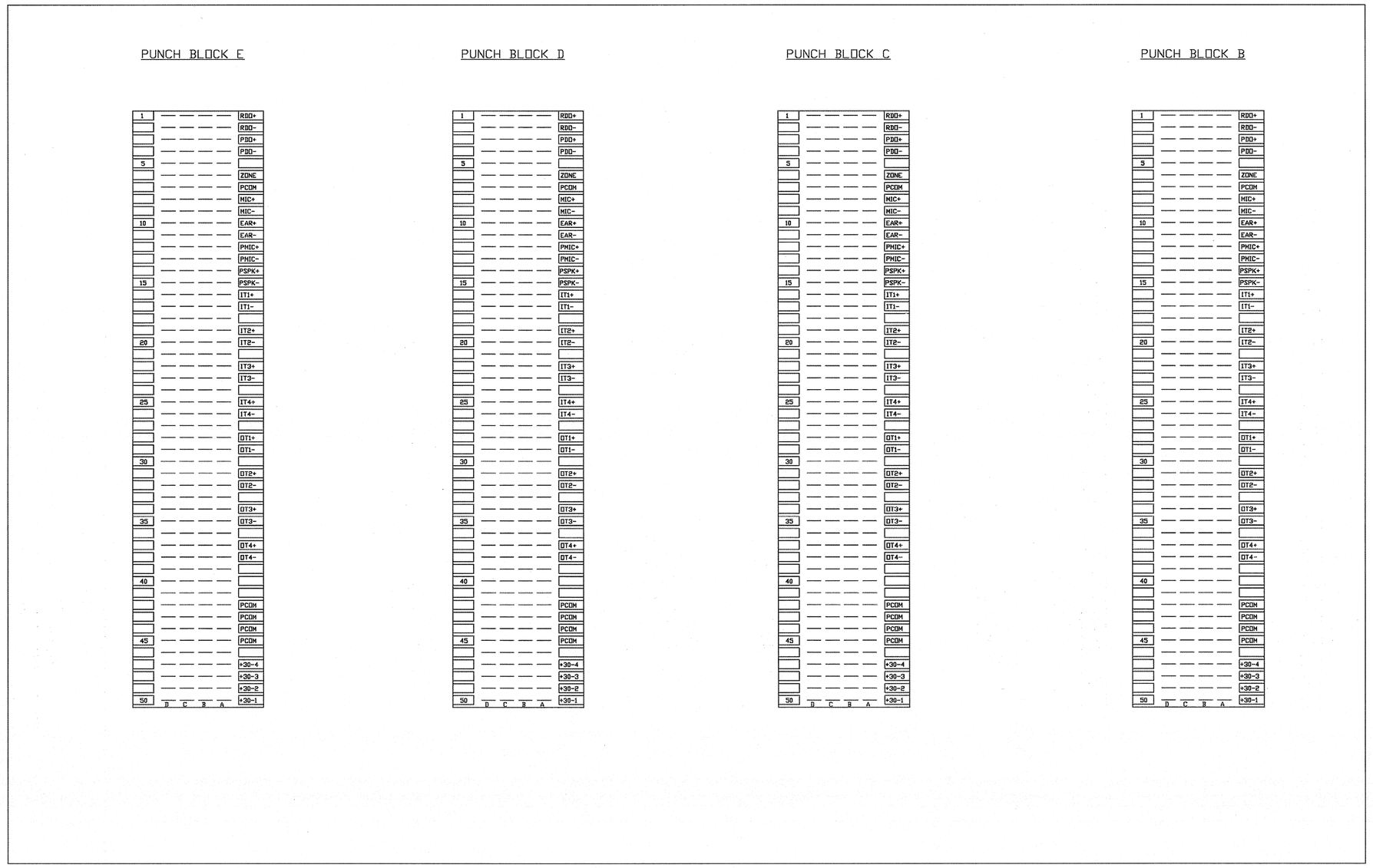

Sentinel 500

NETWORK POWER SUPPLY & EXCHANGE ASSEMBLY MODELS SNT37x020

Installation Diagram

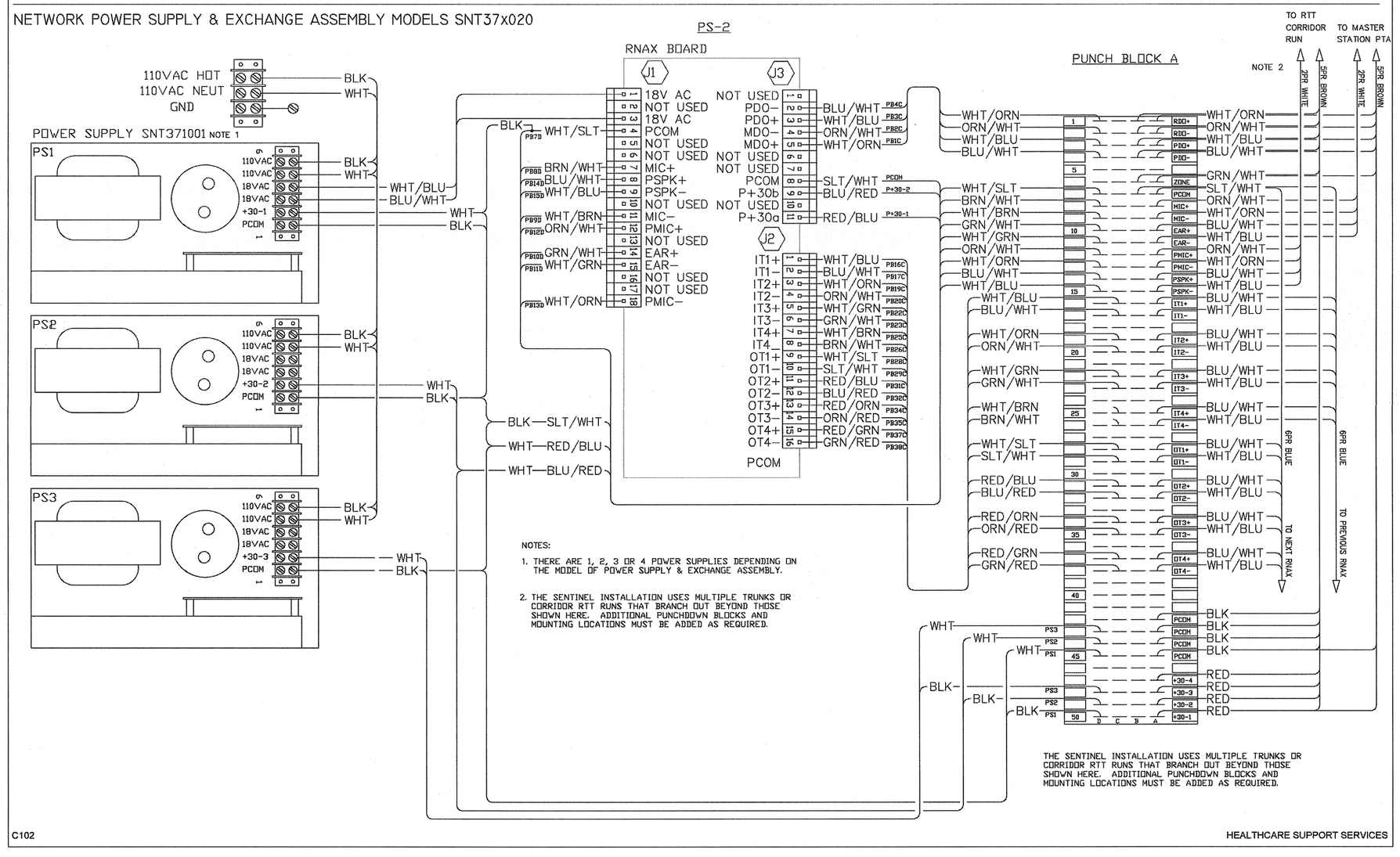

TYPICAL POWER SUPPLY

CABINET PS-2

CABLE FROM			TERMINATION POINT	
LABEL	JACKET	CONDUCTOR	SIGNAL TYPE	PUNCH BLOCK
NH-2	BRV	RED	+30v	BLOCK A, PIN 48C
NH-2	BRV	BLK	PCOM	BLOCK A, PIN 43C
NH-2	BRV	VHT/ORN	RXD+	BLOCK A, PIN 1D
NH-2	BRV	ORN/VHT	RXD-	BLOCK A, PIN 2D
NH-2	BRV	VHT/BLU	PXD+	BLOCK A, PIN 3D
NH-2	BRV	BLU/VHT	PXD-	BLOCK A, PIN 4D
NH-2	BRV	ORN/VHT	ZONE	BLOCK A, PIN 6D
NH-2	VHT	BLU/VHT	EAR+	BLOCK A, PIN 8D
NH-2	VHT	VHT/BLU	EAR-	BLOCK A, PIN 11D
NH-2	VHT	ORN/VHT	MIC+	BLOCK A, PIN 8D
NH-2	VHT	VHT/ORN	MIC-	BLOCK A, PIN 9D
3RSFL	BRV	RED	+30v	BLOCK A, PIN 48A
3RSFL	BRV	BLK	PCOM	BLOCK A, PIN 43A
PS2-1	BRV	RED	+30v	BLOCK A, PIN 50A
PS2-1	BRV	BLK	PCOM	BLOCK A, PIN 45A
2ND	BRV	VHT/ORN	RXD+	BLOCK A, PIN 1B
2ND	BRV	ORN/VHT	RXD-	BLOCK A, PIN 2B
2ND	BRV	VHT/BLU	PXD+	BLOCK A, PIN 3B
2ND	BRV	BLU/VHT	PXD-	BLOCK A, PIN 4B
2ND	BRV	ORN/VHT	ZONE	BLOCK A, PIN 6B
2ND	VHT	BLU/VHT	PSPK+	BLOCK A, PIN 12B
2ND	VHT	VHT/BLU	PSPK-	BLOCK A, PIN 13B
2ND	VHT	ORN/VHT	PHIC+	BLOCK A,PIN 14B
2ND	VHT	VHT/ORN	PHIC-	BLOCK A, PIN 15B

CABINET PS-2

CABLE FROM			TERMINATION POINT	
LABEL	JACKET	CONDUCTOR	SIGNAL TYPE	PUNCH BLOCK
3RSFL	BRV	ORN/VHT	ZONE	BLOCK B, PIN 8C
3RSFL	VHT	ORN/VHT	PHIC+	BLOCK B, PIN 4C
3RSFL	VHT	VHT/ORN	PHIC-	BLOCK B, PIN 6C
PS2-2	BRV	ORN/VHT	ZONE	BLOCK B, PIN 8F
PS2-2	VHT	ORN/VHT	PHIC+	BLOCK B, PIN 4F
PS2-2	VHT	VHT/ORN	PHIC-	BLOCK B, PIN 6F
PS2-1	BRV	ORN/VHT	ZONE	BLOCK B, PIN 23
PS2-1	VHT	ORN/VHT	PHIC+	BLOCK B, PIN 43
PS2-1	VHT	VHT/ORN	PHIC-	BLOCK B, PIN 63
4THFL	BRV	ORN/VHT	ZONE	BLOCK B, PIN 2C
4THFL	VHT	ORN/VHT	PHIC+	BLOCK B, PIN 4C
4THFL	VHT	VHT/ORN	PHIC-	BLOCK B, PIN 6E
5THFL	BRV	ORN/VHT	ZONE	BLOCK B, PIN 20
5THFL	VHT	ORN/VHT	PHIC+	BLOCK B, PIN 43
5THFL	VHT	VHT/ORN	PHIC-	BLOCK B, PIN 62

CABINET PS-2

CABLE FROM			TERMINATION POINT	
LABEL	JACKET	CONDUCTOR	SIGNAL TYPE	PUNCH BLOCK
3RSFL	BRV	VHT/ORN	RXD+	BLOCK C, PIN 4C
3RSFL	BRV	ORN/VHT	RXD-	BLOCK C, PIN 6C
PS2-2	BRV	RED	+30v	BLOCK C, PIN 2F
PS2-2	BRV	BLK	PCOM	BLOCK C, PIN 1F
PS2-2	BRV	VHT/ORN	RXD+	BLOCK C, PIN 4F
PS2-2	BRV	ORN/VHT	RXD-	BLOCK C, PIN 6F
PS2-1	BRV	VHT/ORN	RXD+	BLOCK C, PIN 43
PS2-1	BRV	ORN/VHT	RXD-	BLOCK C, PIN 63
4THFL	BRV	RED	+30v	BLOCK C, PIN 2C
4THFL	BRV	BLK	PCOM	BLOCK C, PIN 1E
4THFL	BRV	VHT/ORN	RXD+	BLOCK C, PIN 4E
4THFL	BRV	ORN/VHT	RXD-	BLOCK C, PIN 6E
5THFL	BRV	RED	+30v	BLOCK C, PIN 23
5THFL	BRV	BLK	PCOM	BLOCK C, PIN 21
5THFL	BRV	VHT/ORN	RXD+	BLOCK C, PIN 43
5THFL	BRV	ORN/VHT	RXD-	BLOCK C, PIN 63

CABINET PS-2

CABLE FROM			TERMINATION POINT	
LABEL	JACKET	CONDUCTOR	SIGNAL TYPE	PUNCH BLOCK
3RSFL	VHT	BLU/VHT	PSPK+	BLOCK D, PIN 4C
3RSFL	VHT	VHT/BLU	PSPK-	BLOCK D, PIN 6C
PS2-2	VHT	BLU/VHT	PSPK+	BLOCK D, PIN 4F
PS2-2	VHT	VHT/BLU	PSPK-	BLOCK D, PIN 6F
PS2-1	VHT	BLU/VHT	PSPK+	BLOCK D, PIN 43
PS2-1	VHT	VHT/BLU	PSPK-	BLOCK D, PIN 63
4THFL	VHT	BLU/VHT	PSPK+	BLOCK D, PIN 4E
4THFL	VHT	VHT/BLU	PSPK-	BLOCK D, PIN 6E
5THFL	VHT	BLU/VHT	PSPK+	BLOCK D, PIN 43
5THFL	VHT	VHT/BLU	PSPK-	BLOCK D, PIN 63

CABINET PS-2

CABLE FROM			TERMINATION POINT	
LABEL	JACKET	CONDUCTOR	SIGNAL TYPE	PUNCH BLOCK
3RSFL	BRV	VHT/BLU	PXD+	BLOCK E, PIN 4C
3RSFL	BRV	BLU/VHT	PXD-	BLOCK E, PIN 6C
PS2-2	BRV	VHT/BLU	PXD+	BLOCK E, PIN 4F
PS2-2	BRV	BLU/VHT	PXD-	BLOCK E, PIN 6F
PS2-1	BRV	VHT/BLU	PXD+	BLOCK E, PIN 43
PS2-1	BRV	BLU/VHT	PXD-	BLOCK E, PIN 63
4THFL	BRV	VHT/BLU	PXD+	BLOCK E, PIN 4E
4THFL	BRV	BLU/VHT	PXD-	BLOCK E, PIN 6E
5THFL	BRV	VHT/BLU	PXD+	BLOCK E, PIN 43
5THFL	BRV	BLU/VHT	PXD-	BLOCK E, PIN 63

NO.	DATE	REVISION DESCRIPTION
A	02/21/08	RECORD DRAWINGS (BDC)
B	01/26/09	RECORD DRAWINGS (MDP)
C	04/03/09	RENUMBER DRAWINGS AND ADD NC1.08 (MDP)
D	06/05/09	RECORD DRAWINGS (PH)

tyco / Fire & Security / SimplexGrinnell

6240 SMITH ROAD
DENVER, COLORADO 80216
SALES: (303) 355-0500
SERVICE: (303) 355-0500
FAX: (303) 355-0615

©2003 SIMPLEXGRINNELL LP
ALL RIGHTS RESERVED

NURSE CALL SYSTEM FOR:
VAMC - GRAND JUNCTION, COLORADO

NURSE CALL REPLACEMENT AND UPGRADES

2121 NORTH AVE.
GRAND JUNCTION, COLORADO 81501

DRAWN BY: KO	DATE: 04/25/04
DESIGNED BY:	DATE:
APPROVED BY:	DATE:
PROJECT #: 847597001	
SCALE: NTS	
SHEET TITLE: POWER SUPPLY PLAN	
SHEET NUMBER: NC1.05	