PUNCH BLOCK B

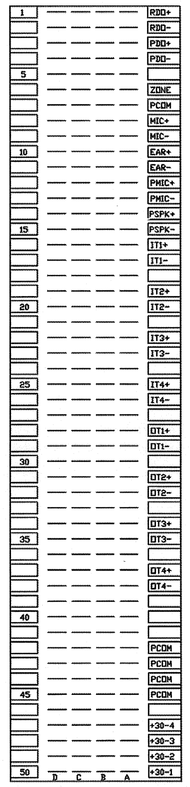

CABINET PS-3

CABLE FROM		TERMINATION POINT		
LABEL	JACKET	CONDUCTOR	SIGNAL TYPE	PUNCH BLOCK
PS3-1	BRV	VHT/ORN	RXD+	BLOCK B, TERM 7
PS3-1	BRV	GRN/VHT	RXD-	BLOCK B, TERM 9
PS3-1	BRV	VHT/BLU	PXD+	BLOCK B, TERM 3
PS3-1	BRV	BLU/VHT	PXD-	BLOCK B, TERM 1
PS3-1	BRV	GRN/VHT	ZONE	BLOCK B, TERM 9
PS3-1	VHT	BLU/VHT	PSPK+	BLOCK B, TERM 15
PS3-1	VHT	VHT/BLU	PSPK-	BLOCK B, TERM 17
PS3-1	VHT	GRN/VHT	PMIC+	BLOCK B, TERM 11
PS3-1	VHT	VHT/ORN	PMIC-	BLOCK B, TERM 13
PS3-2	BRV	VHT/ORN	RXD+	BLOCK B, TERM 7
PS3-2	BRV	GRN/VHT	RXD-	BLOCK B, TERM 5
PS3-2	BRV	VHT/BLU	PXD+	BLOCK B, TERM 3
PS3-2	BRV	BLU/VHT	PXD-	BLOCK B, TERM 1
PS3-2	BRV	GRN/VHT	ZONE	BLOCK B, TERM 9
PS3-2	VHT	BLU/VHT	PSPK+	BLOCK B, TERM 15
PS3-2	VHT	VHT/BLU	PSPK-	BLOCK B, TERM 17
PS3-2	VHT	GRN/VHT	PMIC+	BLOCK B, TERM 11
PS3-2	VHT	VHT/ORN	PMIC-	BLOCK B, TERM 13
PS3-3	BRV	VHT/ORN	RXD+	BLOCK B, TERM 8
PS3-3	BRV	GRN/VHT	RXD-	BLOCK B, TERM 4
PS3-3	BRV	VHT/BLU	PXD-	BLOCK B, TERM 4
PS3-3	BRV	BLU/VHT	PXD-	BLOCK B, TERM 2
PS3-3	BRV	GRN/VHT	ZONE	BLOCK B, TERM 10
PS3-3	VHT	BLU/VHT	PSPK+	BLOCK B, TERM 16
PS3-3	VHT	VHT/BLU	PSPK-	BLOCK B, TERM 18
PS3-3	VHT	GRN/VHT	PMIC+	BLOCK B, TERM 12
PS3-3	VHT	VHT/ORN	PMIC-	BLOCK B, TERM 14

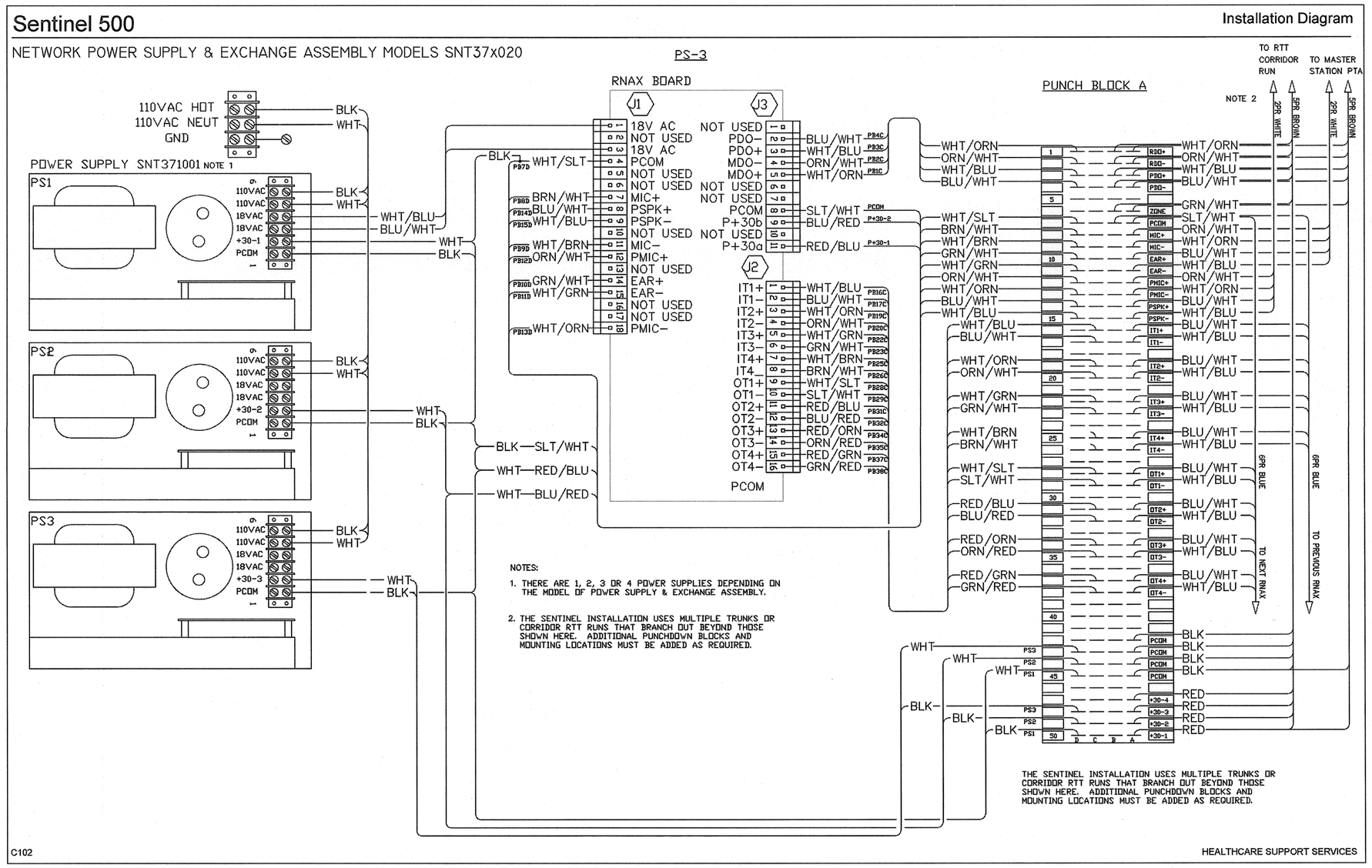

CABINET PS-3

CABLE FROM		TERMINATION POINT		
LABEL	JACKET	CONDUCTOR	SIGNAL TYPE	PUNCH BLOCK
NH-3	BRV	RED	+30v	BLOCK A, PIN 50C
NH-3	BRV	BLK	PCOM	BLOCK A, PIN 46C
NH-3	BRV	VHT/ORN	RXD+	BLOCK A, PIN 19
NH-3	BRV	ORN/VHT	RXD-	BLOCK A, PIN 23
NH-3	BRV	VHT/BLU	PXD+	BLOCK A, PIN 35
NH-3	BRV	BLU/VHT	PXD-	BLOCK A, PIN 43
NH-3	BRV	GRN/VHT	ZONE	BLOCK A, PIN 63
NH-3	VHT	BLU/VHT	EAR+	BLOCK A, PIN 103
NH-3	VHT	VHT/BLU	EAR-	BLOCK A, PIN 110
NH-3	VHT	ORN/VHT	MIC+	BLOCK A, PIN 83
NH-3	VHT	VHT/ORN	MIC-	BLOCK A, PIN 90
PS3-1	BRV	RED	+30v	BLOCK A, PIN 50A
PS3-1	BRV	BLK	PCOM	BLOCK A, PIN 46A
PS3-2	BRV	RED	+30v	BLOCK A, PIN 49A
PS3-2	BRV	BLK	PCOM	BLOCK A, PIN 45A
PS3-3	BRV	RED	+30v	BLOCK A, PIN 48A
PS3-3	BRV	BLK	PCOM	BLOCK A, PIN 44A

TYPICAL POWER SUPPLY

tyco / Fire & Security / SimplexGrinnell

8240 SMITH ROAD
DENVER, COLORADO 80216
SALES: (303) 355-0500
SERVICE: (303) 355-0600
FAX: (303) 355-0615

©2001 SIMPLEXGRINNELL LP
ALL RIGHTS RESERVED

NO.	DATE	REVISION DESCRIPTION
A	02/21/08	RECORD DRAWINGS (BDC)
B	01/26/09	RECORD DRAWINGS (MDP)
C	04/03/09	RENUMBER DRAWINGS AND ADD NC1.08 (MDP)
D	06/05/09	RECORD DRAWINGS (PH)
E	02/10/10	RECORD DRAWING PER FEBRUARY COMMENTS (GLS)

NURSE CALL SYSTEM FOR:
VAMC – GRAND JUNCTION, COLORADO

NURSE CALL REPLACEMENT AND UPGRADES

2121 NORTH AVE.
GRAND JUNCTION, COLORADO 81501

DRAWN BY: KO	DATE: 04/25/04
DESIGNED BY:	DATE:
APPROVED BY:	DATE:
PROJECT #: 847597001	
SCALE: NTS	
SHEET TITLE: POWER SUPPLY PLAN	
SHEET NUMBER: NC1.06	

42" x 30"