BASEMENT LEVEL FINISH SCHEDULE

ROOM #	NAME	FLOOR	BASE	S WALL	W WALL	N WALL	E WALL	CEILING	COMMENTS
BS01	MENS	SCF-2	SCF-2	PNT-1/CWT-1/CWT-2	PNT-1	PNT-1	PNT-1	ACT-1	SS-3 AT THE COUNTERS W/ 4" BACK SPLASH. SS-6 INTEGRAL BOWL SINK. VB-1 @ LOCKERS. SEE CWT WAINSCOT DETAIL BELOW
BS02	WOMENS	SCF-2	SCF-2	PNT-1	PNT-1	PNT-1/CWT-1/CWT-2	PNT-1	ACT-1	SS-3 AT THE COUNTERS W/ 4" BACK SPLASH. SS-6 INTEGRAL BOWL SINK. VB-1 @ LOCKERS. SEE CWT WAINSCOT DETAIL BELOW
BS03	HAZ STORAGE	CS-1	VB-1	PNT-1	PNT-1	PNT-1	PNT-1	ACT-2	
BS05	WASH RACK	TEF-1	TEF-1	CMU-1	CMU-1	CMU-1	CMU-1	ACT-2	EPOXY TROWEL FLOOR WITH COVED BASE; CMU-1 WALLS, 4" pre-faced cmu
BS05A	PUMP ROOM	CS-1	VB-1	PNT-1	PNT-1	PNT-1	PNT-1	ACT-2	
BS05B	EQUIP	TEF-1	TEF-1	PNT-1	PNT-1	PNT-1	PNT-1	ACT-2	EPOXY TROWEL FLOOR WITH COVED BASE;CMU-1 WALLS, 4" pre-faced cmu
BS07	SOILED LINEN	CS-1	VB-1	PNT-1	PNT-1	PNT-1	PNT-1	GWB	INSTALL CRASHRAIL ON ALL WALLS. REFER TO 11/1-A14 SIM FINISH TO BE WP-1
BCS02	CORRIDOR	SCF-1	SCF-1	PNT-XX	PNT-XX	PNT-XX	PNT-XX	ACT-1	REPAIR WITH FINISHES TO MATCH EXISTING
BCS03	CORRIDOR	SCF-1	SCF-1	PNT-XX	PNT-XX	PNT-XX	PNT-XX	ACT-1	REPAIR WITH FINISHES TO MATCH EXISTING

GENERAL NOTE: FOR CEILING HEIGHTS REFER TO SHEETS 1-A11(BASEMENT) AND 1-A12 (FOURTH FLOOR)

FOURTH FLOOR FINISH SCHEDULE

ROOM #	NAME	FLOOR	BASE	S WALL	W WALL	N WALL	E WALL	CEILING	COMMENTS
4E01	WAITING	CPT-1	VB-1	PNT-1	PNT-1/PNT-2/SS-5	PNT-2/SS-5	PNT-1	ACT-1	SEE ELEVATIONS E7 AND F4 THIS SHEET FOR FINISH LOCATIONS
4CE01	CORRIDOR	VSF-6	VSF-6	PNT-2/WP-2/SS-5				ACT-1	SEE ELEVATIONS C4 AND E3 FOR FINISH LOCATIONS; USE PNT-6 AS NEEDED TO MATCH ADJACENT PAINT PATTERNS (CONTACT VA INTERIOR DESIGNER TO ADVISE)
4E01A	CONSULT	CPT-1	VB-1	PNT-1	PNT-1	PNT-1	PNT-1	ACT-1	
4E02	ANES. EXAM	VSF-1	VSF-1	PNT-1	PNT-1	PNT-1	PNT-1	ACT-1	SS-2 TO BE USED AT COUNTERTOPS AND PL-1 AT CASEWORK
4E02A	RESIDENTS	VSF-4	VSF-4	PNT-3	PNT-3	PNT-1	PNT-3	ACT-1	
4E02B	ANES. EXAM	VSF-1	VSF-1	PNT-1	PNT-1	PNT-1	PNT-1	ACT-1	SS-2 TO BE USED AT COUNTERTOPS AND PL-1 AT CASEWORK
4E02C	CASE MGRS	CPT-1	VB-1	PNT-1	PNT-1	PNT-1	PNT-1	ACT-1	
4E02D	ANES. EXAM	VSF-1	VSF-1	PNT-1	PNT-1	PNT-1	PNT-1	ACT-1	SS-2 TO BE USED AT COUNTERTOPS AND PL-1 AT CASEWORK
4CE02	CORRIDOR	VSF-6	VSF-6			PNT-2	PNT-2	ACT-1	
4E03A	CONFERENCE	VSF-4/VSF-5	VSF-4	PNT-3	PNT-1	PNT-1	PNT-3	ACT-1	SEE 1-A21 FOR FLOOR PATTERN.
4CE03	CORRIDOR	VSF-6	VSF-6	PNT-2	PNT-2	PNT-2	PNT-2	ACT-1	
4S02	ELEC	VSF-1	VSF-1	PNT-1	PNT-1	PNT-1	PNT-1	ACT-1	
4S04	LOUNGE	VSF-4/VSF-5	VSF-4	PNT-1	PNT-1	PNT-3	PNT-3	ACT-1	SEE 1-A21 FOR FLOOR PATTERN.WINDOW SILLS AND COUNTERTOPS TO BE SS-4. SEE DETAIL E1 THIS SHEET FOR SILL DETAIL.
4CS04	CORRIDOR	VSF-3	VSF-3	PNT-2	PNT-2	PNT-2	PNT-2	ACT-1	
4S06	MENS	SCF-1	VB-1/PWB-1	CWT-1/CWT-2/PNT-1	PNT-1	PNT-1	PNT-1	ACT-1	VB-1 @ LOCKERS ONLY/PWB-1 AT WAINSCOT SEE F9 THIS SHEET FOR DETAIL. SS-4 COUNTER TOP AND SILLS.
4S07	WOMENS	SCF-1	VB-1/PWB-1	PNT-1	PNT-1	CWT-1/CWT-2/PNT-1	PNT-1	ACT-1	VB-1 @ LOCKERS ONLY/PWB-1 AT WAINSCOT SEE F9 THIS SHEET FOR DETAIL. SS-4 COUNTER TOP AND SILLS.
4CS08	CORRIDOR	VSF-1	VSF-1			PNT-2	PNT-2	ACT-1	
4S09	CHASE	VSF-1	VSF-1	PNT-1	PNT-1	PNT-1	PNT-1	ACT-1	
4S11	COM	VSF-1	VSF-1	PNT-1	PNT-1	PNT-1	PNT-1	ACT-1	
4S13	ELEC	VSF-1	VSF-1	PNT-1	PNT-1	PNT-1	PNT-1	ACT-1	
4S14	SOILED	VSF-3	VSF-3	PNT-1	PNT-1	PNT-1	PNT-1	ACT-1	
4S15	HAC	PFT-1	PWB-1	PNT-1	PNT-1	PNT-1	PNT-1	ACT-1	
4S16	CLEAN	VSF-3	VSF-3	PNT-1	PNT-1	PNT-1	PNT-1	ACT-1	
4S19	ANTE	VSF-3	VSF-3	PNT-1	PNT-1	PNT-1	PNT-1	GWB	
4S21	ISOLATION	VSF-3	VSF-3	PNT-1	PNT-1	PNT-1	PNT-1	GWB	
4S22	ST	PFT-1	PWB-1	PNT-1/CWT-1/CWT-2	PNT-1/CWT-1/CWT-2	PNT-1/CWT-1/CWT-2	PNT-1/CWT-1/CWT-2	ACT-1	SEE F9, THIS SHEET FOR WAINSCOT DETAIL.
4S23	BARIATRICS	VSF-3	VSF-3	PNT-1	PNT-1	PNT-1	PNT-1	ACT-1	
4S24	NOURISH	VSF-3	VSF-3	PNT-1	PNT-1	PNT-1	PNT-1	ACT-1	
4S25	STOR	VSF-3	VSF-3	PNT-1	PNT-1	PNT-1	PNT-1	ACT-1	
4S26	NURSES STATION	VSF-3	VSF-3	PNT-3	PNT-3	PNT-3	PNT-3	ACT-1	PNT-3 ACCENT PAINT AT NEW SOFFITS AROUND NURSES STATION SEE 1-A22.
4S26A	DICTATION	VSF-3	VSF-3	PNT-1	PNT-1	PNT-1	PNT-1	ACT-1	
4S27	MEDS	VSF-3	VSF-3	PNT-1	PNT-1	PNT-1	PNT-1	GWB	
4S28	SUPPLIES	VSF-3	VSF-3	PNT-1	PNT-1	PNT-1	PNT-1	ACT-1	
4S29	STOR	VSF-3	VSF-3	PNT-1	PNT-1	PNT-1	PNT-1	ACT-1	
4S30	PAC-U ALCOVES	VSF-3	VSF-3	PNT-1	PNT-1	PNT-1	PNT-1	ACT-1	WEST WALL CUBICLE CURTAINS TO BE CC-1

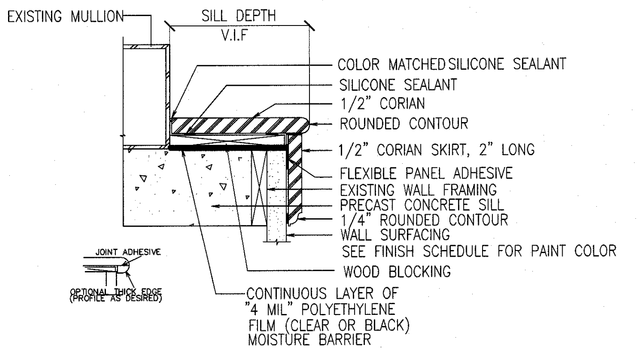

NOTE: SILLS SHALL BE SS-2 ON FOURTH FLOOR EXCEPT LOUNGE WINDOW SILLS SHALL BE SS-4 IN THAT AREA ONLY.
ALL WINDOWS SILLS IN BASEMENT SHALL BE SS-3

CORIAN WINDOW SILL DETAIL
N.T.S — D1 / 1-A25

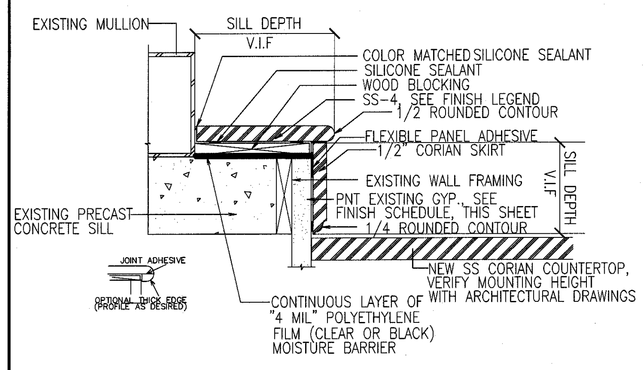

CORIAN WINDOW SILL AT COUNTERS DETAIL
N.T.S — E1 / 1-A25

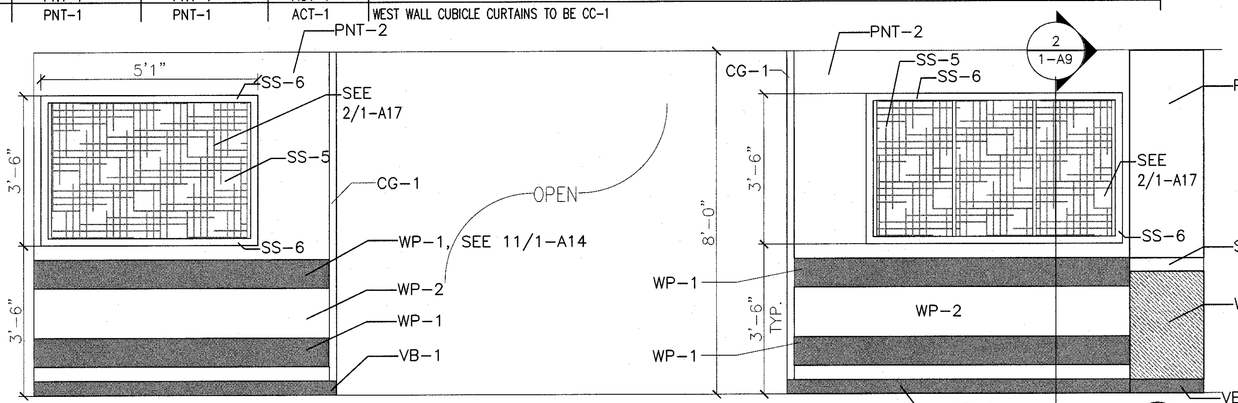

CORRIDOR ELEVATION
1/2" = 1'-0" — C4 / 1-A25

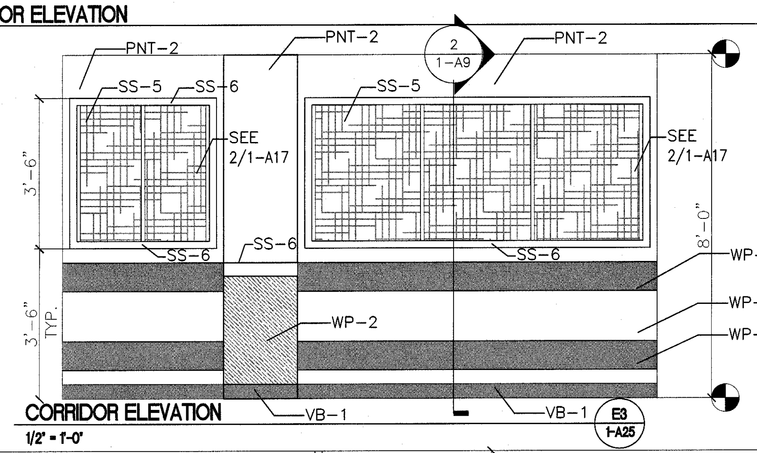

CORRIDOR ELEVATION
1/2" = 1'-0" — E3 / 1-A25

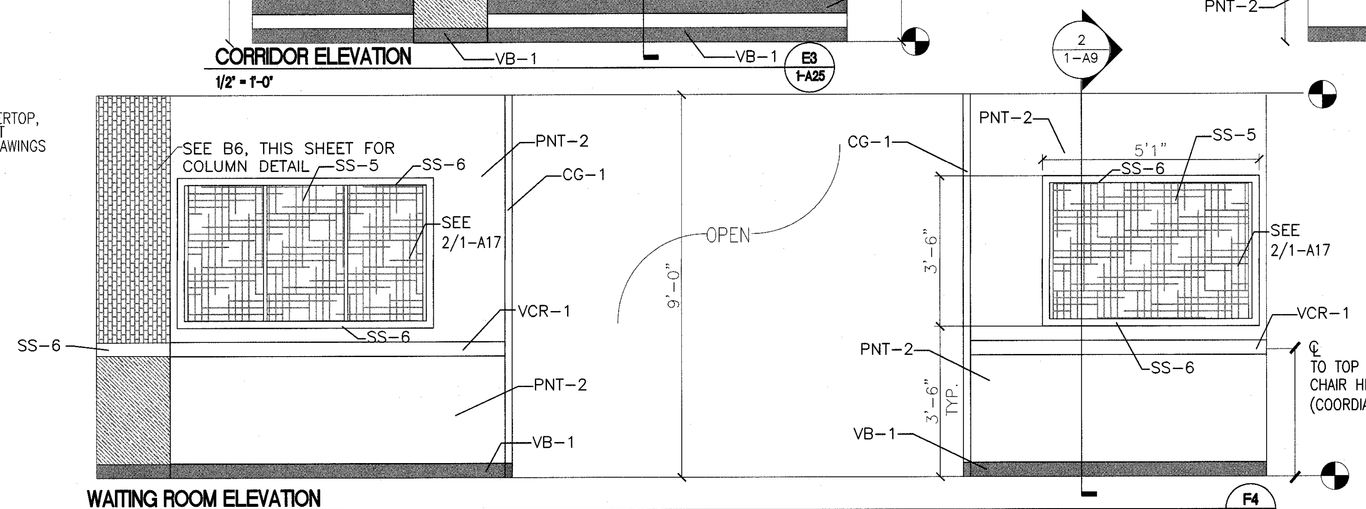

WAITING ROOM ELEVATION
1/2" = 1'-0" — F4 / 1-A25

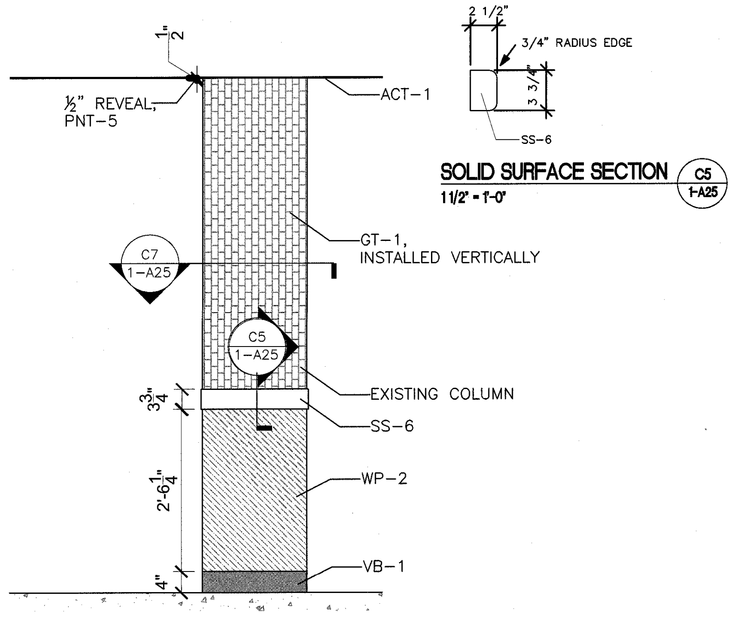

SOLID SURFACE SECTION
1 1/2" = 1'-0" — C5 / 1-A25

TYPICAL COLUMN ELEVATION
1/2" = 1'-0" — B6 / 1-A25

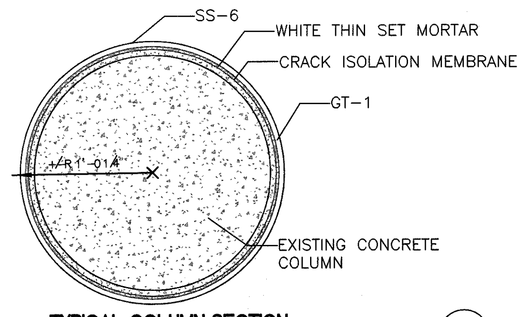

TYPICAL COLUMN SECTION
1 1/2" = 1'-0" — C7 / 1-A25

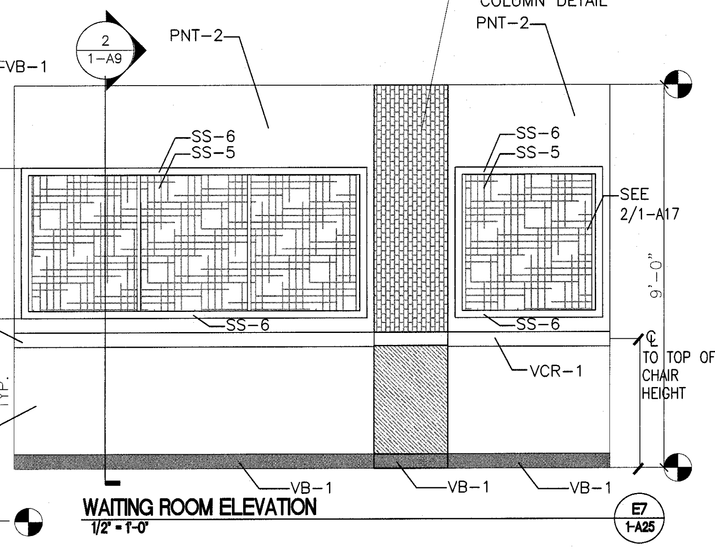

WAITING ROOM ELEVATION
1/2" = 1'-0" — E7 / 1-A25

FINISH LEGEND
("XX" REFERS TO MATCH EXISTING CONDITIONS)

PAINT	MANUFACTURER	COLOR	FINISH
PNT-1	Sherwin Williams	Divine White SW6105	Eggshell
PNT-2	Sherwin Williams*	Accessible Beige SW7036	Eggshell
PNT-3	Sherwin Williams	Spalding Grey SW6074	Eggshell
PNT-4 (trim)	Sherwin Williams	Urbane Bronze SW7048	Semi-Gloss
PNT-5 (REVEAL)	Sherwin Williams	Tricorn Black SW6258	Flat
PNT-6 (CORR)	MDC MICROTEX	TO MATCH LATTE SW 6108	GLOSS LEVEL2

* USE MDC MICROTEX IN COLOR TO MATCH IN CORRIDORS – GLOSS LEVEL 2

DOORS	COLOR
ROTARY CUT	NATURAL

LOCKERS	MANUFACTURER	COLOR
LOK-1(field)	PENCO	CHAMPAGNE 073

FLOOR TILE	MANUFACTURER	COLOR
PFT-1	DALTILE	COLOR SCHEMES URBAN PUTTY 12" x 12"

VINYL BASE	MANUFACTURER	COLOR
VB-1	ROPPE	P193 BLACK BROWN

VINYL CHAIRRAIL	MANUFACTURER	COLOR
VCR-1	JOHNSONITE	RAMPART, 63 BURNT UMBER

WALL TILE	MANUFACTURER	COLOR
CWT-1(FIELD)	DALTILE	ALMOND SEMI-GLOSS 0135 (4.25x4.25)
CWT-2(ACCENT)	DALTILE	URBAN PUTTY SEMI-GLOSS 0161 (4.25x4.25)
GT-1(ACCENT)	MARAZZI	STUDIO M TANGO (BRICK)
PWB-1(BASE)	DALTILE	URBAN PUTTY COVE BASE (6" x 12")

TOILET PARTITION	MANUFACTURER	COLOR
TP-1	WILSONART	PEARL SOAPSTONE 4886-38

CEILING TILE	MANUFACTURER	COLOR
ACT-1	ARMSTRONG	CIRRUS 584- 1937
ACT-2	ARMSTRONG	CLEAN ROOM VL

CARPET	MANUFACTURER	COLOR
CPT-1	LEES	ATTRIBUTE MODULAR DL456 JUNIPER BERRY 407

WALL PROTECTION/CORNER GUARD	MANUFACTURER	COLOR
WP-1(CRASHRAIL)	IN-PRO	CASTLE
WP-2(WALL PROTECTION)	ACROYVN	CLASSIC MAPLE
CG-1	IN-PRO	CHINO

WELDED SHEET VINYL W/ INTEGRAL BASE	MANUFACTURER	COLOR
VSF-1	ARMSTRONG	MEDINTONE SAND MID H8320
VSF-2	ARMSTRONG	GRAYED BLUE H8330
VSF-3	ARMSTRONG	MEDITECH DESERT GOLD 88439
VSF-4	TEKNOFLOR	BEECHNUT 52209
VSF-5	TEKNOFLOR	ORCHARD CHERRY 52204
VSF-6	TEKNOFLOR	JUPARANA TAUPE 08652

FLOOR FINISH	MANUFACTURER	COLOR
SCF-1	STONHARD	RTZ CUSTOM VII-RTZ-1F W/ CF7 FLAT (TAN)
SCF-2	STONHARD	RTZ CUSTOM VII-RTZ-1F W/ CF7 FLAT (BLUE)

TROWELED EPOXY FLOOR W/ INTEGRAL BASE	MANUFACTURER	COLOR
TEF-1	EVERLAST EPOXY FLOORING	GRANITE GRAY

CONCRETE SEALER	MANUFACTURER	COLOR
CS-1	PPG	CLEAR CONCRETE SEALER

SOLID SURFACE	MANUFACTURER	COLOR
SS-1	(UNUSED)	(UNUSED)
SS-2 (FOURTH)	CORIAN	BURNT AMBER
SS-3 (BASEMENT)	CORIAN	SILT
SS-4 (LOUNGE/LOCKERS)	CORIAN	FLINT
SS-5 (WAITING PANEL)	LUMICOR	LUMIFORM S011470 "PAPER LEAF"
SS-6 (COLUMN)	CORIAN	NOCTURNE

PLASTIC LAMINATE	MANUFACTURER	COLOR
PL-1	FORMICA	NATURAL BIRCH 7481

SHOWER/CUBICAL CURTAINS	MANUFACTURER	COLOR
SC-1	SHOWER SHIELD	CREAM
CC-1	ARC|COM	WOODLAND JEWEL 32764

CONCRETE MASONRY UNIT	TYPE/FINISH
CMU-1	CERAMIC GLAZED FACED BRICK

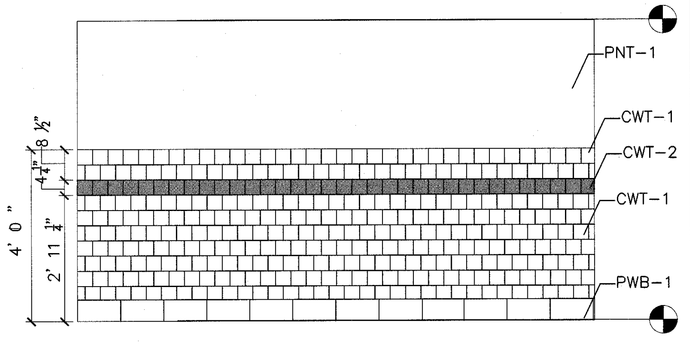

BATHROOM WAINSCOT TILE ELEVATION TYP.
1/2" = 1'-0" — F9 / 1-A25

FULLY SPRINKLERED BUILDING
BID DOCUMENTS

Revisions:	Date

CONSULTANTS:

ARCHITECT/ENGINEERS:
PARADIGM
ENGINEERS AND CONSTRUCTORS
PO BOX 436223 Louisville, Kentucky 40253 – PH: 502.339.8511 – www.paradigmusa.com

9 July 2012
STATE OF KENTUCKY
BLAINE CAMIEL VAN GANSBEKE 24,788
LICENSED PROFESSIONAL ENGINEER

Drawing Title: FINISH SCHEDULE AND LEGEND
Approved: Project Director
Project Title: SURGICAL SUPPORT AND LOCKERS
Location: IOWA CITY VAMC, 601 HIGHWAY 6 WEST, IOWA CITY, IOWA 52246-2208
Date: 07-13-12 | Checked: BVG | Drawn: DML
Project Number: 636A8-11-011
Building Number: 1
Drawing Number: 1-A25

Office of Construction and Facilities Management
Department of Veterans Affairs

VA FORM 08-6231