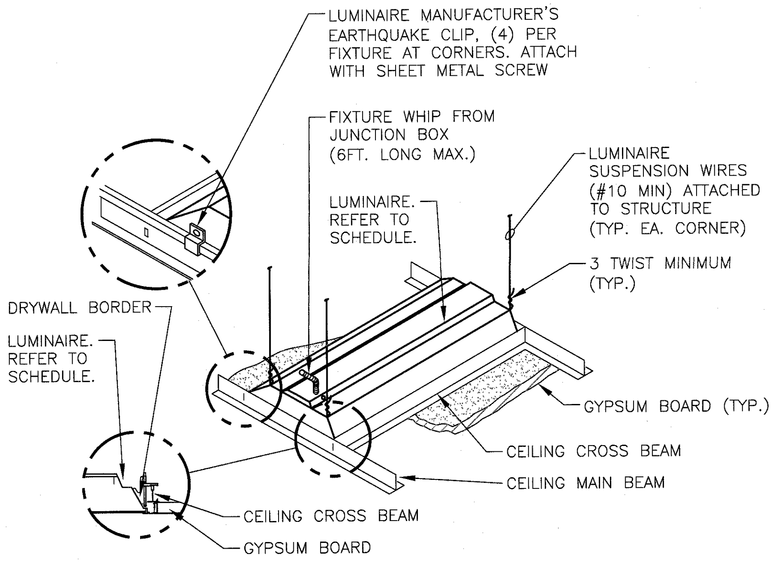

LUMINAIRE MOUNTING - GYPBOARD CEILING

NOT TO SCALE

1 / 1-E10

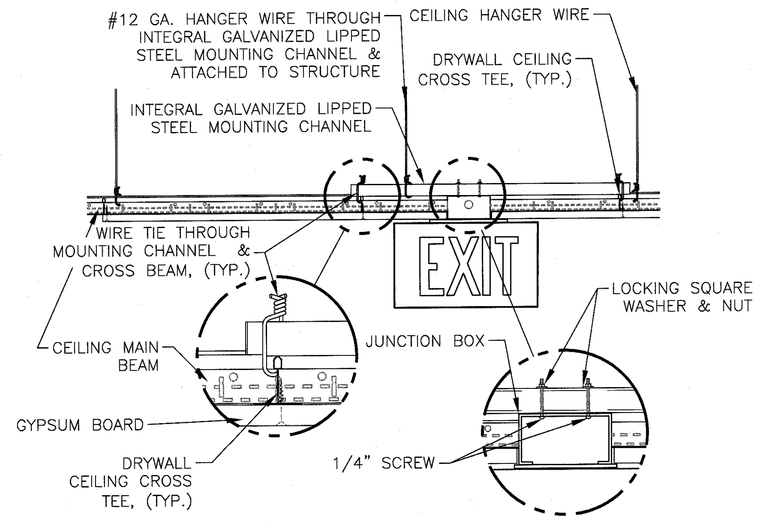

EXIT SIGN MOUNTING - GYPBOARD CEILING

NOT TO SCALE

2 / 1-E10

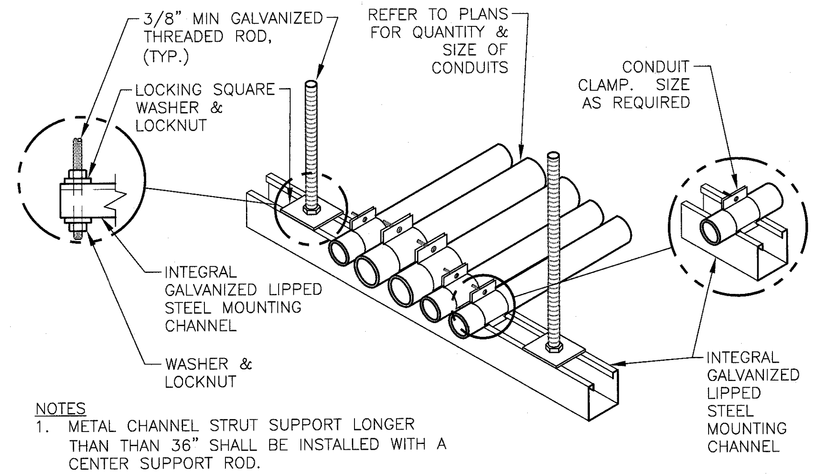

NOTES

1. METAL CHANNEL STRUT SUPPORT LONGER THAN THAN 36" SHALL BE INSTALLED WITH A CENTER SUPPORT ROD.
2. FASTEN THREADED ROD TO STRUCTURE BY APPROVED METHOD PER SPECIFICATION 26 0533, RACEWAYS AND BOXES FOR ELECTRICAL SYSTEMS. FIELD VERIFY EXACT CONDITIONS.
3. FOR TRAPEZE INSTALLATIONS IN SEISMIC AREAS REFER TO SPECIFICATION SECTION 10 05 41, SEISMIC RESTRAINT REQUIREMENTS FOR NON-STRUCTURAL COMPONENTS.

CONDUIT TRAPEZE MOUNTING DETAIL

NO SCALE

3 / 1-E10

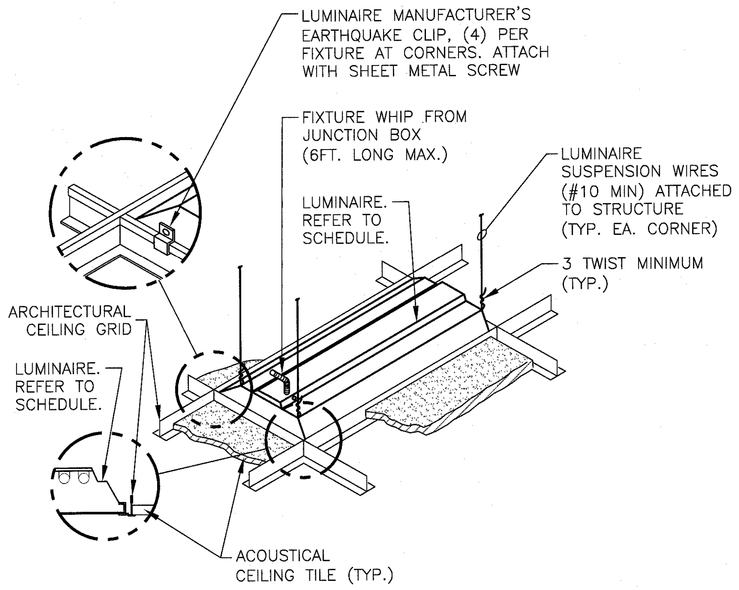

LUMINAIRE MOUNTING - LAY-IN CEILING

NOT TO SCALE

4 / 1-E10

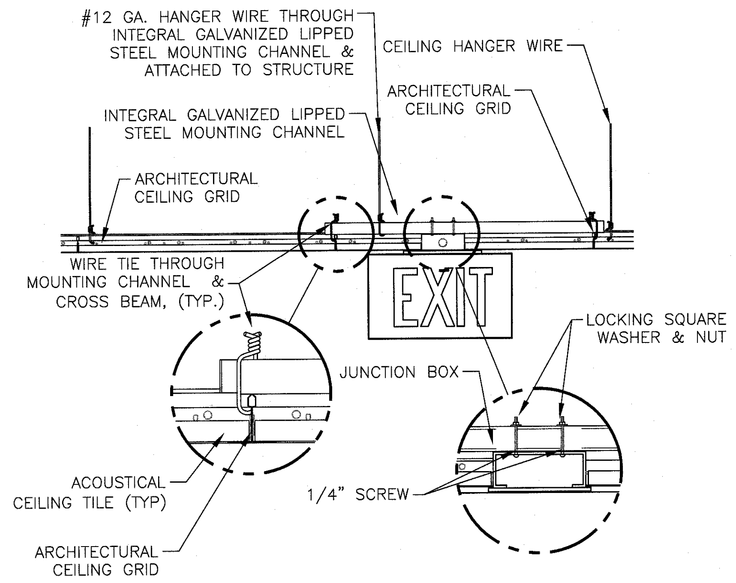

EXIT SIGN MOUNTING - LAY-IN CEILING

NOT TO SCALE

5 / 1-E10

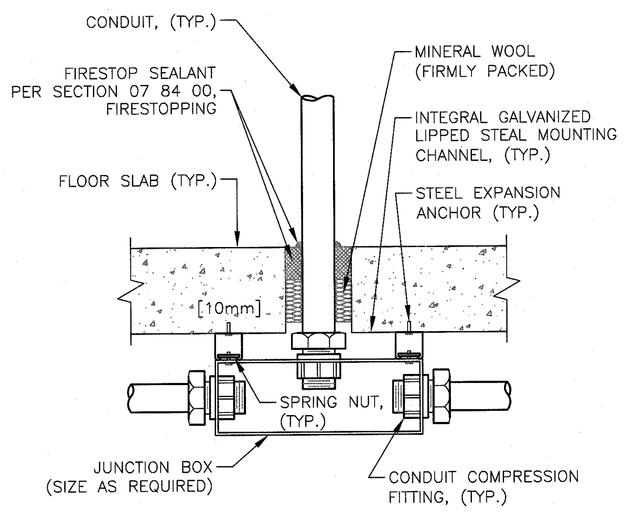

FLOOR SLAB PENETRATION DETAIL

NO SCALE

6 / 1-E10

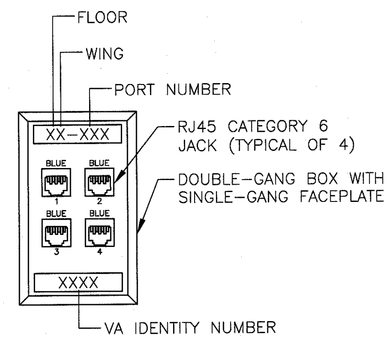

NOTES:

1. REFER TO SPECIFICATIONS DIVISION 27 00 00 FOR COMPLETE INSTALLATION, CERTIFICATION, TESTING, EQUIPMENT, DEVICE, WIRING, CONDUIT, ETC. REQUIREMENTS.

TEL/DATA FACE PLATE DETAIL

NOT TO SCALE

7 / 1-E10

FULLY SPRINKLERED BUILDING
BID DOCUMENTS

Revisions:	Date

CONSULTANTS:

STATE OF WISCONSIN — KERRY LEE PICKETT 36602-006 REGISTERED PROFESSIONAL ENGINEER — 7/19/12

ARCHITECT/ENGINEERS:

PARADIGM ENGINEERS AND CONSTRUCTORS

PO BOX 436223 Louisville, Kentucky 40253 – PH: 502.339.8511 – www.paradigmusa.com

STATE OF KENTUCKY — BLAINE CAMIEL VAN GANSBEKE 24,788 LICENSED PROFESSIONAL ENGINEER — 7/19/2012

Drawing Title: ELECTRICAL DETAILS	Project Title: SURGICAL SUPPORT AND LOCKERS		Project Number: 636A8-11-011
			Building Number: 1
Approved: Project Director	Location: IOWA CITY VAMC, 601 HIGHWAY 6 WEST, IOWA CITY, IOWA 52246-2208		Drawing Number: 1-E10
	Date: 07-13-12	Checked: KLP	Drawn: MPS

Office of Construction and Facilities Management

Department of Veterans Affairs

VA FORM 08-6231