AH1-B3 (CONSTANT VOLUME, 100% OA W/ EF INTERLOCK)

A. RUN CONDITIONS – SCHEDULED OR MANUAL TIMED SWITCH
THE UNIT SHALL BE ABLE TO BE SCHEDULED FROM GRAPHICAL FRONT-END OR PRESSING OVER-RIDE SWITCH LOCATED IN CHILLER PLANT (BE-24). CONTROLS TO BE TIED INTO CENTRAL BAS IN CHILLER PLANT (BE-24).

1. OCCUPIED MODE: THE UNIT SHALL MAINTAIN
   a. A 55°F (ADJ.) DISCHARGE AIR.
2. UNOCCUPIED MODE (NIGHT SETBACK): THE UNIT SHALL MAINTAIN
   a. A 60°F (ADJ.) COOLING SETPOINT
   b. A 55°F (ADJ.) HEATING SETPOINT
3. ALARMS SHALL BE PROVIDED AS FOLLOWS:
   a. HIGH SUPPLY TEMP: IF THE SUPPLY TEMPERATURE IS GREATER THAN THE COOLING SETPOINT BY A USER DEFINABLE AMOUNT (ADJ.)
   b. LOW SUPPLY TEMP: IF THE SUPPLY TEMPERATURE IS LESS THAN THE HEATING SETPOINT BY A USER DEFINABLE AMOUNT (ADJ.)

B. FREEZE PROTECTION:
THE UNIT SHALL SHUT DOWN AND GENERATE AN ALARM UPON RECEIVING A FREEZESTAT STATUS.

C. SUPPLY FAN:
THE SUPPLY FAN SHALL RUN AT ALL TIMES, UNLESS SHUTDOWN ON SAFETIES.

1. ALARMS SHALL BE PROVIDED AS FOLLOWS:
   a. SUPPLY FAN FAILURE: COMMANDED ON, BUT THE STATUS IS OFF.
   b. SUPPLY FAN IN HAND: COMMANDED OFF, BUT THE STATUS IS ON.

D. EXHAUST FAN (INTERLOCKED WITH SF):
THE EXHAUST FAN EF-1 SHALL RUN AT ALL TIMES, UNLESS SHUTDOWN ON SAFETIES.
1. ALARMS SHALL BE PROVIDED AS FOLLOWS:
   a. EXHAUST FAN FAILURE: COMMANDED ON, BUT THE STATUS IS OFF.
   b. EXHAUST: COMMANDED OFF, BUT THE STATUS IS ON.

E. PREHEATING COIL STEAM VALVE:
THE CONTROLLER SHALL MEASURE THE SUPPLY AIR TEMPERATURE AND MODULATE THE PREHEATING STEAM VALVE TO MAINTAIN ITS SETPOINT OF 60°F (ADJ.). THE PREHEATING SHALL BE ENABLED WHENEVER:

1. OUTSIDE AIR TEMPERATURE IS LESS THAN 50°F (ADJ.)
2. AND COOLING IS NOT ACTIVE.
3. AND THE SUPPLY FAN STATUS IS ON.
4. AND THE RETURN FAN STATUS IS ON.

F. THE PREHEATING COIL STEAM VALVE SHALL OPEN FOR FREEZE PROTECTION WHENEVER:

1. INCOMING (OUTSIDE) AIR TEMPERATURE IS LESS THAN 40°F (ADJ.)
2. OR THE FREEZESTAT (IF PRESENT) IS ON.
3. OR LOW SUPPLY TEMPERATURE ALARM IS ON.

G. CHILLED WATER COOLING COIL VALVE:
THE CONTROLLER SHALL MEASURE THE SUPPLY AIR TEMPERATURE AND MODULATE THE CHILLED WATER COOLING COIL VALVE TO MAINTAIN ITS COOLING SETPOINT OF 55°F (ADJ.) WITH PROOF OF CLOSURE.

1. THE CHILLED WATER COOLING SHALL BE ENABLED WHENEVER:
   a. OUTSIDE AIR TEMPERATURE IS GREATER THAN 60°F (ADJ.)
   b. AND THE SUPPLY TEMPERATURE IS ABOVE COOLING SETPOINT.
   c. AND THE SUPPLY FAN STATUS IS ON.
   d. AND THE RETURN FAN STATUS IS ON.
   e. AND THE PRE-HEATING COIL IS NOT ACTIVE.
2. THE COOLING COIL VALVE SHALL OPEN TO 50% (ADJ.) WHENEVER THE FREEZESTAT (IF PRESENT) IS ON.

I. HUMIDIFIER
THE SUPPLY HUMIDITY SENSOR SHALL MODULATE THE STEAM VALVE IN THE UNIT-MOUNTED HUMIDIFIER TO MAINTAIN A SUPPLY AIR HUMIDITY SETPOINT OF 50% RELATIVE HUMIDITY.

1. THE STEAM HUMIDIFIER SHALL BE ENABLED WHENEVER:
   a. SUPPLY AIR HUMIDITY IS BELOW 50% RELATIVE HUMIDITY (ADJ.)
   b. AND THE SUPPLY FAN STATUS IS ON.
   c. AND THE EXHAUST FAN STATUS IS ON.
   d. AND THE HOT-GAS BYPASS CIRCUIT IS NOT IN OPERATION FOR DEHUMIDIFICATION.
2. ALARMS SHALL BE PROVIDED AS FOLLOWS:
   a. HIGH SUPPLY AIR HUMIDITY.

J. MONITOR ONLY POINTS:

1. PRE-FILTER PRESSURE.
2. FINAL FILER PRESSURE.

K. UNIT SHALL STOP FROM:

1. FIRE ALARM SIGNAL (MANUAL RESET)(DICTATED BY DUCT DETECTOR SIGNAL TO FIRE ALARM)
2. LOW LEAVING TEMPERATURE (ALARM FIRST)(MANUAL RESET)
3. HIGH LEAVING HUMIDITY (ALARM FIRST)(MANUAL RESET)
4. HIGH LEAVING TEMPERATURE (ALARM FIRST)(MANUAL RESET)
5. EM SWITCH (LOCATED IN SWITCHBOARD)

JOB: RENOVATE 4S FOR SURGERY
BUILDING: BUILDING 1

SYSTEM: AH1-B3

SYSTEM COMPONENT:	POINT ID	ABBREVIATION	POINT LEGEND: DIGITAL/ANALOG/SPACE	SYSTEM OUTPUTS: BINARY	SYSTEM OUTPUTS: ANALOG	SYSTEM INPUTS: BINARY	SYSTEM INPUTS: ANALOG	SYSTEM SOFTWARE/CONTROL: ALARM PROCESSING	SYSTEM SOFTWARE/CONTROL: APPLICATION/FUNCTION	REMARKS
SUPPLY AIR TEMPERATURE	AI-1	SAT					●		●	
SUPPLY AIR HUMIDITY	AI-2	SAH					●		●	
SUPPLY AIR FLOW (CFM)	AI-3	SAF				●	●		●	
SUPPLY STATIC PRESSURE	AI-4	SSP					●		●	
OUTDOOR AIR TEMPERATURE	AI-5	OAT				●			●	
OUTDOOR AIR HUMIDITY	AI-6	OAH				●			●	
PREHEAT TEMPERATURE	AI-7	PHT				●			●	
EXHAUST FAN INDICATOR	AI-8	EFI					●		●	
PRE-FILTER PRESSURE LOSS	AI-9	PFIL				●			●	
AFTER FILTER PRESSURE LOSS	AI-10	AFIL				●			●	
SUPPLY FAN STATUS	BI-1	SF-STS			●				●	
EXHAUST FAN STATUS	BI-2	EF-STS			●				●	
EXHAUST FAN ALARM FAULT	BI-3	EF-ALRM			●					
SUPPLY AIR SMOKE DETECTOR	BI-4	SSD			●					
SUPPLY AIR HIGH STATIC PRESSURE	BI-5	SHSP			●					
LOW LEAVING AIR TEMPERATURE	BI-6	LLT			●					
HIGH LEAVING AIR TEMPERATURE	BI-7	HLT			●					
FREEZE STAT AND ALARM	BI-8				●					
HEATING COIL STATUS	BI-9	PHC			●					
COOLING COIL STATUS	BI-10	CCS			●					
PRE-HEAT VALVE V-2	AO-1	PHV							●	
OUTSIDE AIR DAMPER POSITION	AO-2	OAD-POS								
SUPPLY FAN START/STOP	BO-1	SF-SST		●					●	
EXHAUST FAN START/STOP	BO-2	EF-SST		●					●	
HUMIDIFIER ENABLE ON/OFF	BO-3	HUME		●						
DX COMPRESSOR STAGING (MIN. 2)	BO-4	COMP		●						

*DESIGN/SPECIFY ABILITY TO DRAIN COILS

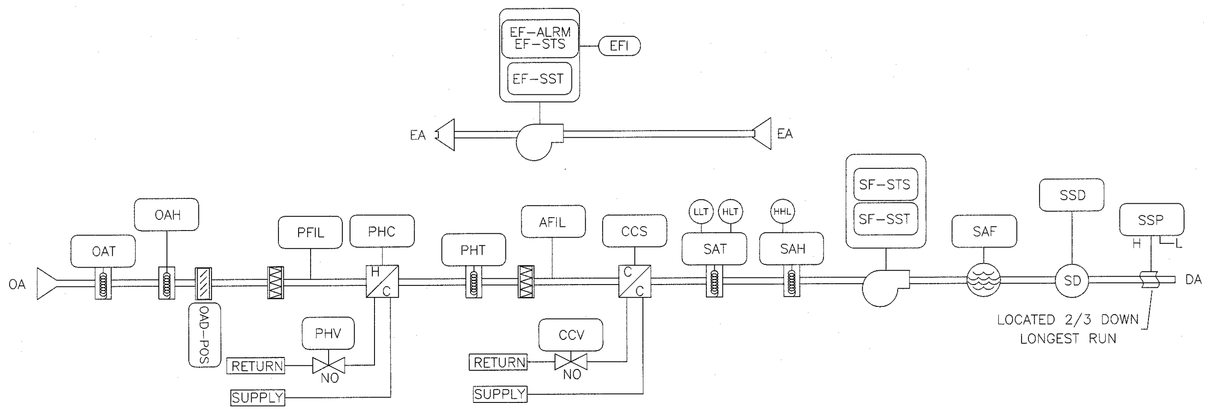

SYSTEM: AH1-B3

AH1-51 (VARIABLE VOLUME W/ EF INTERLOCK)

A. RUN CONDITIONS – SCHEDULED OR MANUAL TIMED SWITCH
THE UNIT SHALL BE ABLE TO BE SCHEDULED FROM GRAPHICAL FRONT-END OR PRESSING OVER-RIDE SWITCH LOCATED IN CHILLER PLANT (BE-24). CONTROLS TO BE TIED INTO CENTRAL BAS IN CHILLER PLANT.

1. OCCUPIED MODE: THE UNIT SHALL MAINTAIN
   a. A 55°F (ADJ.) COOLING SETPOINT
   b. A 60°F (ADJ.) HEATING SETPOINT
   c. IN OCCUPIDE MODE, THE AHU SHALL BE ON AND THE OA DAMPER OPEN. OAT SENSOR IN ECONOMIZER SECTION WILL DETERMINE OA AND RELIEF DAMPER POSITIONS. DAMPER SHALL NEVER CLOSE BEYOND MINIMUM OA REQUIREMENTS (1800 CFM).
2. UNOCCUPIED MODE (NIGHT SETBACK): THE UNIT SHALL MAINTAIN
   a. A 60°F (ADJ.) COOLING SETPOINT
   b. A 55°F (ADJ.) HEATING SETPOINT
   c. IN UNOCCUPIED MODE, THE VFD ON THE AHU SHALL RAMP THE FANS DOWN TO MINIMUM SA CFM RATE (AS INDICATED IN VAV SCHEDULE). RELIEF DAMPER SHALL CLOSE TO MINIMUM O.A. (10,285 CFM) IF O.A. TEMPERATURE IS BELOW 40°, THE STEAM VALVE (IN PREHEAT COIL) SHALL OPEN TO A POSITON UNTIL 60° LAT IS SATISFIED.
3. ALARMS SHALL BE PROVIDED AS FOLLOWS:
   a. HIGH SUPPLY TEMP: IF THE SUPPLY TEMPERATURE IS GREATER THAN THE COOLING SETPOINT BY A USER DEFINABLE AMOUNT (ADJ.)
   b. LOW SUPPLY TEMP: IF THE SUPPLY TEMPERATURE IS LESS THAN THE HEATING SETPOINT BY A USER DEFINABLE AMOUNT (ADJ.)

B. FREEZE PROTECTION:
THE UNIT SHALL SHUT DOWN AND GENERATE AN ALARM UPON RECEIVING A FREEZESTAT STATUS. SHUT OA DAMPER ALSO.

C. SUPPLY FAN:
THE SUPPLY FAN SHALL RUN ANYTIME THE UNIT IS COMMANDED TO RUN, UNLESS SHUTDOWN ON SAFETIES.

1. ALARMS SHALL BE PROVIDED AS FOLLOWS:
   a. SUPPLY FAN FAILURE: COMMANDED ON, BUT THE STATUS IS OFF.
   b. SUPPLY FAN IN HAND: COMMANDED OFF, BUT THE STATUS IS ON.
   c. SUPPLY FAN RUNTIME EXCEEDED: STATUS RUNTIME EXCEEDS A USER DEFINABLE LIMIT (ADJ.)

D. EXHAUST FAN (INTERLOCKED WITH AH1-51):
THE EXHAUST FANS EF-3 SHALL RUN AT ALL TIMES, UNLESS SHUTDOWN ON SAFETIES.

1. ALARMS SHALL BE PROVIDED AS FOLLOWS:
   a. EXHAUST FAN FAILURE: COMMANDED ON, BUT THE STATUS IS OFF.
   b. EXHAUST: COMMANDED OFF, BUT THE STATUS IS ON.

E. ENTHALPY-CONTROL ECONOMIZER:
THE CONTROLLER SHALL MEASURE THE OUTDOOR AIR TEMPERATURE AND HUMIDITY, THE RETURN AIR TEMPERATURE AND HUMIDITY, AND MODULATE THE OUTSIDE AIR, RETURN AIR, AND RELIEF DAMPERS IN SEQUENCE TO MAINTAIN A SETPOINT TWO (2) DEGREES FAHRENHEIT LESS THAN THE COOLING SETPOINT. THE OUTSIDE AIR DAMPERS SHALL MAINTAIN A MINIMUM POSITION OF (20%) OPEN WHENEVER OCCUPIED.

1. THE ECONOMIZER SHALL BE ENABLED WHENEVER:
   a. OUTSIDE AIR TEMPERATURE IS LESS THAN 65 DEGREES FAHRENHEIT-ADJUSTABLE.
   b. AND THE OUTSIDE AIR TEMPERATURE IS LESS THAN THE RETURN AIR TEMPERATURE.
   c. AND THE SUPPLY FAN STATUS IS ON.
2. THE ECONOMIZER SHALL CLOSE WHENEVER:
   a. MIXED AIR TEMPERATURE DROPS FROM 45 DEGREES TO 40 DEGREES-ADJUSTABLE.
   b. OR UPON LOSS OF SUPPLY FAN STATUS
   c. OR THE FREEZESTAT IS ON.
3. THE OUTSIDE AND EXHAUST DAMPERS SHALL CLOSE WHEN THE UNIT IS OFF.

F. RETURN FAN (INTERLOCKED WITH SF-1):
THE RETURN FAN SHALL RUN ANYTIME THE SUPPLY FAN IS COMMANDED TO RUN, UNLESS SHUTDOWN ON SAFETIES. TO PREVENT SHORT CYCLING, THE RETURN FAN SHALL HAVE A USER DEFINABLE (ADJ.) MINIMUM RUNTIME.

1. ALARMS SHALL BE PROVIDED AS FOLLOWS:
   a. RETURN FAN FAILURE: COMMANDED ON, BUT THE STATUS IS OFF.
   b. RETURN FAN IN HAND: COMMANDED OFF, BUT THE STATUS IS ON.

G. ISOLATION ROOM EXHAUST FAN EF-2 (INTERLOCKED WITH AH1-51):
THE EXHAUST FAN SHALL RUN AT ALL TIME, UNLESS SHUTDOWN ON SAFETIES.

1. ALARMS SHALL BE PROVIDED AS FOLLOWS:
   a. EXHAUST FAN FAILURE: COMMANDED ON, BUT THE STATUS IS OFF.
   b. EXHAUST FAN IN HAND: COMMANDED OFF, BUT THE STATUS IS ON.
2. THE AHU SHALL SHUTDOWN AT ANY TIME THAT EXHAUST FAN FAILURE IS EXPERIENCED IN ORDER TO REDUCE EXFILTRATION OF CONTAMINATED AIR FROM THE ISOLATION ROOM.
   a. THE ISOLATION ROOM WILL BE PROVIDED WITH A DIFFERENTIAL PRESSURE SENSOR, CLEARLY MARKED AND LOCATED, THAT INDICATES THAT A MINIMUM OF 0001" OF STATIC PRESSURE DROP IS OBSERVED BETWEEN THE ANTE ROOM AND CORRIDOR, AND BETWEEN THE ISOLATION ROOM AND ANTE CORRIDOR

*PRESSURE SENSOR/MONITOR. INSTALL A MANUAL OVERRIDE ABILITY TO BYPASS PRESSURE SENSOR LOCALLY.

H. PREHEATING COIL STEAM VALVE:
THE STEAM VALVE SHALL OPEN UPON OUTSIDE AIR TEMPERATURE DROP BELOW 50°F (ADJUSTABLE). THE CONTROLLER SHALL MEASURE THE SUPPLY AIR TEMPERATURE AND MODULATE FACE AND BYPASS DAMPERS TO MAINTAIN ITS SETPOINT OF 55°F (ADJ.). THE PREHEATING SHALL BE ENABLED WHENEVER:

1. OUTSIDE AIR TEMPERATURE IS LESS THAN 50°F (ADJ.)
2. AND COOLING IS NOT ACTIVE.
3. AND THE SUPPLY FAN STATUS IS ON.
4. AND THE RETURN FAN STATUS IS ON.

I. THE PREHEATING COIL STEAM VALVE SHALL OPEN FULL AND FBP DAMPERS OPEN FULL FOR FREEZE PROTECTION WHENEVER:

1. INCOMING (OUTSIDE) AIR TEMPERATURE IS LESS THAN 40°F (ADJ.)
2. OR THE FREEZESTAT (IF PRESENT) IS ON.
3. OR LOW SUPPLY TEMPERATURE ALARM IS ON.

J. CHILLED WATER COOLING COIL VALVE:
THE CONTROLLER SHALL MEASURE THE SUPPLY AIR TEMPERATURE AND MODULATE THE CHILLED WATER COOLING COIL VALVE TO MAINTAIN ITS COOLING SETPOINT OF 55°F (ADJ.) WITH PROOF OF CLOSURE.

1. THE CHILLED WATER COOLING SHALL BE ENABLED WHENEVER:
   a. OUTSIDE AIR TEMPERATURE IS GREATER THAN 55°F (ADJ.)
   b. AND THE SUPPLY TEMPERATURE IS ABOVE COOLING SETPOINT.
   c. AND THE SUPPLY FAN STATUS IS ON.
   d. AND THE RETURN FAN STATUS IS ON.
   e. AND THE PRE-HEATING COIL IS NOT ACTIVE.
2. THE COOLING COIL VALVE SHALL OPEN TO 50% (ADJ.) WHENEVER THE FREEZESTAT (IF PRESENT) IS ON.

K. HUMIDIFIER
THE SUPPLY HUMIDITY SENSOR SHALL MODULATE THE STEAM VALVE IN THE UNIT-MOUNTED HUMIDIFIER TO MAINTAIN A RETURN AIR HUMIDITY SETPOINT OF 50% RELATIVE HUMIDITY.

1. THE STEAM HUMIDIFIER SHALL BE ENABLED WHENEVER:
   a. RETURN AIR HUMIDITY IS BELOW 50% RELATIVE HUMIDITY (ADJ.)
   b. AND THE SUPPLY FAN STATUS IS ON.
   c. AND THE INTAKE AND RETURN FAN STATUS IS ON.
2. ALARMS SHALL BE PROVIDED AS FOLLOWS:
   a. HIGH SUPPLY AIR HUMIDITY.

L. MONITOR ONLY POINTS:

1. PRE-FILTER PRESSURE.
2. FINAL FILER PRESSURE AND ALARM.

M. UNIT SHALL STOP FROM:
1. FIRE ALARM SIGNAL (MANUAL RESET)(DICTATED BY DUCT DETECTOR SIGNAL TO FIRE ALARM)
2. LOW LEAVING TEMPERATURE (ALARM FIRST)(MANUAL RESET)
3. HIGH LEAVING HUMIDITY (ALARM FIRST).
4. HIGH LEAVING TEMPERATURE (ALARM FIRST).

JOB: RENOVATE 4S FOR SURGERY
BUILDING: BUILDING 1

SYSTEM: AH1-51

SYSTEM COMPONENT:	POINT ID	ABBREVIATION	POINT LEGEND: DIGITAL/ANALOG/SPACE	SYSTEM OUTPUTS: BINARY	SYSTEM OUTPUTS: ANALOG	SYSTEM INPUTS: BINARY	SYSTEM INPUTS: ANALOG	SYSTEM SOFTWARE/CONTROL: ALARM PROCESSING	SYSTEM SOFTWARE/CONTROL: APPLICATION/FUNCTION	REMARKS
SUPPLY AIR TEMPERATURE	AI-1	SAT					●		●	
SUPPLY AIR HUMIDITY	AI-2	SAH					●		●	
SUPPLY AIR FLOW (CFM)	AI-3	SAF				●	●		●	
SUPPLY STATIC PRESSURE	AI-4	SSP					●		●	
RETURN AIR TEMPERATURE	AI-5	RAT				●			●	
RETURN AIR HUMIDITY	AI-6	RAH				●			●	
RETURN AIR FLOW (CFM)	AI-7	RAF				●			●	
OUTDOOR AIR TEMPERATURE	AI-8	OAT				●			●	
OUTDOOR AIR HUMIDITY	AI-9	OAH				●			●	
OUTDOOR AIR FLOW (CFM)	AI-10	OAF				●			●	
MIXED AIR TEMPERATURE	AI-11	MAT				●			●	
PREHEAT TEMPERATURE	AI-12	PHT				●			●	
RETURN FAN INDICATOR	AI-13	RFI					●		●	
RETURN AIR CARBON DIOXIDE	AI-14	RACO2					●		●	
PRE-FILTER PRESSURE LOSS	AI-15	PFIL				●			●	
AFTER FILTER PRESSURE LOSS	AI-16	AFIL				●			●	
EXHAUST FAN INDICATOR	AI-17	EFI					●		●	
SUPPLY FAN STATUS	BI-1	SF-STS		●			●		●	
RETURN FAN STATUS	BI-2	RF-STS		●			●		●	
SUPPLY FAN ALARM FAULT	BI-3	SF-ALRM		●			●			
RETURN FAN ALARM FAULT	BI-4	RF-ALRM		●			●			
SUPPLY AIR SMOKE DETECTOR	BI-5	SSD		●			●			
SUPPLY AIR HIGH STATIC PRESSURE	BI-6	SHSP		●		●				
RETURN AIR LOW STATIC PRESSURE	BI-7	RLSP		●		●				
LOW LEAVING AIR TEMPERATURE	BI-8	LLT		●		●				
HIGH LEAVING AIR TEMPERATURE	BI-9	HLT		●		●				
HUMIDITY HIGH LIMIT	BI-10	HHL		●		●				
HEATING COIL STATUS	BI-11	HCS		●						
COOLING COIL STATUS	BI-12	CCS		●						
EXHAUST FAN STATUS	BI-13	EF-STS		●						
EXHAUST FAN ALARM FAULT	BI-14	EF-ALRM		●						
PRE-HEAT VALVE V-2	AO-1	HCV			●					
COOLING COIL VALVE V-1	AO-2	CCV			●					
HUMIDIFIER VALVE	AO-3	HUMV			●					
RETURN FAN VFD SPEED CONTROL	AO-4	RF-VFD			●					
SUPPLY FAN VFD SPEED CONTROL	AO-5	SF-VFD			●					
RETURN AIR DAMPER POSITION	AO-6	RAD-POS								
RELIEF (EXHAUST) AIR DAMPER POSITION	AO-7	EAD-POS								
OUTSIDE AIR DAMPER POSITION	AO-8	OAD-POS								
SUPPLY FAN START/STOP	BO-1	SF-SST	●						●	
RETURN FAN START/STOP	BO-2	RF-SST	●						●	
EXHAUST FAN START/STOP	BO-3	EF-SST	●						●	

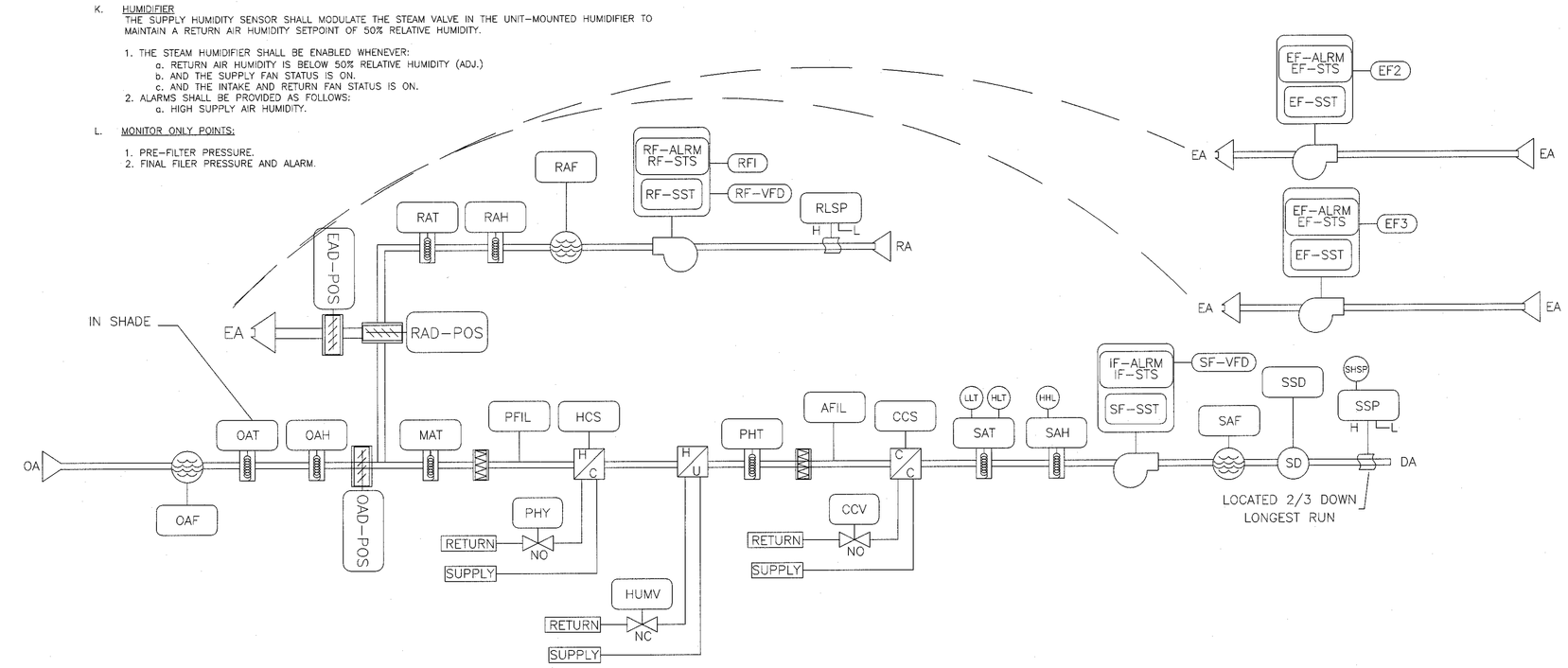

SYSTEM: AH1-51

FULLY SPRINKLERED BUILDING
BID DOCUMENTS

Revisions:	Date

CONSULTANTS:

STATE OF WISCONSIN — KERRY LEE PICKETT 36602-006 — REGISTERED PROFESSIONAL ENGINEER — 7/9/12

ARCHITECT/ENGINEERS:

PARADIGM
ENGINEERS AND CONSTRUCTORS
PO BOX 436223 Louisville, Kentucky 40253 – PH: 502.339.8511 – www.paradigmusa.com

STATE OF KENTUCKY — BLAINE CAMIEL VAN GANSBEKE 24,788 — LICENSED PROFESSIONAL ENGINEER — 7/9/12

Drawing Title: CONTROLS SCHEDULES

Approved: Project Director

Project Title: SURGICAL SUPPORT AND LOCKERS

Location: IOWA CITY VAMC
601 HIGHWAY 6 WEST, IOWA CITY, IOWA 52246-2208

Date: 07-13-12 | Checked: KLP | Drawn: JEM

Project Number: 636A8-11-011

Building Number: 1

Drawing Number: 1-H12

Office of Construction and Facilities Management
Department of Veterans Affairs

VA FORM 08-6231