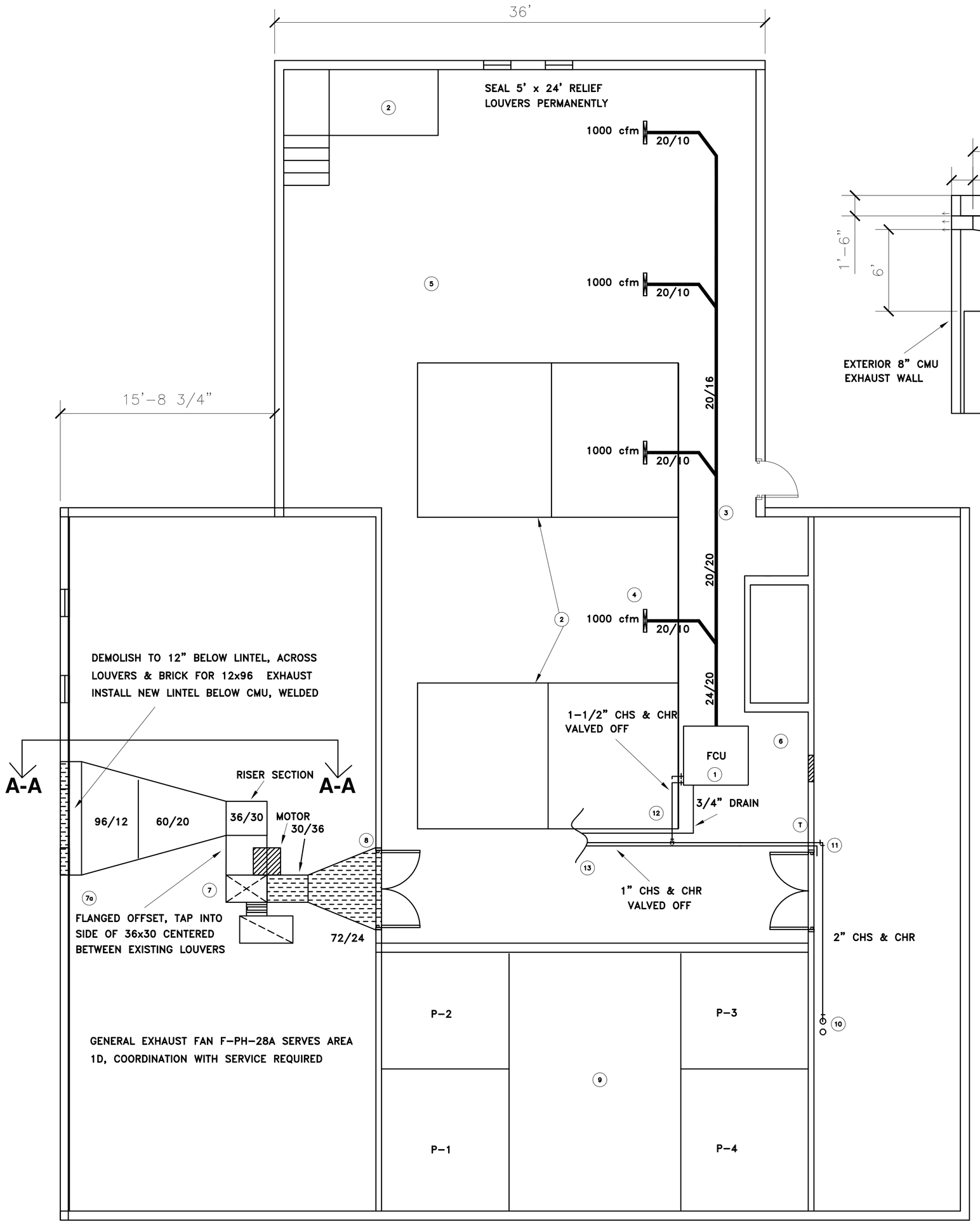

1 / M1 KEYED LAYOUT

Scale: 1/4" = 1'-0"

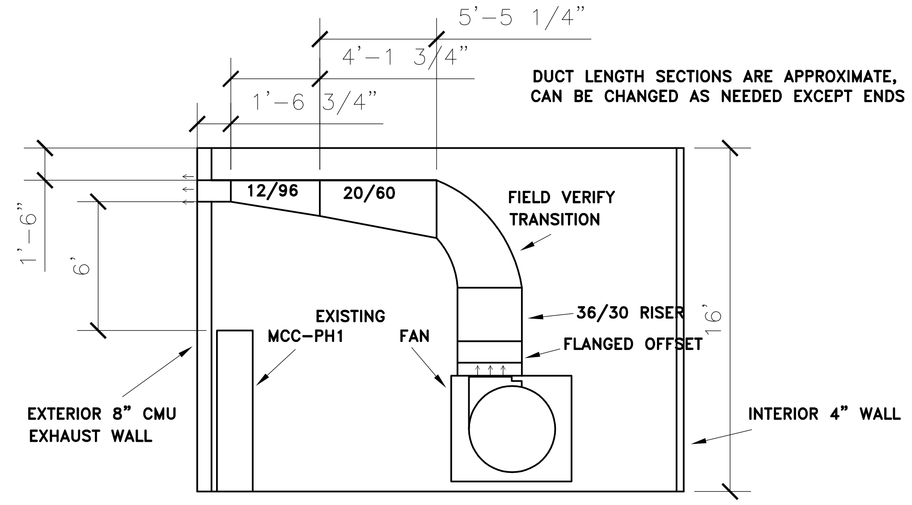

SECTION A-A

Scale: 1/4" = 1'-0"

GENERAL NOTES

1. CONTRACTOR SHALL VISIT THE PROJECT SITE TO VERIFY ALL CONDITIONS AND DIMENSIONS PERTINENT TO THE PROJECT SITE, PRIOR TO SUBMITTING A "BID".
2. CONTRACTOR SHALL PREPARE AND PROVIDE A "PHASING PLAN" OUTLINING HOW HE INTENDS TO ACCOMPLISH THE WORK IN THE SPECIFIED AREA OF SITE, BUILDING OR PORTION THEREOF.
3. CONTRACTOR SHALL EXECUTE WORK SO AS TO INTERFERE AS LITTLE AS POSSIBLE WITH THE NORMAL FUNCTIONS OF THIS HOSPITAL AS A WHOLE INCLUDING THE OPERATION OF UTILITY SERVICES, FIRE PROTECTION SYSTEMS AND ANY EXISTING EQUIPMENT, AND WORK BEING DONE BY OTHERS.
4. CONTRACTOR SHALL CLEANUP GENERAL AREA THROUGH OUT. FLOORS, WALLS, PENTHOUSE AREA, ROOF AND WALKWAYS, STAIRS AND ANY OTHER AREAS AFFECTED BY CONSTRUCTION.
5. CONTRACTOR SHALL TEST AND BALANCE A/C SUPPLY AND SEAL PER INDUSTRY STANDARDS AND PROCEDURES FOR MORE QUITTER AND EFFICIENT SYSTEM.
6. CONTRACTOR SHALL PATCH / REPAIR TO MATCH EXISTING LEVELS AND FINISHES AFTER THE REMOVAL OF ANY PLUMBING, ELECTRICAL AND ANY OTHER ITEMS FROM WALLS, ALL FIRE PENETRATIONS SHALL BE SEALED.
7. CONTRACTOR SHALL COORDINATE CONSTRUCTION WITH RESIDENT ENGINEER AT AUDIE L. MURPHY MEMORIAL VETERANS HOSPITAL.

KEY NOTES

1. SUSPEND AHU FROM DECK WITH VIBRATION ISOLATORS & UNISTRUT PER INDUSTRY STANDARDS, COOLING ONLY, YORK 120YSHW, 57 x 52 x 32, 490lbs, 1 3/8" MANIFOLDS/21 GPM, 1 1/2 hp HI-EFF MOTOR 230/480/3 ph or equal
2. EXISTING RAISED PLATFORMS CONTAINING ELEVATOR MECHANICAL/ELECTRICAL EQUIPMENT, 5' HIGH W/RAILING MECHANICAL WORK DOES NOT INCLUDE THIS AREA OTHER THAN COOLING
3. CONSTRUCT ALL DUCT DOWNSTREAM OF AHU TO BE SMACNA MEDIUM PRESSURE, 2" CLASSIFICATION, LEVEL WITH AHU, GALVANIZED STEEL, 26ga MIN., INSULATED WITH 2" FOIL BACKED WRAP; 48 x 30 RETURN AIR SIDE OPEN TO SPACE
4. TITUS MODEL 250 RECTANGULAR WALL DIFFUSER, WHITE/1-WAY/20 x 10 NECK/42 NC or equal
5. HANG R-19 MINIMUM POLY-ENCAPSULATED FORMALDEHYDE-FREE THERMAL FIBER GLASS INSULATION WITH CHICKEN WIRE ON CEILING DECK; SIMILIAR TO JOHNS-MANVILLE COMFORTTHERM OR APPROVED EQUAL
6. CONTRACTOR TO FIELD VERIFY ALL CLEARANCES, SUSPEND UNIT BETWEEN LIGHT AND BELOW SPRINKLER LINE TO ALLOW MINIMUM DISRUPTION TO SERVICES; 230/3ph PANEL BELOW UNIT BY FAN ROOM ENTRY HAS SPARE CAPACITY
7. REMOVE DASHED DUCTS, ROTATE 30 x 36 180 DEGREES, ATTACH TO SUPPLY WITH OFFSET, PROVIDE SECTIONS SUCH THAT BOTTOM OF DUCT TRANSITIONS AND WALL OPENING ARE 6' MIN ABOVE MOTOR CONTROL CENTER

7a. PRIOR TO ATTACHING 12 x 96 DUCT TO WALL OPENING RELOCATE CONTROL CONDUITS TO F-PH-9A FOR ACCESS, RELOCATE PLATFORM LADDER TO FACE SIDE OF CATWALK THEN INSTALL NEW DUCT 6' MIN. OVER MOTOR CONTROL CENTER PH-1, WORK MUST CONFORM TO NFPA 70

8. AFTER MODIFICATION AND RELOCATION OF DUCTS SEAL 24 x 72 WALL OPENING TO MATCH, RELOCATE 3/4" DRAIN SERVING 3 TON FAN COIL UNIT FOR CLEARANCE OF EXHAUST RISER
9. AREA FOR P-1 TO P-4 COOLED BY 3 TON, NO WORK NECESSARY EXCEPT SHUTDOWN COORDINATION
10. INSTALL DIE-ELECTRIC FITTING AND EXTEND 2" STEEL CHS/CHR AS 2" COPPER RISERS AFTER EXISTING VALVE, ROUTE NEXT TO EXISTING 1" LINES TO BE DEMOLISHED AFTER FINAL CONNECTIONS ARE MADE
11. ROUTE LINES THROUGH WALL, FIRESTOP, INSTALL NEW 2" AIR VENTS AND RECONNECT CONTROL MONITORS
12. INSTALL 2" x 1-1/2" x 1" TEE, ROUTE 1 1/2" TO NEW FCU, INSULATE AND SEAL ALL LINES
13. EXTEND 1" CHS & CHR LINES 2' PASS TEE, FINAL CONNECT TO EXISTING 1" LINES SERVING 3 TON FCU CONNECT NEW 3/4" CU TRAPPED DRAIN TO EXISTING LINE THAT SERVES 3 TON FCU, INSULATE

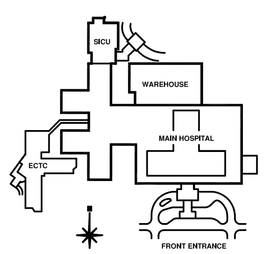

KEY PLAN

Revisions	Date

NOTE: THE RESIDENT ENGINEER MUST BE NOTIFIED 24 HOURS IN ADVANCE OF ANY COMPROMISE IN THE FIRE SUPPRESSION OR SMOKE DETECTION SYSTEMS. A COPY OF THE INTERIM LIFE SAFETY MEASURED MUST BE OBTAINED AND FOLLOWED DURING CONSTRUCTION

Concur M & O	Approved: Service Chief
Concur Bio-Med	Approved: Service Chief
Concur Safety	Approved: Service Chief
Approved: Service Chief	Approved: Service Chief
Approved: Service Chief	Approved: Chief of Staff

Drawing Title: PLAN LAYOUT A/C PENTHOUSE "A"

Approved: Chief of Engineering

Approved: Associate Director

Project Title: REPLACE ELEVATOR CONTROLS-AD

Building Number | Checked: R.M. | Drawing: E.G.

Location: Audie L. Murphy Memorial Veterans Hospital San Antonio, Texas

Date

Project No. 671-07-106

DRAWING NO. M-1

Dwg X Of X

Office Of Facilities

Department of Veterans Affairs