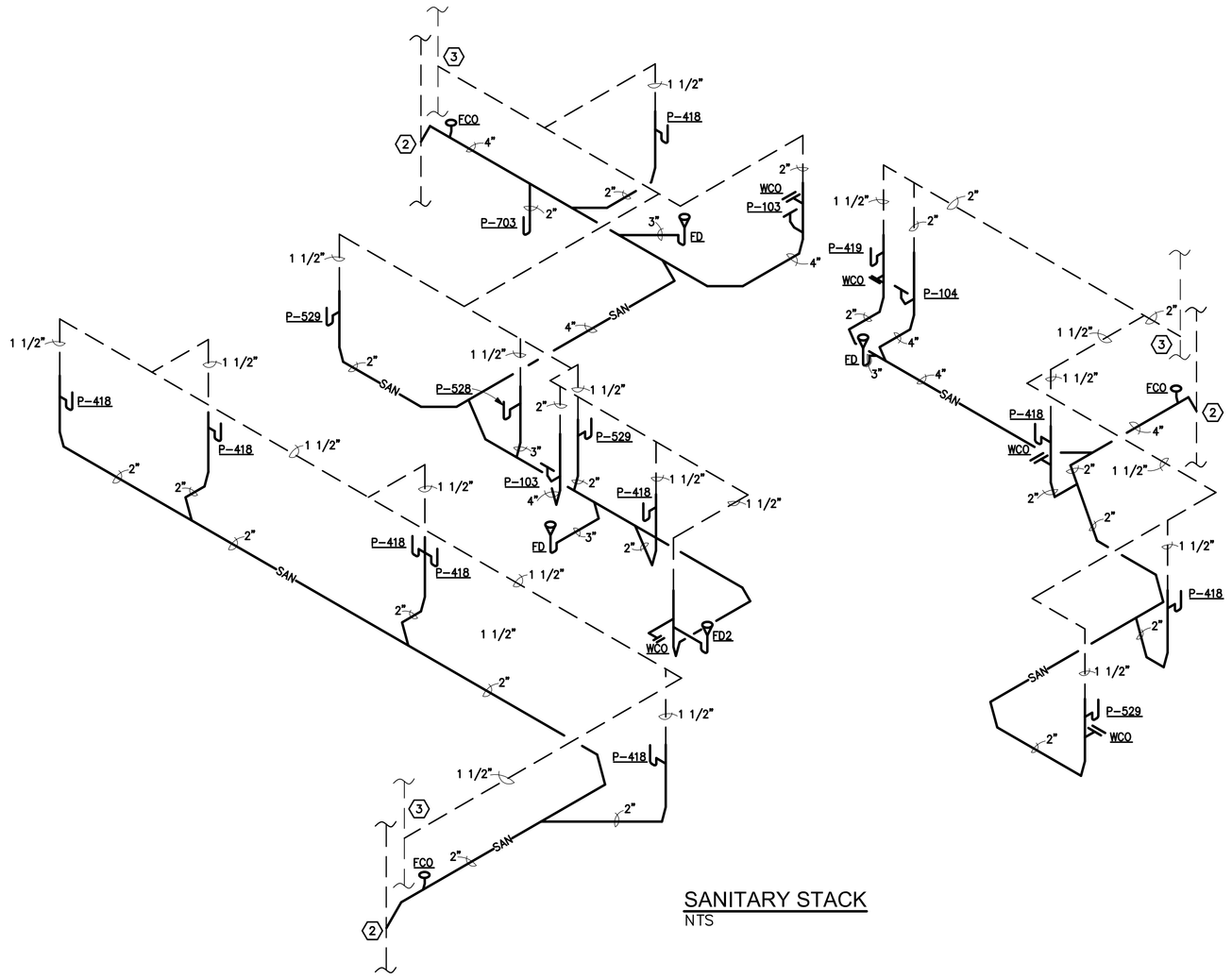

SANITARY STACK
NTS

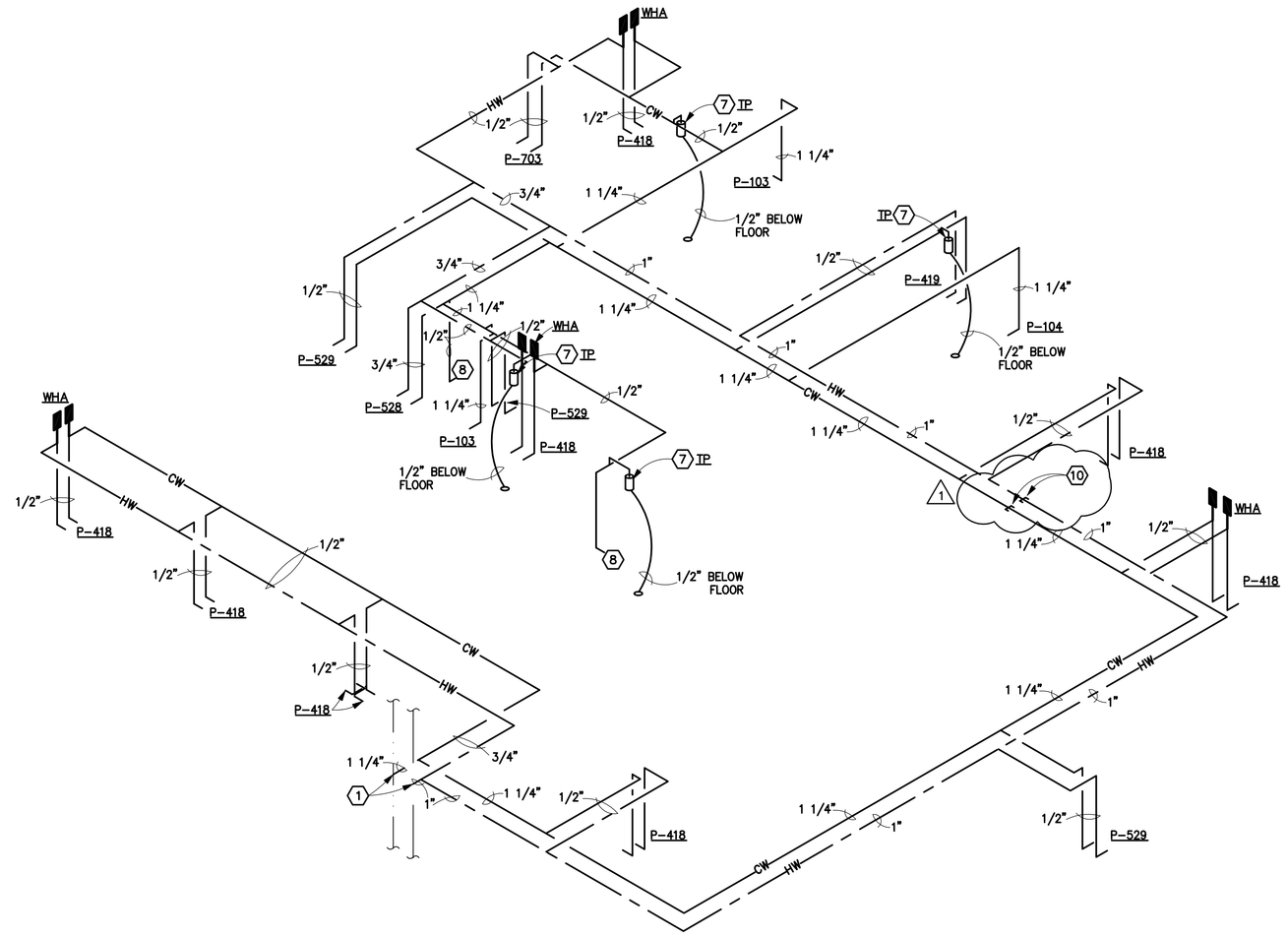

WATER RISER
NTS

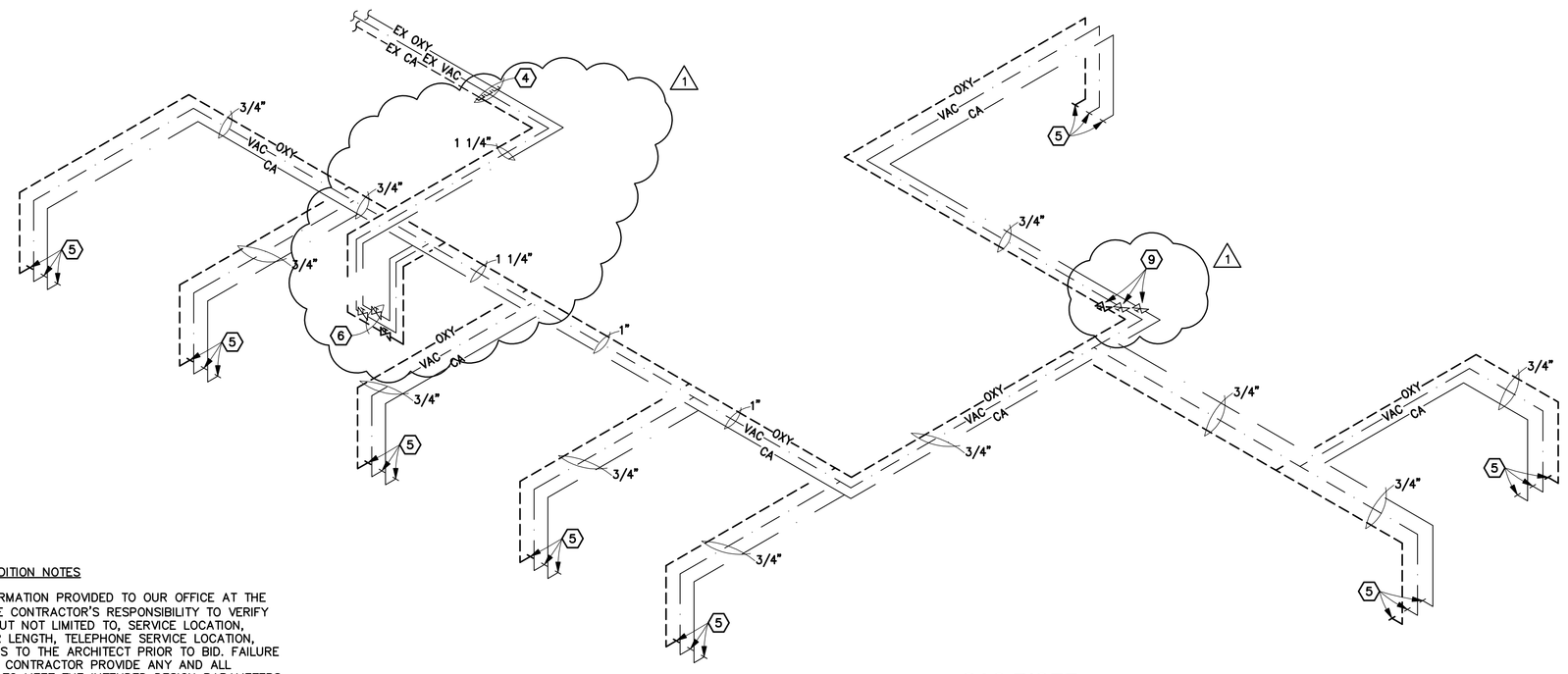

GAS RISER
NTS

SEE SHEET P1 FOR CODED NOTES

DEMOLITION NOTES:
FOR ALL PLUMBING FIXTURES THAT ARE TO BE REUSED REMOVED:

- REMOVE ALL SANITARY LINES TO BELOW THE FLOOR AND CAP-OFF CONNECTION POINT.
- REMOVE ALL VENT LINES TO ABOVE THE CEILING AND CAP-OFF CONNECTION POINT.
- REMOVE ALL HOT AND COLD DOMESTIC WATER LINES TO ABOVE THE CEILING AND/OR BELOW THE FLOOR AND CAP-OFF CONNECTION POINT.

SEE ARCHITECTURAL DEMOLITION PLAN FOR AFFECTED AREAS AND ADDITIONAL NOTES.

PIPING LEGEND

CW	COLD WATER WITH SHUT OFF VALVE
EX CW	EXISTING COLD WATER
HW	HOT WATER WITH SHUT OFF VALVE
EX HW	EXISTING HOT WATER
EX V	EXISTING SANITARY VENT
V	SANITARY VENT
EX SAN	EXISTING SANITARY
SAN	SANITARY
OXY	OXYGEN WITH SHUT OFF VALVE
EX OXY	EXISTING OXYGEN
VAC	VACUUM WITH SHUT OFF VALVE
EX VAC	EXISTING VACUUM
CA	COMPRESSED AIR WITH SHUT OFF VALVE
EX CA	EXISTING COMPRESSED AIR

EXISTING CONDITION NOTES

THESE DRAWINGS ARE BASED ON INFORMATION PROVIDED TO OUR OFFICE AT THE TIME OF DESIGN. THEREFORE, IT IS THE CONTRACTOR'S RESPONSIBILITY TO VERIFY ALL EXISTING CONDITIONS INCLUDING BUT NOT LIMITED TO, SERVICE LOCATION, SERVICE LAYOUTS, SECONDARY FEEDER LENGTH, TELEPHONE SERVICE LOCATION, ETC... AND REPORT ANY DISCREPANCIES TO THE ARCHITECT PRIOR TO BID. FAILURE TO DO SO MAY CONSTITUTE THAT THE CONTRACTOR PROVIDE ANY AND ALL ADDITIONAL EQUIPMENT, LABOR, ETC... TO MEET THE INTENDED DESIGN PARAMETERS.

VERIFY ALL CONDITIONS IN FIELD

GENERAL CONTRACTOR TO FIELD VERIFY ALL EXISTING CONDITIONS

REVISION 1	5/21/09
Revisions:	Date

CONSULTANTS:

CDL
Collaborative Design, Ltd.
Architects/Engineers
2727 Tuller Parkway Suite 200
Dublin, Ohio 43017
Tel 614.798.1515 Fax 614.798.5105

FULLY SPRINKLERED

CDL Project Number: 07060

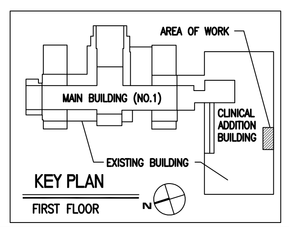

KEY PLAN
FIRST FLOOR

Drawing Title: PLUMBING ISOMETRICS	Project Title: EMERGENCY ROOM RENOVATION		Project Number: 540-07-115
Approved: Project Director	Location: VAMC - CLARKSBURG, WV		Building Number: ONE
	Date: 6/20/2008	Checked: LL / Drawn: JS	Drawing Number: P2 Dwg. of --

Office of Facilities Management

Department of Veterans Affairs