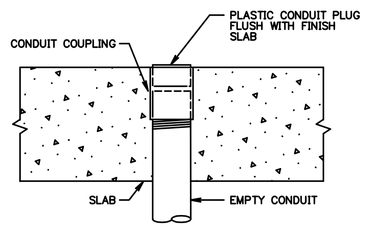

1 CONDUIT STUB UP
NO SCALE

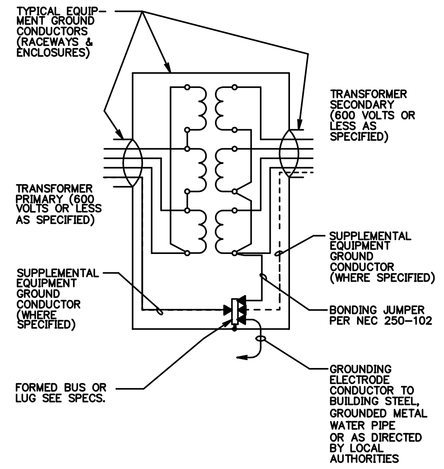

2 SEPARATELY DERIVED ELECTRICAL SYSTEMS GROUNDING
NO SCALE

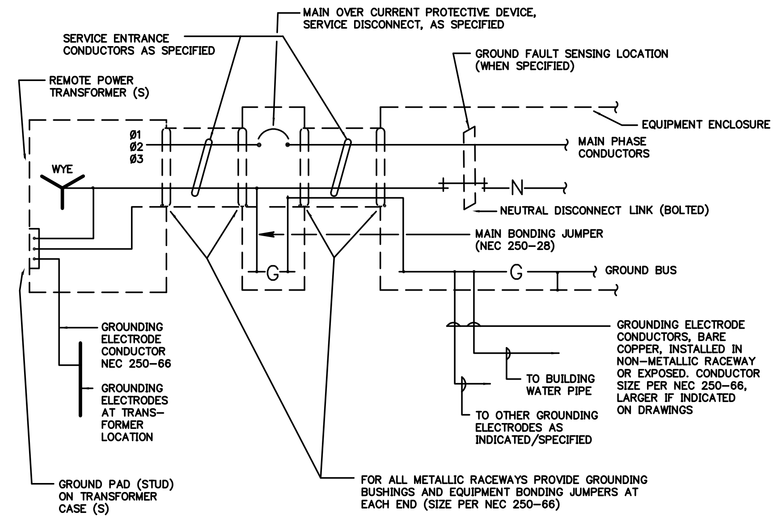

3 GROUNDING-LOW VOLTAGE SERVICE, SINGLE MAIN REMOTE TRANSFORMER
NO SCALE

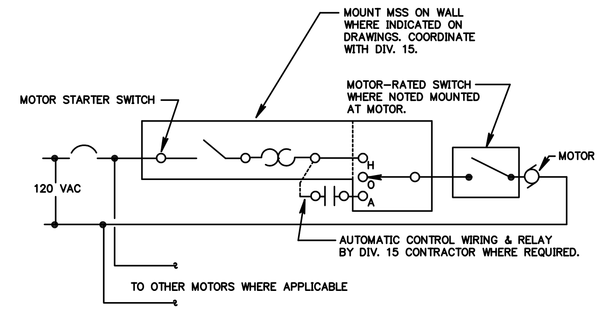

4 TYPICAL 120V MOTOR WIRING DIAGRAM
NO SCALE

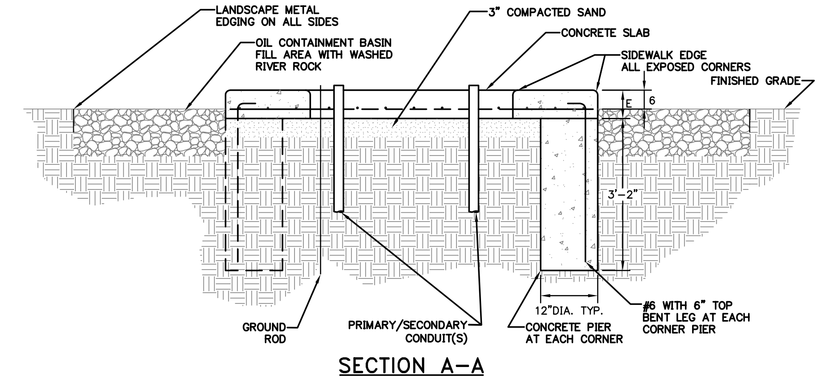

SECTION A-A

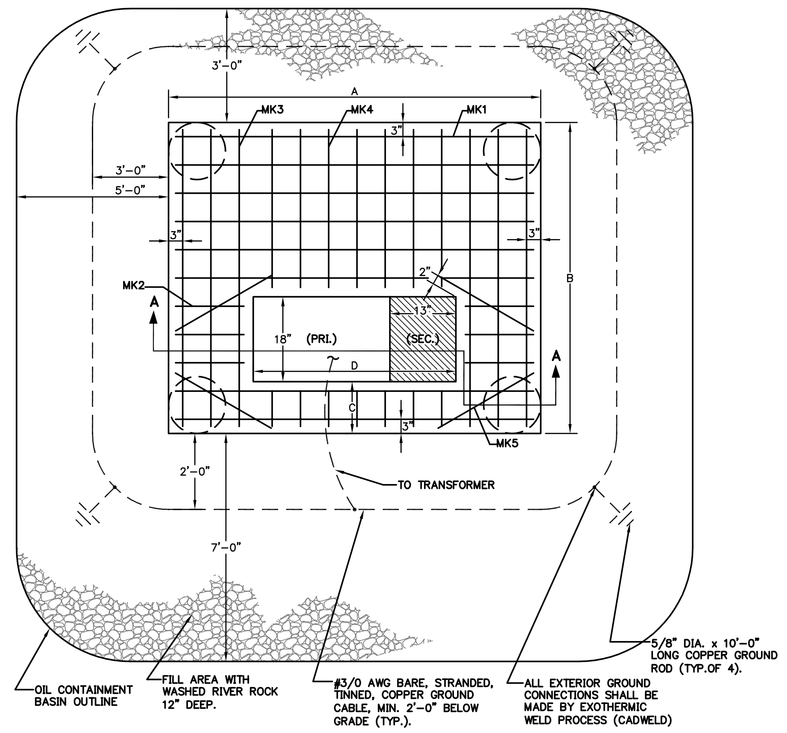

PLAN VIEW

GENERAL NOTES:

1. CONCRETE TESTING: 3000 LBS. MIN. PER SQ. INCH; 4% TO 6% ENTRAINED AIR, 3/4" MAXIMUM SIZE AGGREGATE.
2. REINFORCING STEEL: ASTM-A615 GRADE 60, PLACE APPROX. 6" O.C. EACH WAY AND SECURELY TIED TOGETHER.
3. MINIMUM CONCRETE COVER OVER REINFORCING STEEL 2" UNLESS OTHERWISE NOTED.
4. WOOD FLOAT FINISH, LEAVING NO DEPRESSIONS.

3-PHASE TRANSFORMER KVA	PAD DIMENSIONS					REINFORCING BARS				
	A	B	C	D	E	MK1	MK2	MK3	MK4	MK5
75, 112-1/2, 150, 225, 300, 500	6'-4"	5'-2"	10"	3'-6"	9"	7#4 70"	4#4 10"	6#4 57"	6#4 28"	4#4 26"
750, 1000, 1500, 2000	8'-10"	9'-4"	10"	4'-6"	9"	12#4 98"	6#4 19"	6#4 94"	7#4 66"	4#4 22"

13 TRANSFORMER PAD DETAIL
NO SCALE

ELECTRICAL NOTES FOR TYPICAL ELEVATOR DETAIL:

1. SMOKE DETECTORS IN LOBBIES AND EQUIPMENT ROOM FOR ELEVATOR RECALL.
2. THERMAL DETECTOR IN ELEVATOR SHAFT, PIT, AND EQUIPMENT ROOM FOR POWER DISCONNECT. (WHERE ELEVATOR SHAFT IS SPRINKLED).
3. FUSED SWITCH FOR ELEVATOR EQUIPMENT IN EQUIPMENT ROOM.
4. CONTROL INTERCONNECTION BETWEEN ELEVATOR EQUIPMENT CONTROL AND TRANSFER SWITCH FOR TEST COORDINATION AND TRANSFERS.
5. SMOKE DETECTOR IN ELEVATOR SHAFT FOR ELEVATOR RECALL. (WHERE ELEVATOR SHAFT IS SPRINKLED).

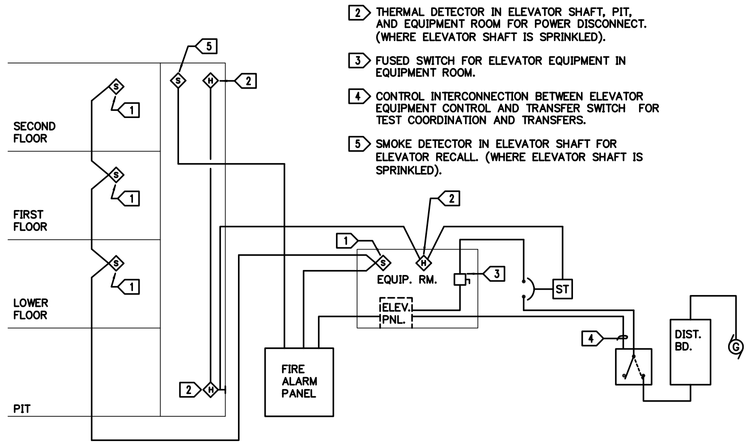

5 TYPICAL ELEVATOR DETAIL
NO SCALE

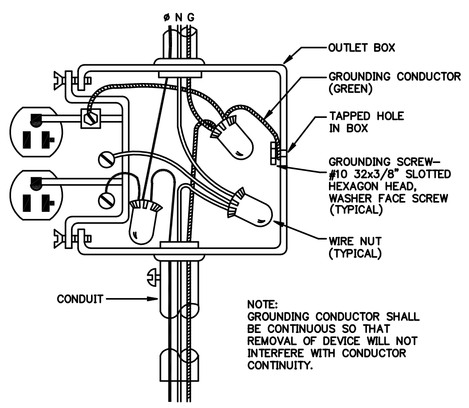

NOTE:
GROUNDING CONDUCTOR SHALL BE CONTINUOUS SO THAT REMOVAL OF DEVICE WILL NOT INTERFERE WITH CONDUCTOR CONTINUITY.

6 RECEPTACLE WIRING DETAIL
NO SCALE

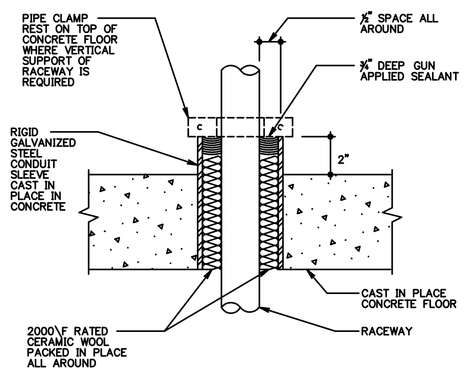

7 CAST-IN PLACE SLEEVE FOR RACEWAY OR ELECTRICAL CABLES (WET OR DRY LOCATIONS)
NO SCALE

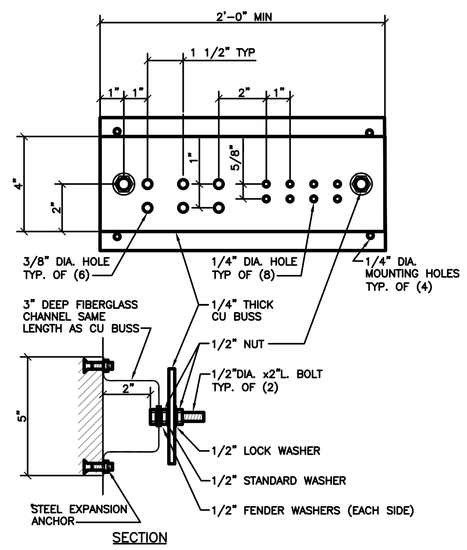

GENERAL NOTES
1. ALL HARDWARE SHOWN SHALL BE STAINLESS STEEL.
2. PROVIDE 1 MOUNTING POINT PER 12" OF BAR LENGTH.
3. HOLES MAY BE ADDED IF REQUIRED.

8 GROUNDING BAR DETAIL
NO SCALE

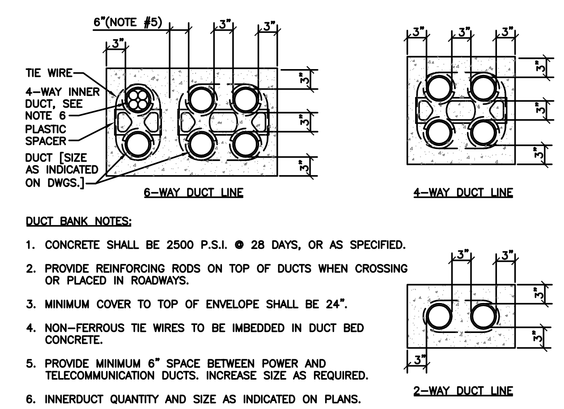

DUCT BANK NOTES:
1. CONCRETE SHALL BE 2500 P.S.I. @ 28 DAYS, OR AS SPECIFIED.
2. PROVIDE REINFORCING RODS ON TOP OF DUCTS WHEN CROSSING OR PLACED IN ROADWAYS.
3. MINIMUM COVER TO TOP OF ENVELOPE SHALL BE 24".
4. NON-FERROUS TIE WIRES TO BE IMBEDDED IN DUCT BED CONCRETE.
5. PROVIDE MINIMUM 6" SPACE BETWEEN POWER AND TELECOMMUNICATION DUCTS. INCREASE SIZE AS REQUIRED.
6. INNERDUCT QUANTITY AND SIZE AS INDICATED ON PLANS.

9 DUCT BANK DETAILS
NO SCALE

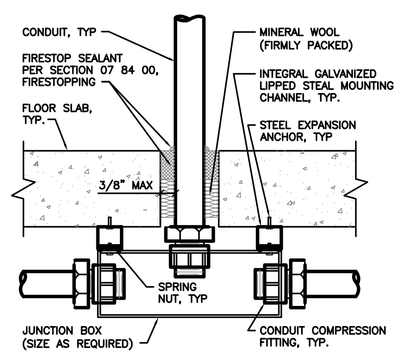

10 FLOOR SLAB PENETRATION DETAIL
NO SCALE

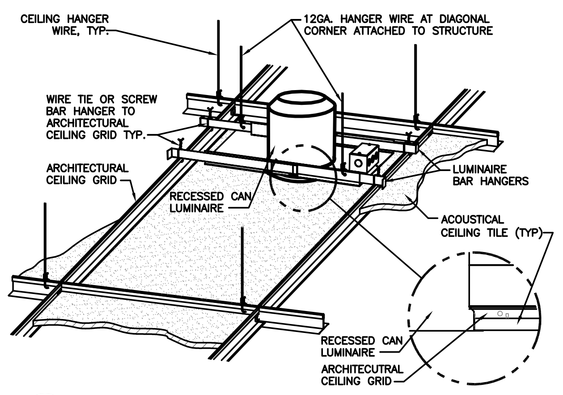

11 DOWNLIGHT MOUNTING
NO SCALE

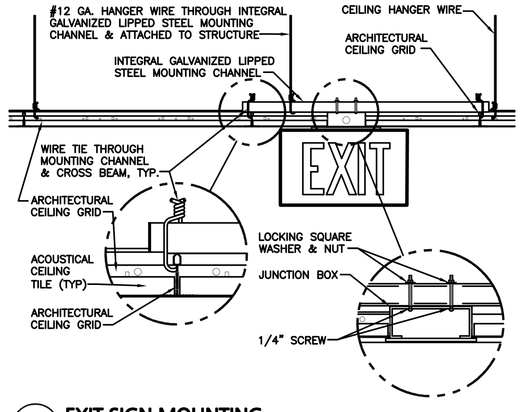

12 EXIT SIGN MOUNTING
NO SCALE

100%-FINAL-NOT FOR CONSTRUCTION
FULLY SPRINKLERED

Revision Schedule	
Revision Number	Revision Date

CONSULTANTS:

CIVIL/LANDSCAPE/SURVEYOR	FIRE PROTECTION
SAYRE ASSOCIATES	FP&C
216 South Duluth Ave Sioux Falls, SD 57104	1520 Main Street Indianapolis, IN 46224
t: 605-332-7211 f: 605-332-7222	t: 317-468-5188 f: 317-486-5189

ARCHITECT/ENGINEERS/COST ESTIMATORS:

ELLERBE BECKET
800 LaSalle Avenue, Suite 250
Minneapolis, MN 55402
612-376-2000

Ellerbe Becket, Inc.
Ellerbe Becket Architects and Engineers, Inc.
Ellerbe Becket Architects and Engineers
2009

Drawing Title: ELECTRICAL DETAILS	Project Title: CONSTRUCT SURGICAL SUITE		Project Number 438-363ES
Approved: Project Director	Location SIOUX FALLS, SD		Building Number 5
	Date 05/14/10	Checked D.R.	Drawn L.F.
			Drawing Number 5-E501
			Dwg. 187 of 194

Construction & Facilities Management CFM
Department of Veterans Affairs