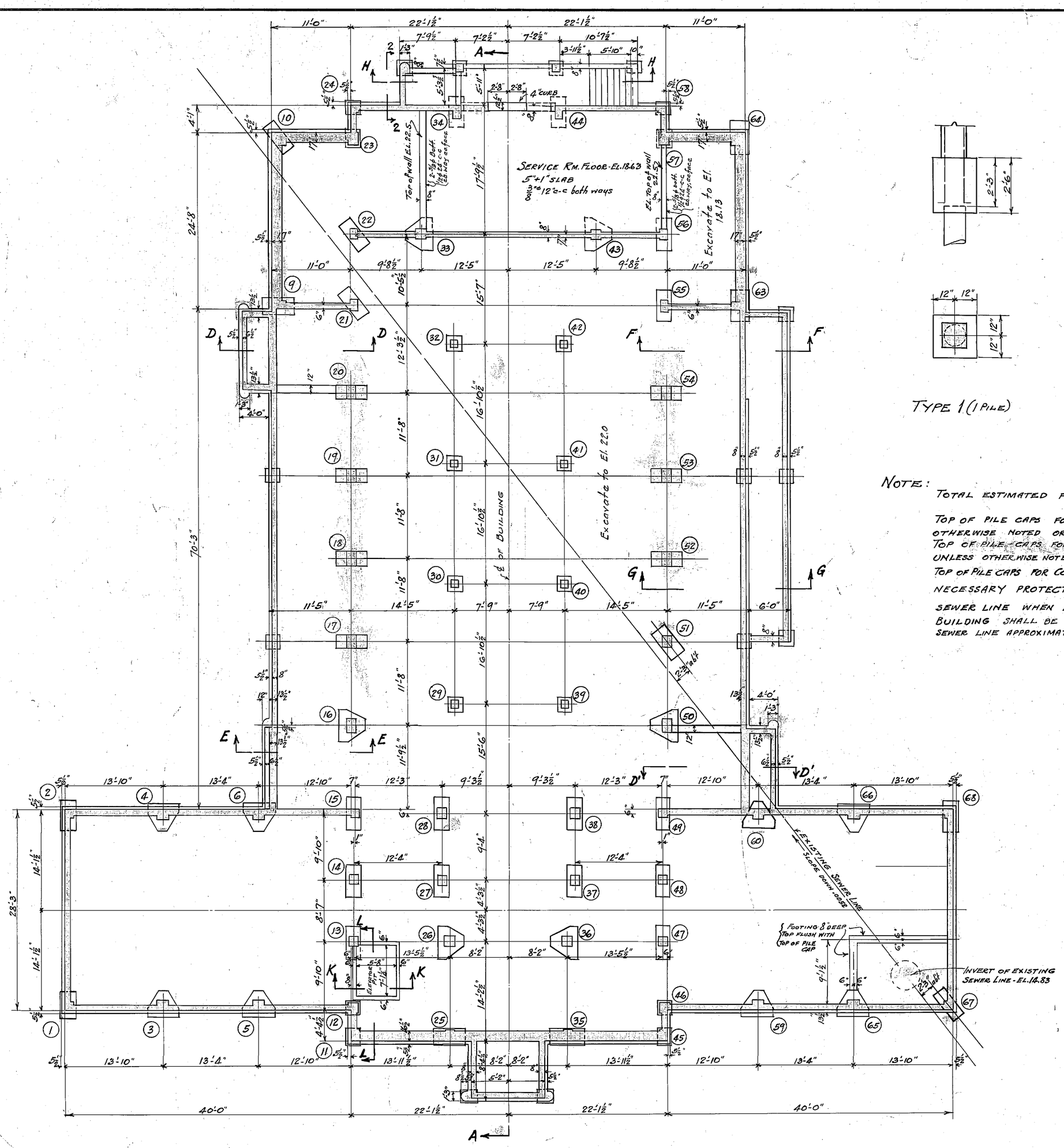

FOUNDATION PLAN

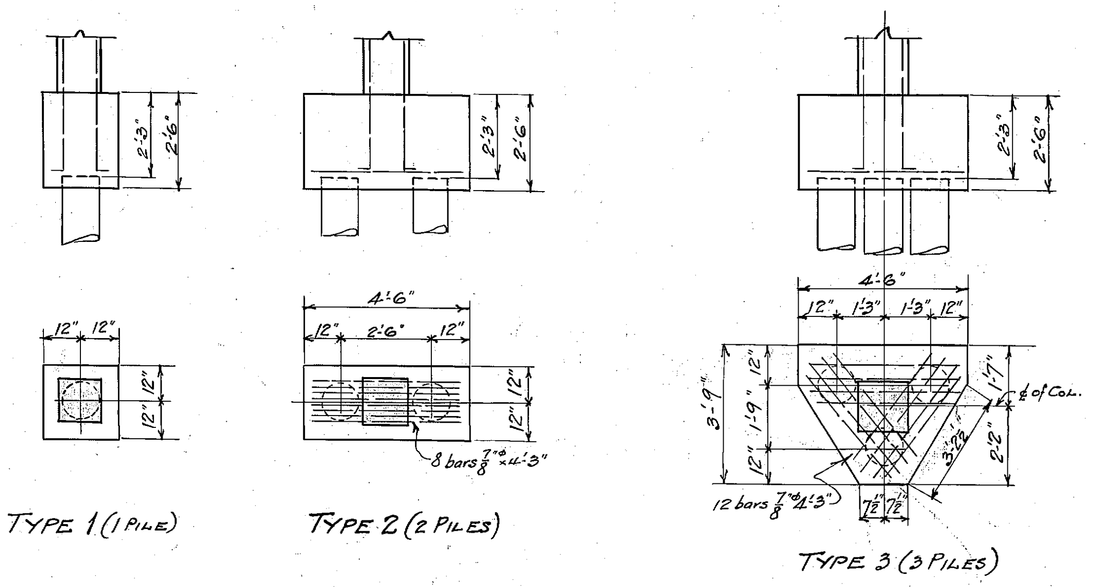

NOTE:

TOTAL ESTIMATED FOOTAGE OF PILING: WOOD SECTION, 5560 lin. ft.
CONCRETE " , 3336 " "

TOP OF PILE CAPS FOR INTERIOR COLUMNS, UNLESS OTHERWISE NOTED OR SHOWN, TO BE EL. 22.0

TOP OF PILE CAPS FOR EXTERIOR COLUMNS AND WALLS, UNLESS OTHERWISE NOTED OR SHOWN, TO BE EL. 21.5

TOP OF PILE CAPS FOR COLUMNS 24, 33, 34, 43, 44, 55, 56, 57, 58, 63 + 64 TO BE EL. 17.46

NECESSARY PROTECTION MUST BE PROVIDED FOR SAFETY OF EXISTING SEWER LINE WHEN DRIVING PILES FOR NEARBY COLUMNS.

BUILDING SHALL BE COORDINATED WITH RESPECT TO THE SEWER LINE APPROXIMATELY AS SHOWN.

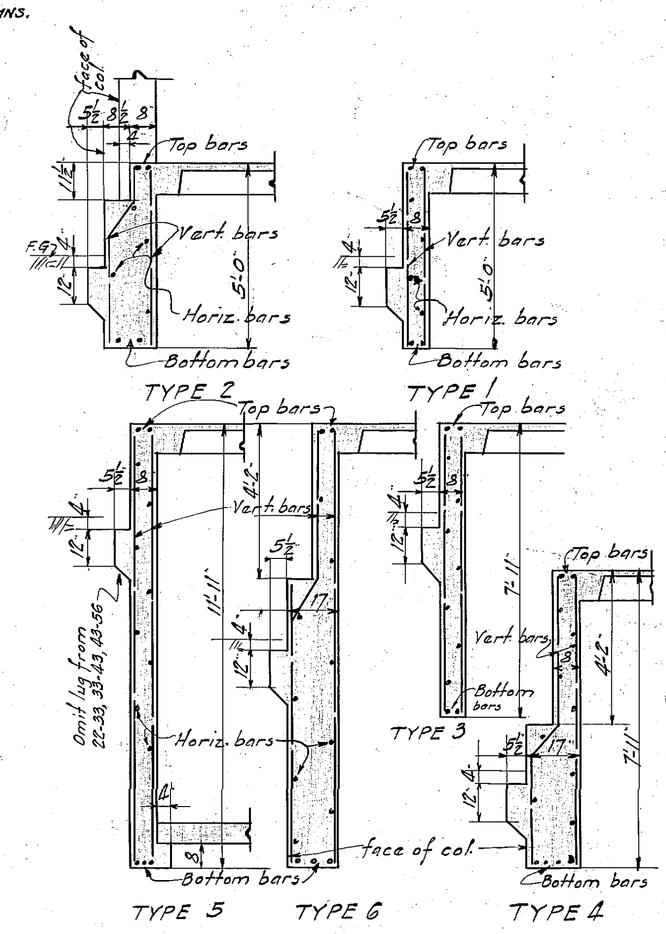

BETWEEN COLS:-	b	d	Top Bars	Bottom Bars	Vert Bars Size & Spacing	Horiz. Bars Size & Spacing
TYPE 1						
1-3, 3-5, 5-12, 2-4, 4-6, 46-59, 59-65, 65-67, 60-66, 66-68	8"	5'-0"	2-5/8	2-3/4	1/2 ϕ 24" c-c	1/2 ϕ 24" c-c
1-2, 67-68	8"	5'-0"	2-1 5/8	2-1 5/8	do	do
6-15, 11-12, 45-46, 49-60	8"	5'-0"	2-5/8	2-5/8	do	do
TYPE 2						
11-25, 25-35, 35-45	8"+16½"	5'-0"	2-3/4	2-3/4	1/2 ϕ 12" c-c	1/2 ϕ 12" c-c
TYPE 3						
9-21, 23-24, 22-33	8"	7'-11"	2-5/8	2-5/8	1/2 ϕ 24" c-c	1/2 ϕ 24" c-c
TYPE 4						
9-10	8"+17"	7'-11"	2-3/4	2-3/4	1/2 ϕ 24" c-c	1/2 ϕ 24" c-c
10-23	8"+17"	7'-11"	2-5/8	3-5/8	do	do
TYPE 5						
24-34, 43-56, 44-58	8"	11'-11"	2-5/8	2-5/8	1/2 ϕ 24" c-c	1/2 ϕ 24" c-c
33-43	8"	11'-11"	2-5/8	3-7/8	do	do
55-63, 57-58	8"	11'-11"	2-5/8	2-3/4	do	do
TYPE 6						
57-64	8"+17"	11'-11"	2-5/8 ϕ	2-3/4	1/2 ϕ 24" c-c	1/2 ϕ 24" c-c
63-64	8"+17"	11'-11"	2-5/8	2-1	do	do

VETERANS ADMINISTRATION
WASHINGTON, D. C.

APPROVED Frank T. Hines
ADMINISTRATOR

George B. Zinn
ASSISTANT ADMINISTRATOR

DIRECTOR OF CONSTRUCTION

CHIEF, TECHNICAL DIVISION

2-4-2-0963

RECREATION BUILDING No. 17
VETERANS ADMINISTRATION FACILITY
BILOXI, MISS. 2-4-2-0963

	REVISIONS	NUMBER
Drawn H.		17-13
Traced H.		
Sect. Chf. Hurd.		
Date Dec. 20, 1933		SHEET 13 OF 29
Sub-Division Chief John McKee		Proj. No. 667

RETURN TRACINGS TO PLAN FILES

FILE FOLDER NO. 4

STROUT 14