COLUMN SCHEDULE

MARK	FOOTING TYPE NO.	SUPPORTING FIRST FLOOR	SUPPORTING SECOND FLOOR	SUPPORTING SECOND FL. CEILING	SUPP. FLY LOFT CEILING
1-2-67-68	2	15×15 4-1□	12×12 4-5/8	12×12 4-5/8	
3-4-5 59-65-66	3	18×18 8-1□	16×18 6-1□	16×18 6-1□	
6-60	3	18×20 8-1□	16×18 6-1□	16×18 6-1□	
9	2	14×14 to 23 ⊗ 4-1	12×12 4-5/8	12×12 4-5/8	
10	2	14×14 to 23×23 ⊗ 4-1□	12×12 4-5/8	12×12 4-5/8	
11-45	1	12×18½ 6-5/8	12×14 4-5/8	12×12 4-5/8	
12-46	1	12×12 4-5/8	12×12 4-5/8	12×12 4-5/8	
13	2	14×14 4-1	12×12 4-5/8	12×12 4-5/8	
14-48	2	13×13 4-3/4	12×12 4-5/8	12×12 4-5/8	
15-49	2	14×14 4-3/4	12×12 4-5/8	12×12 4-5/8	
16-50	3	16×24 4-1	8"CB31	8"CB31	
17-51	2	16×24 4-3/4	do	do	
18-19-20 52-53-54	2	14×16 4-5/8	do	do	
25-35	2	14×18½ 6-1□	12×14 4-7/8	12×12 4-5/8	
26	3	17×17 4-1	14×14 4-1	12×12 4-5/8	
27-37	2	14×14 4-7/8	12×12 4-5/8	12×12 4-5/8	
28-38	2	15×15 4-1□	12×14 4-1	12×12 4-5/8	
36	3	16×16 4-1□	14×14 4-5/8	12×12 4-5/8	
47	2	14×14 4-3/4	12×12 4-5/8	12×12 4-5/8	
22	2	12×18 6-1	12×14 4-5/8	12×12 4-5/8	12×12 4-5/8
23	1	12×12 4-1	12×12 4-5/8	12×12 4-5/8	
24-58	1	13×13 4-1	12×12 4-5/8	12×12 4-5/8	12×12 4-5/8
33-43	3	17×17 to audit. 4-1½" ft	14×16 4-1	12×16 4-7/8	12×12 4-5/8
34-44	2	12×24 6-5/8	12×24 4-5/8	12×24 4-5/8	12×12 4-5/8
55-21	2	14×18 6-3/4	12×12 4-5/8	12×12 4-5/8	
56	2	14×18 6-1	12×14 4-3/4	12×12 4-5/8	12×12 4-5/8
57	1	12×12 4-1	12×12 4-5/8	12×12 4-5/8	
63	2	15×15 to 23 ⊗	12×12 4-5/8	12×12 4-5/8	
64	2	15×15 to 23 to 23 ⊗ 4-1□	12×12 4-5/8	12×12 4-5/8	
69-70			8×12 4-1/2		
29-39-32-42	1	12×12 4-5/8			
30-31-40-41	1	12×12 4-5/8			

Note:-
⊗ See wall sec. for detail.
Figure shown thus 12 is parallel with front of Bldg.

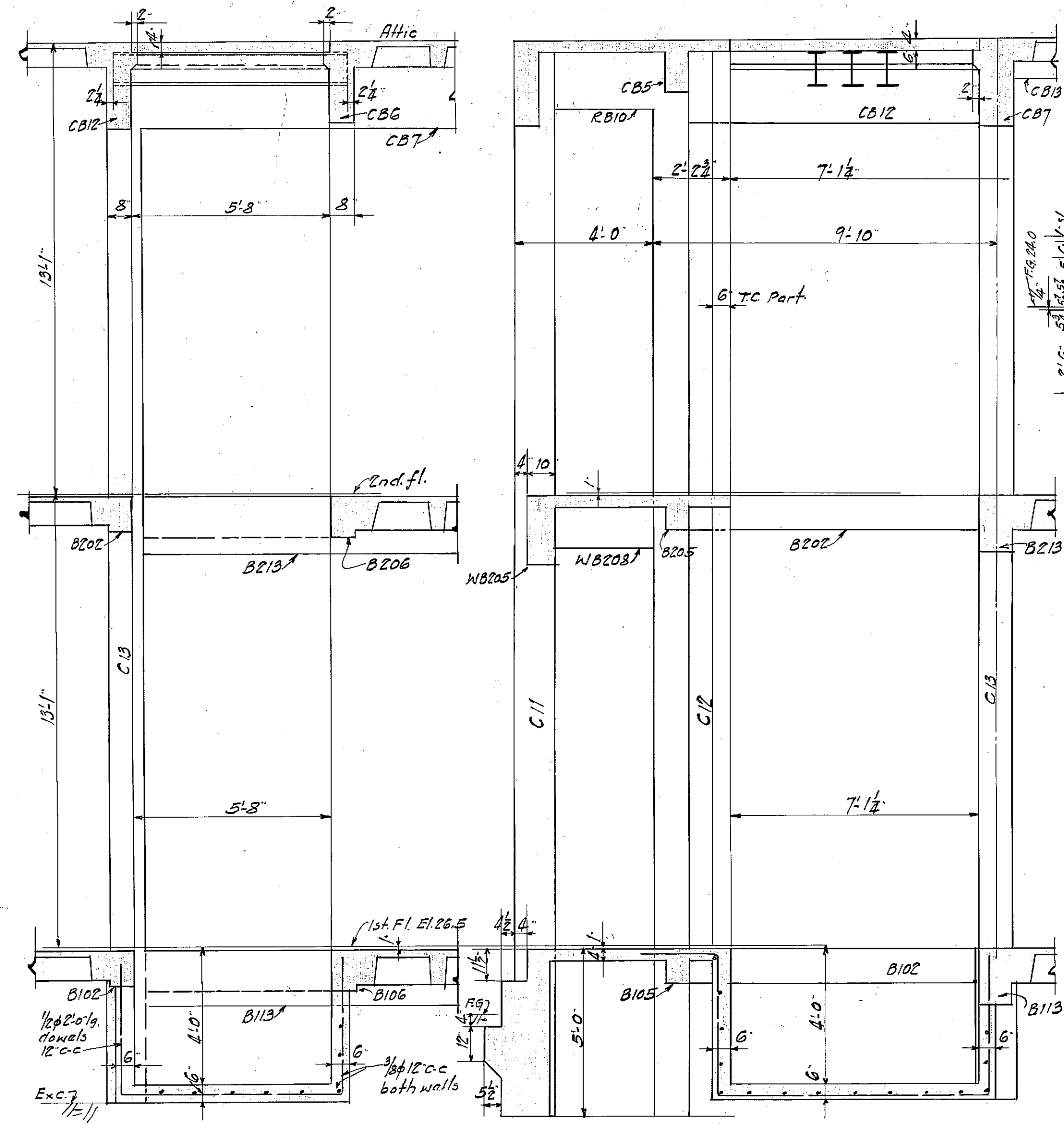

SECTION K-K

SECTION L-L

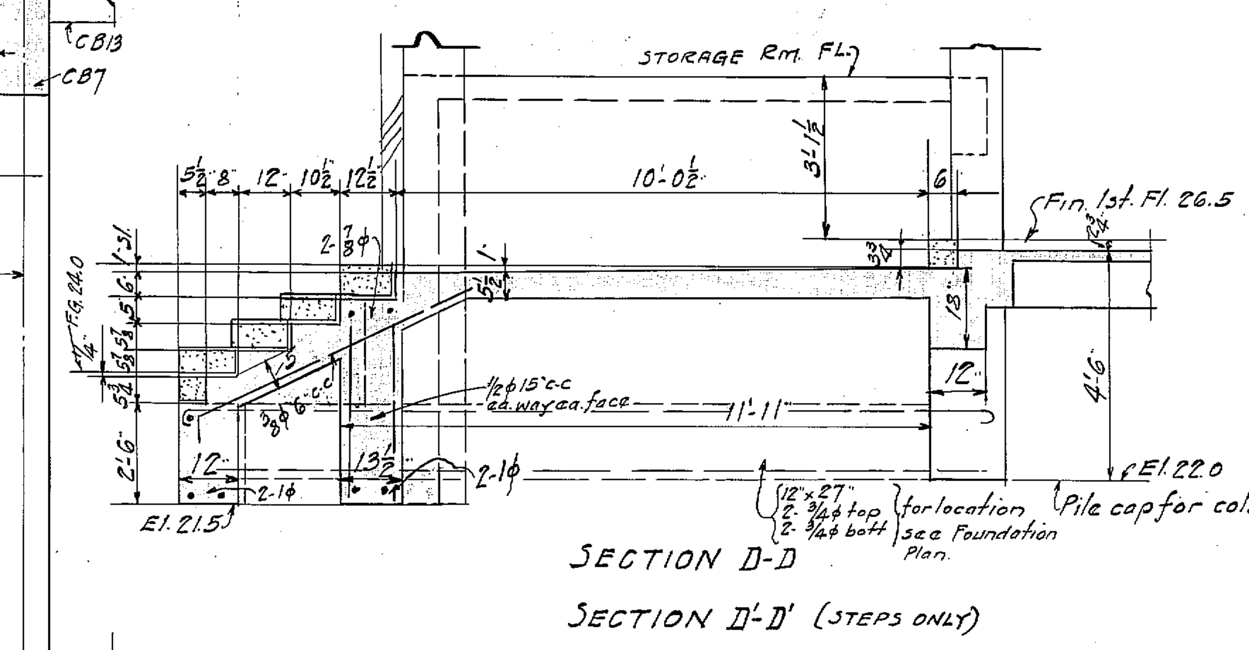

SECTION D-D

SECTION D'-D' (STEPS ONLY)

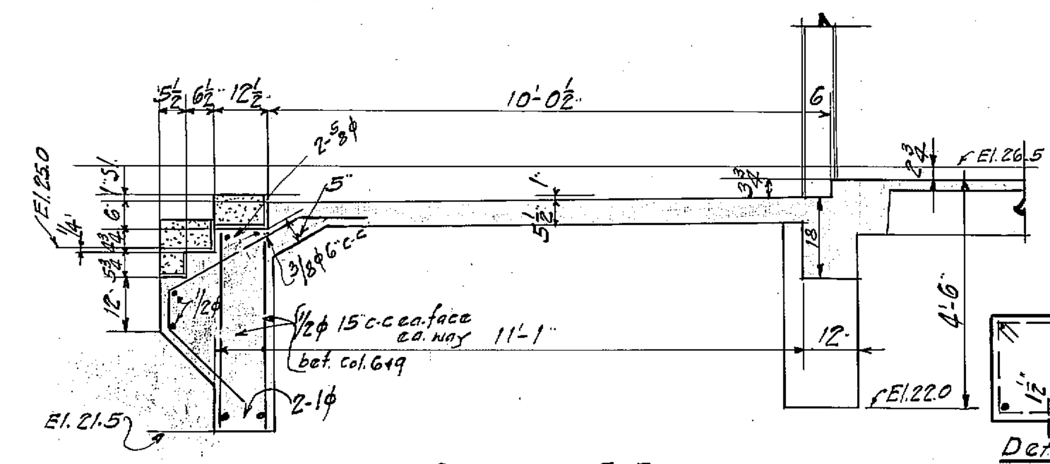

SECTION E-E

GENERAL NOTES FOR ALL BUILDINGS.

1 Dimensions refer to rough concrete surfaces unless otherwise shown or noted.

2 All reinforcing bars to be round (deformed) unless otherwise noted.

3 Shrinkage and temperature reinforcement:—Ribbed slabs, ¼φ bars 12" c-c. Solid slabs, ⅜φ 12" c-c. Slabs placed directly on ground shall have ⅜φ 12" c-c. in both directions. Concrete walls, ⅜φ bars vertical and horizontal 24" c-c. each face, unless otherwise noted. Lap all temperature bars 45 diam. at splices.

4 Ribbed floor slabs shall have a maximum spacing of 20 inches between ribs, with closer spacing where required to miss plumbing and heating pipes and outlets. Continuity of ribs to be maintained.

5 Flanges of concrete beams carrying ribbed slabs shall project not less than 6" or more than 10 inches from each side of beam. Where projection exceeds 6" additional bars equivalent to 25 per cent of beam reinforcement shall be provided in each flange.

6 Stirrups and column ties shall be securely wired to main reinforcement.

7 Column bars shall have a clear distance of 1½ inches from face of column and shall lap directly above each floor for a distance of 2'-6". All columns shall have ¼φ ties not exceeding 8" centers, unless otherwise shown or noted.

8 Pile cap reinforcement shall be equally spaced located 5" above bottom of pile cap and of same size and length as shown on pile cap details. Bars shall have hooked ends.

9 Dowels shall be set 6" above bottom of pile cap and shall extend 2'-6" above pile cap, and shall be of the same size and number as column bars above.

10 Building shall be supported on pile foundation. For safe load values of piles, driving requirements, etc see specifications.

11 Horizontal bars in concrete walls shall be bent at all corners and intersections at 90° for a distance of not less than 24 inches. Bars to lap 45 diameters at splices.

12 Provide at least 2-⅝φ bars over openings in concrete walls, bars to extend 12 inches beyond faces of opening and have hooked ends.

13 All construction joints shall have ⅝φ dowels 2'-0" c to c. Provide key joints (T & G) and dowels where covered walls join buildings except at expansion ends. See Architect's drawings for location and size of door and window openings in concrete walls and for vent openings in slabs. See Mechanical drawings for location and size of openings for pipes.

14 Wrought Iron Sleeves permitted only in flanges. No other portion of beams or ribs may be sleeved without central office approval.

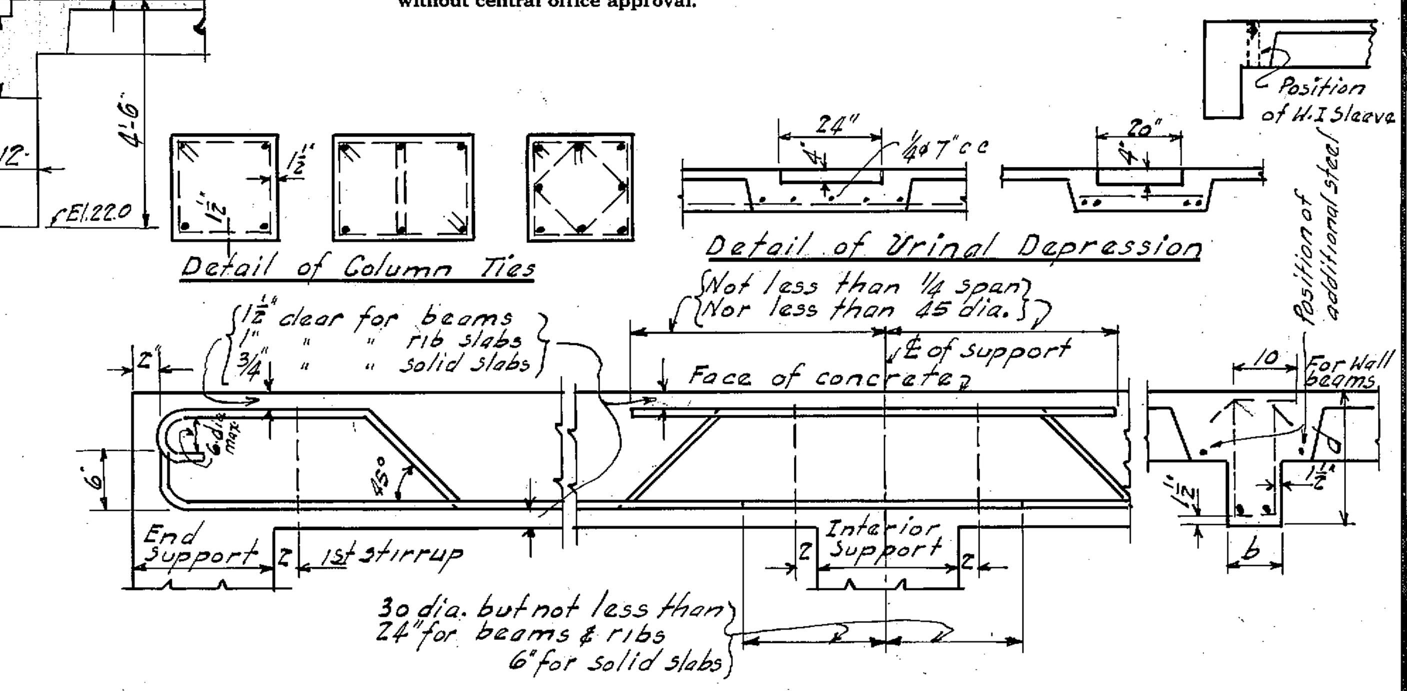

REINFORCEMENT DIAGRAM FOR BEAMS & SLABS

SLAB SCHEDULE / BENDING SCHEDULE (℄ of Support)

Ribbed Slab Mark	b	h	Str. Bars No.	Str. Bars Size	Bent Bars No.	Bent Bars Size	Remarks	a	b	c	Supp	Span	Supp	c	b	a
CS1	5	8+2	1	3/4	1	3/4		2		3'-6"		17'-8½	RB5	3'-6		2
CS2		4"		3/8		3/8	5" c-c alt. bars bent	2		2'-0		10'-3	CB1	2'-0		2
CS3	5	6+2	1	1/2	1	1/2			3'-5	3'-5		13'-6	RB6	2'-9		2
CS4	5	6+2	1	1/2	1	1/2			3'-5	3'-5		13'-4	CB17	3'-5	3'-5	
CS5	5	6+2	1	1/2	1	1/2			3'-5	3'-5		13'-4	CB13	2'-9		2
CS6	5	6+2	1	1/2	1	1/2		2		2'-9	RB12	13'-6		3'-5	3'-5	
CS7	5	6+2	1	1/2	1	1/2			3'-5	2'-2	CB8	8'-7		2'-2	2'-6	
CS8	5	6+2	1	1/2	1	1/2			2'-6	2'-0		9'-6	CB18	2'-0		2
S1	5	8+2	1	5/8	1	5/8			3'-5	3'-5	B101	13'-6		2'-9		2
S2	5	8+2	1	1/2	1	5/8			3'-5	3'-5		13'-4	B 201/101	3'-5	3'-5	
S3	5	8+2	1	5/8	1	5/8			3'-5	3'-5		13'-4	B 203/103	2'-9		2
S3a	5	8+2	1	5/8	1	5/8	flare B203-103 end to 9"		3'-5	3'-5		13'-4	do	2'-9		2
S4	5	10+2	1	5/8	1	5/8		2		2'-9	WB206	13'-4		3'-5	3'-5	
S5	5	10+2	1	1/2	1	5/8			3'-5	2'-2		8'-7	B212	1'-9		2
S6	5	10+2	1	1/2	1	5/8			3'-5	2'-2		8'-7	B211	2'-2	2'-2	
S7	5	8+2	1	5/8	1	5/8		2		2'-4	B210	11'-9½		2'-4		2
S8	5	10+2	1	1/2	1	5/8			2'-4	2'-4		9'-2	B209	2'-4	3'-0	
S9	5	8+2	1	1/2	1	5/8	flare 36"I end to 9"		3'-0	3'-0	B209	11'-9½		2'-4		2
S10	5	10+2	1	5/8	1	5/8			4'-0	4'-0		15'-6	B116	4'-0	4'-0	
S11	5	10+2	1	5/8	1	5/8			4'-0	3'-6		14'-0½	WB101	2'-10		2
S12	5	10+2	1	3/4	1	7/8	flare both ends to 9"	1'-6"±		3'-6		17'-8½	WB110	4'-5		2
S13	5	6+2	1	5/8	1	5/8		4		2'-0		10'-3	WB105	2'-0		4
S8a	5	10+2	1	5/8	1	5/8			2'-4	2'-4		9'-2	B109	1'-10		2

2-4-2-0969

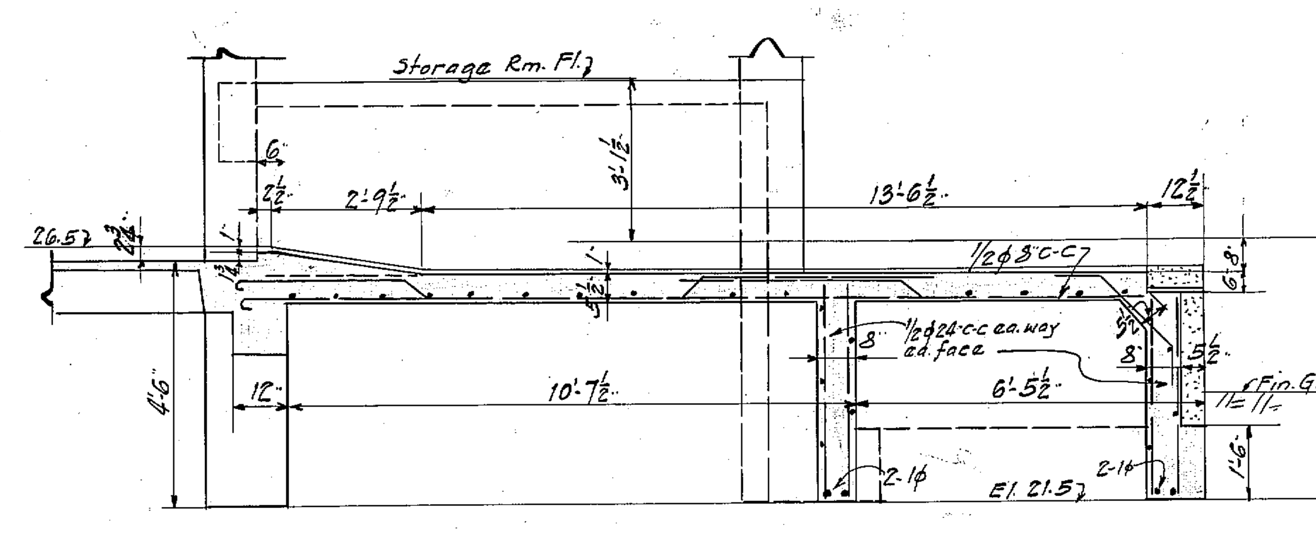

SECTION F-F

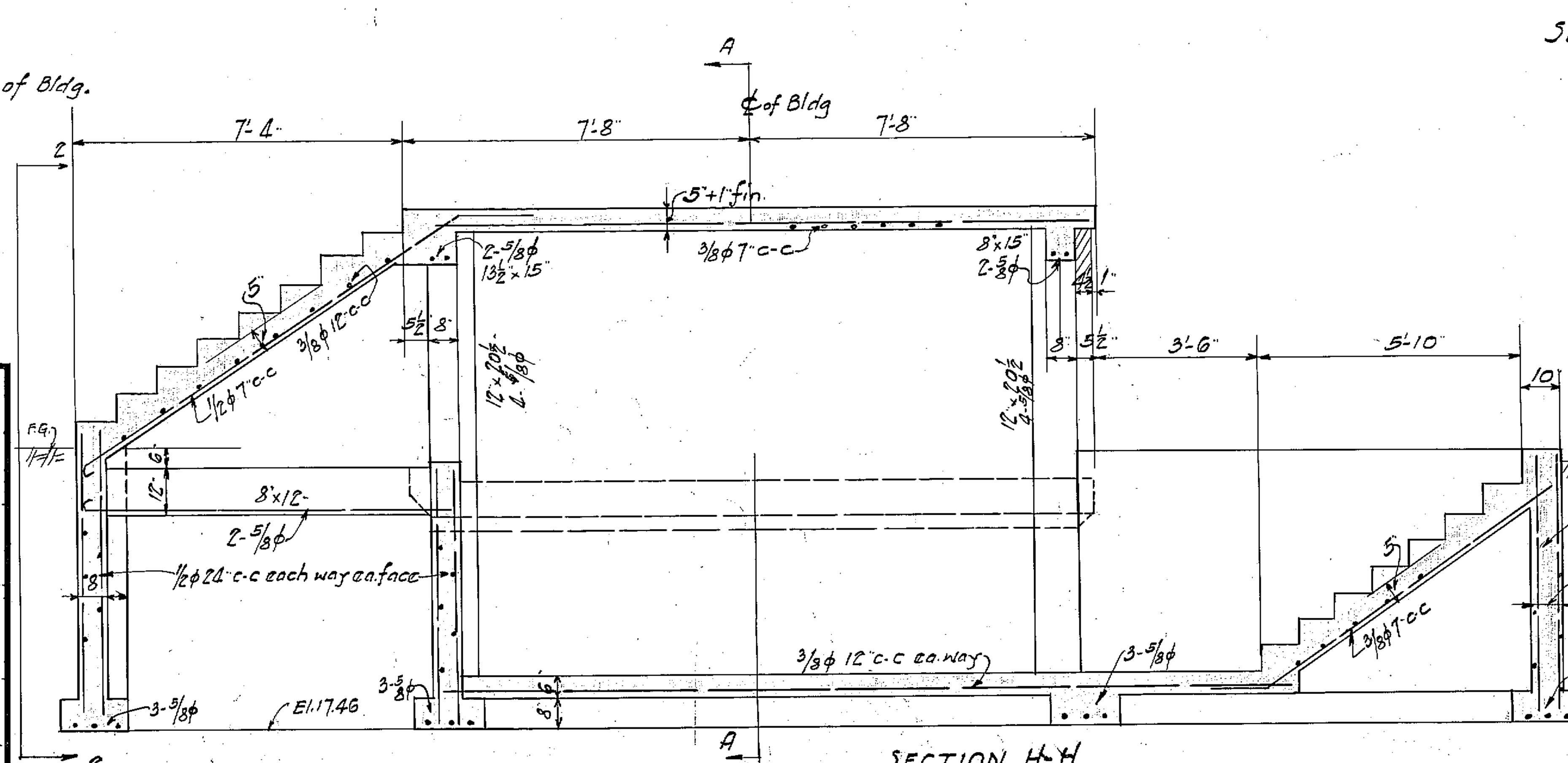

SECTION H-H

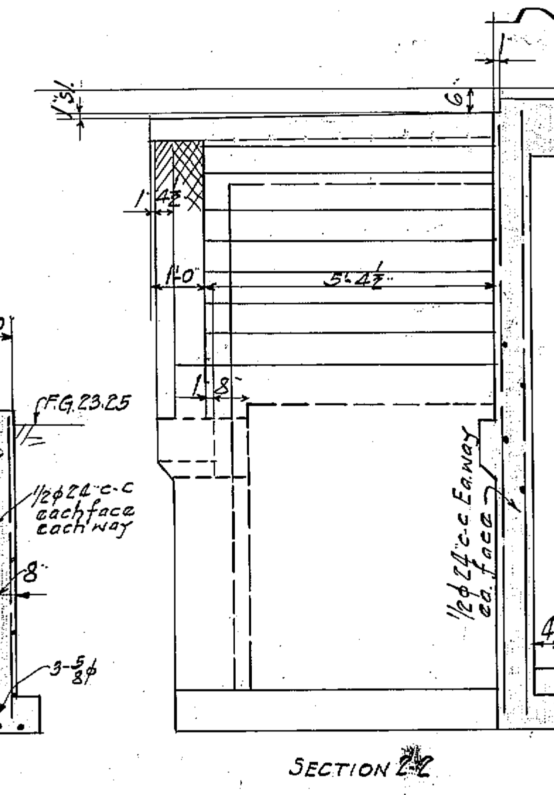

SECTION

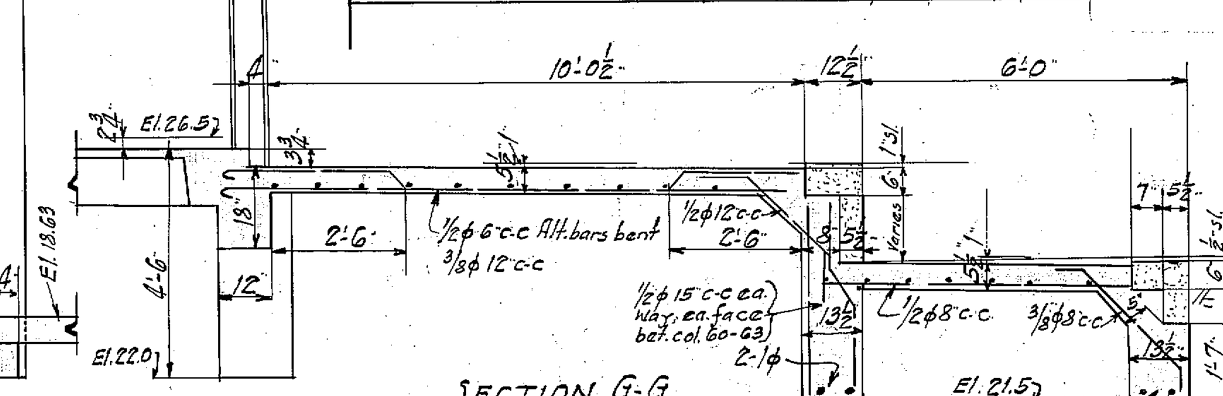

SECTION G-G

RECREATION BUILDING NO. 17

VETERANS ADMINISTRATION FACILITY

BILOXI, MISS. 2-4-2-0969

Drawn H	REVISIONS	NUMBER
Traced H		17-19
Sect. Chf. Hurst		
Date Dec. 20, 1933		SHEET 19 OF 29
Sub-Division Chief John M. Kerr		PROJ. 667

VETERANS ADMINISTRATION
WASHINGTON, D. C.

APPROVED Frank T. Hines
ADMINISTRATOR

George E. Ijams
ASSISTANT ADMINISTRATOR

DIRECTOR OF CONSTRUCTION

CHIEF, TECHNICAL DIVISION

8

RETURN TRACINGS TO PLAN FILES

FILE FOLDER NO. 4