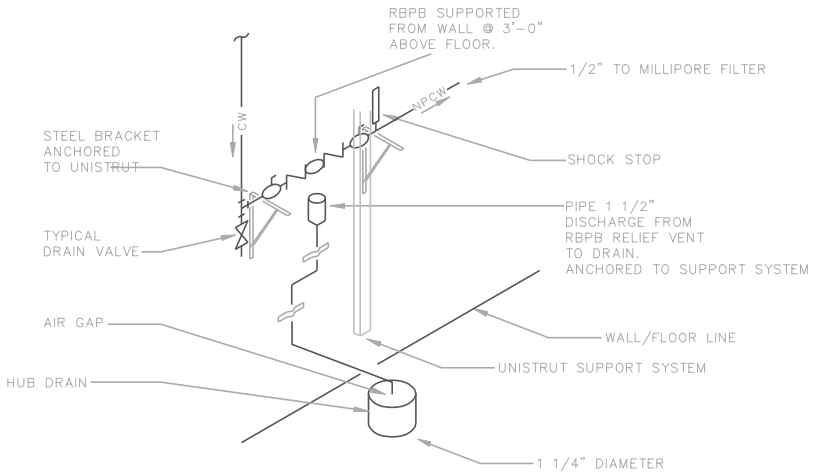

8 REDUCED PRESSURE BACKFLOW PREVENTER

N.T.S.

Drawing Title	Project Title	Date
ISOMETRIC VIEW	111 CONSTRUCT LAB CENTAUR STATION	11/10/2010
		Project No.

SCALE	Building Number	Checked	Drawn	Drawing No.
1/8" = 1'				DS-2

Approved: Service Director	Location	Dwg. 2 of 2
FREDERICK R. BRUHN	MILWAUKEE, WISCONSIN	

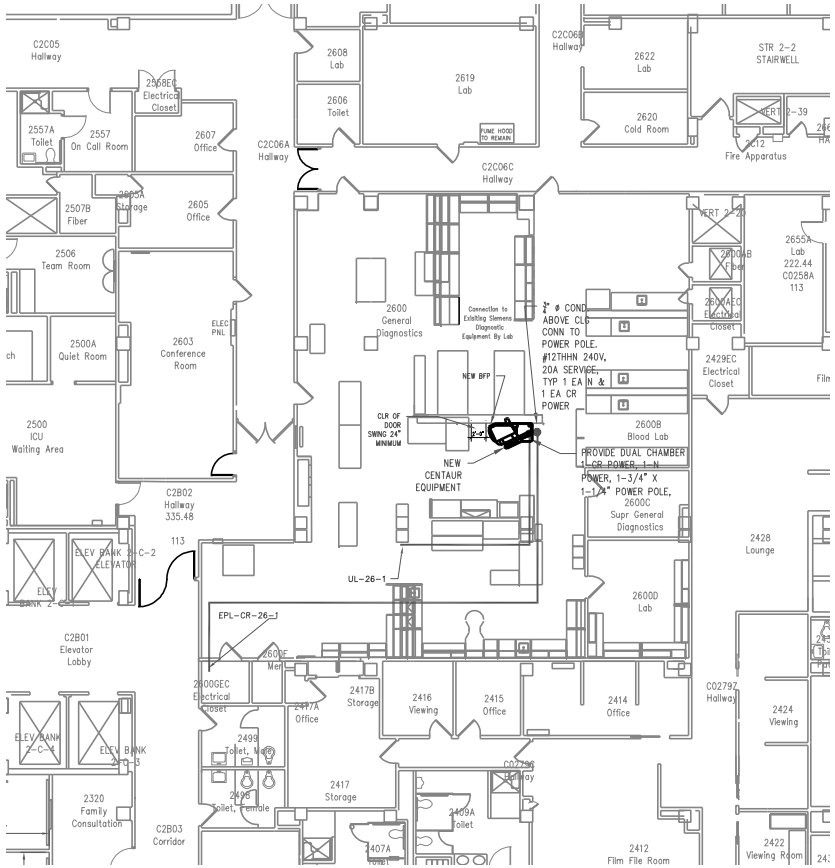

Drawing Title	Project Title	Date
EQUIPMENT LAYOUT	111 CONSTRUCT LAB CENTAUR STATION	11/10/2010
		Project No.

SCALE	Building Number	Checked	Drawn	Drawing No.
1/16" = 1'				DS-1

Approved: Service Director	Location	Dwg. 1 of 2
FREDERICK R. BRUHN	MILWAUKEE, WISCONSIN	