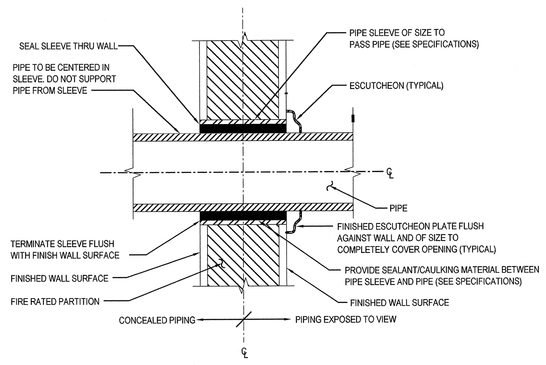

1 PIPE SLEEVE THRU WALL DETAIL

NO SCALE

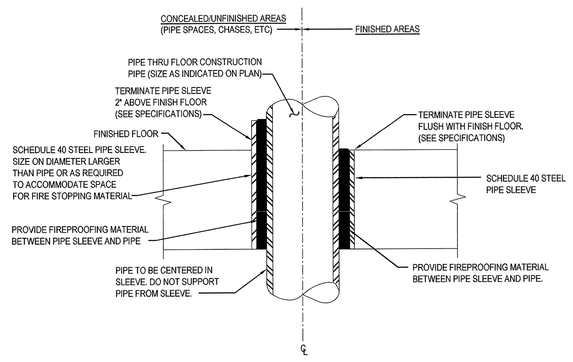

NOTES:

1. APPROVED FIRE STOPPING SHALL BE PROVIDED AND INSTALLED AT ALL EXISTING AND NEW FLOOR/CEILING PENETRATIONS TO MAINTAIN TIME RATED STRUCTURAL FLOOR/CEILING SLAB.
2. APPROVED SPLIT PIPE SLEEVE ASSEMBLY SHALL BE PROVIDED WHERE EXISTING FLOOR/CEILING SLAB PENETRATION OCCURS. (SEE SPECIFICATIONS)

2 PIPE SLEEVE THRU FLOOR DETAIL

NO SCALE

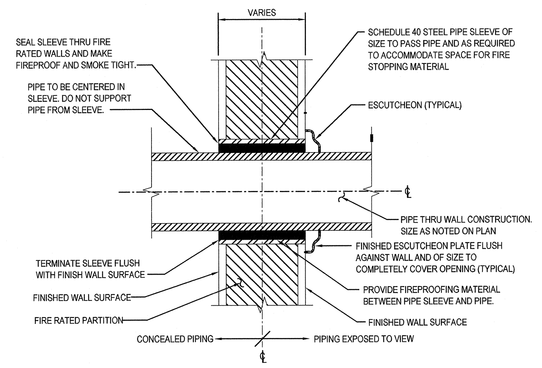

INTERIOR WALLS

NOTES:

1. APPROVED FIRE STOPPING SHALL BE PROVIDED AND INSTALLED AT ALL EXISTING AND NEW WALL PENETRATION THRU TIME RATED WALLS AND PARTITIONS.
2. APPROVED SPLIT PIPE SLEEVE ASSEMBLY SHALL BE PROVIDED WHERE EXISTING WALL PENETRATIONS OCCUR THRU EXISTING TIME RATED WALLS AND PARTITIONS. (SEE SPECIFICATIONS)

3 PIPE SLEEVE THRU FIRE-RATED WALL DETAIL

NO SCALE

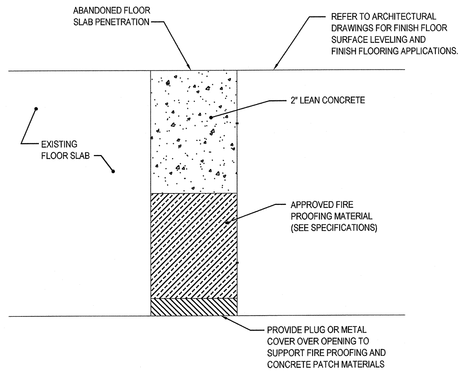

NOTES:

THE CONTRACTOR SHALL SEAL ABANDON FLOOR SLAB PENETRATIONS AS DETAILED IN A MANNER TO MAINTAIN THE TIME/ FIRE RATED CONSTRUCTION SPECIFIED.

PENETRATIONS FOR PIPING DIMENSIONS OF 5" AND LESS.

4 TYPICAL FLOOR SLAB PATCHING DETAIL FOR REMOVED PIPE PENETRATIONS

NO SCALE

STATION OUTLET REQUIREMENTS IN HOSPITALS PER (AIA) FACILITIES GUIDELINES INSTITUTE

SECTION	LOCATION	OXYGEN	VACUUM	MEDICAL AIR	WAGD
2.1-2.4.2	AIRBORNE INFECTION ISOLATION ROOMS	1/BED	1/BED	--	--
2.1-2.4.3	SECLUSION ROOMS (MEDICAL/SURGICAL AND POSTPARTUM	1/BED	1/BED	--	--
2.1-3.2	EXAMINATION/TREATMENT ROOMS (MEDICAL/SURGICAL AND POSTPARTUM CARE)	1/ROOM	1/ROOM	--	--
*2.2-2.2.2	PATIENT ROOMS (MEDICAL/SURGICAL)	1/BED	1/BED	--	--
2.2-2.2.4.4	PROTECTIVE ENVIRONMENT ROOMS	1/BED	1/BED	--	--
2.2-2.5	IMMEDIATE CARE	2/BED	2/BED	1/BED	--
2.2-2.6	CRITICAL CARE (GENERAL)	3/BED	3/BED	1/BED	--
2.2-2.6.4.2	AIRBORNE INFECTION ISOLATION (CRITICAL CARE)	3/BED	3/BED	1/BED	--
2.2-2.7	CORONARY CRITICAL CARE	3/BED	2/BED	1/BED	--
2.2-2.13	PEDIATRIC CRITICAL CARE	3/BED	3/BED	1/BED	--
2.2-2.10	NEWBORN INTENSIVE CARE	3/BASSINET	3/BASSINET	1/BASSINET	--
2.2-2.11.2.2	POSTPARTUM ROOM	1/BED	1/BED	--	--
2.2-2.11.3	LABOR/DELIVERY/RECOVERY (LDR)	1/BED	1/BED	--	--
2.2-2.11.3	LABOR/DELIVERY/RECOVERY/POSTPARTUM (LDRP)	1/BED	1/BED	--	--
2.2-2.11.9.1	CESAREAN DELIVERY ROOM	2/ROOM	4/ROOM	1/ROOM	1/ROOM
2.2-2.11.9.2 (2)	INFANT RESUSCITATION SPACE[3]	3/BASSINET	3/BASSINET	3/BASSINET	--
2.2-2.11.13	OB RECOVERY ROOM	1/BED	3/BED	1/ROOM	--
2.2-2.12.3.1	NEWBORN NURSERY (FULL-TERM)	1/BASSINET[4]	1/BASSINET[4]	1/BASSINET[4]	--
2.2-2.12.3.3	CONTINUING CARE NURSERY	1/BASSINET	1/BASSINET	1/BASSINET	--
2.2-2.13	PEDIATRIC AND ADOLESCENT	1/BED	1/BED	1/BED	--
2.2-2.14.2	PSYCHIATRIC PATIENT ROOMS	--	--	--	--
2.2-2.14.4.2	SECLUSION TREATMENT ROOM (PSYCHIATRIC UNIT)	--	--	--	--
2.2-3.1.2	INITIAL EMERGENCY MANAGEMENT	1/BED	1/BED	--	--
2.2-3.1.3.3	TRIAGE AREA (DEFINITIVE EMERGENCY CARE)	1/STATION	1/STATION	--	--
2.2-3.1.4.3	DEFINITIVE EMERGENCY CARE EXAM/TREATMENT ROOMS	1/BED	1/BED	1/BED	--
2.2-3.1.3.6 (6)	TRAUMA/RESUSCITATION ROOM(S)	2/BED	3/BED	1/BED	--
2.2-3.1.3.6 (7)	ORTHOPEDIC AND CAST ROOM	1/ROOM	1/ROOM	--	--
2.2-3.1.4.3	DEFINITIVE EMERGENCY CARE OBSERVATION UNIT	1/BED	1/BED	--	--
2.2-3.3.2.1	GENERAL OPERATING ROOM	2/ROOM	4/ROOM	1/ROOM	1/ROOM
2.2-3.3.2.2	CARDIAC, TRANSPLANT, NEUROLOGY OPERATING ROOM	2/ROOM	5/ROOM	1/ROOM	1/ROOM
2.2-3.3.2.3	ORTHOPEDIC SURGERY	2/ROOM	4/ROOM	1/ROOM	1/ROOM
2.2-3.3.2.4	SURGICAL CYSTOSCOPIC AND ENDOUROLOGIC	2/ROOM	3/ROOM	1/ROOM	1/ROOM
2.2-5.3.3.3	POST-ANESTHESIA CARE UNIT (PACU)	2/BED	3/BED	1/BED	--
2.2-3.3.3.4	PHASE II RECOVERY	1/BED	3/BED[5]	--	--
2.2-3.3.6.15	ANESTHESIA WORKROOM	1 PER WORKSTATION	--	1 PER WORKSTATION	--
2.2-3.4.4	MRI	1/ROOM	1/ROOM	1/ROOM	--
2.2-3.5.2	CARDIAC CATHETERIZATION LAB	2/BED	2/BED	1/BED	--
2.2-5.7.2.2	AUTHOPSY ROOM	--	1 PER WORKSTATION	--	--

1. FOR ANY AREA OR ROOM NOT DESCRIBED ABOVE, THE FACILITY CLINICAL STAFF SHALL DETERMINE OUTLET REQUIREMENTS AFTER CONSULTATION WITH THE AUTHORITY HAVING JURISDICTION.
2. WAGD STANDS FOR "WASTE ANESTHESIA GAS DISPOSAL" SYSTEM.
3. WHEN INFANT RESUSCITATION TAKES PLACE IN A ROOM SUCH AS A CESAREAN DELIVERY ROOM OR AN LDRP ROOM, INFANT RESUSCITATION SERVICES MUST BE PROVIDED IN THAT ROOM IN ADDITION TO THE MINIMUM SERVICE REQUIRED FOR THE MOTHER.
4. FOUR BASSINETS MAY SHARE ONE OUTLET THAT IS ACCESSIBLE TO EACH BASSINET.
5. IF THE PHASE II RECOVERY AREA IS A SEPERATE AREA FROM THE PACU, ONLY ONE VACUUM PER BED OR STATION SHALL BE REQUIRED.

APPENDIX

A2.2-2.2.2 MEDICAL AIR OUTLETS SHALL BE PROVIDED IN PATIENT ROOMS WHEN INDICATED BY THE FUNCTIONAL PROGRAM.

PLUMBING SYMBOLS & ABBREVIATIONS

—NO—	NITROUS OXIDE LINE (NO)	EXISTING	EX
— —AIR— —	MEDICAL AIR INTAKE LINE	DOWN	DN
—N—	NITROGEN LINE (N)	MEDICAL GAS ZONE VALVE BOX	ZVB
⊖—N	NITROGEN OUTLET (N)	TYPICAL	TYP
⊖—NO	NITROUS OXIDE OUTLET (NO)		PRESSURE/VACUUM SWITCH
⊖—O	OXYGEN OUTLET (O)		
⊖—MV (V)	MEDICAL VACUUM OUTLET (MV) (V)		
⊖—MA	MEDICAL COMPRESSED AIR OUTLET (MA)		
—⊸—	BALL VALVE		
—⊸—	LOCKING MEDICAL GAS VALVE		
—⊸—	COMBINATION BALANCING/ SHUT-OFF VALVE		
—N—	CHECK VALVE		
—MA—	MEDICAL AIR LINE (MA)		
—O—	OXYGEN LINE (O)		
—MV—	MEDICAL VACUUM LINE (MV)		
—DA—	DENTAL AIR LINE (DA)		
—DV—	DENTAL VACUUM LINE (DV)		
— —VAC— —	VACUUM EXHAUST LINE		
	NEW CONNECTION TO EXISTING		
—⊏	CAP OR PLUG		
	INDICATES EXISTING PIPING, FIXTURES OR EQUIPMENTS TO BE REMOVED		
	STRAINER		
XX	INDICATES NOTE LOCATED ELSEWHERE ON DRAWING AND NOTE NUMBER		
XXX / YYYY	DETAIL/PLAN REFERENCE SYMBOL INDICATES DETAIL/PLAN NUMBER / INDICATES DRAWING No FOR WHICH THE DETAIL/PLAN IS LOCATED AND VENT STACKS		
	ZONE VALVE BOX		
	ALARM PANEL		

GENERAL PLUMBING NOTES:

1. ALL LINES NOTED "BELOW FLR" OR "ABV CLG" SHALL BE CONCEALED IN SPACE BETWEEN STRUCTURAL JOIST AND CEILING.
2. COORDINATE LOCATIONS OF ALL LINES AND EQUIPMENT WITH OTHER CONTRACTORS.
3. REMOVE ALL EXPOSED PIPING NOT A PART OF THE REMODELED SYSTEM IN THE EXISTING BUILDING. RENDER CONCEALED PIPING NOT A PART OF THE REMODELED SYSTEM IN THE EXISTING BUILDING COMPLETELY "DEAD". WHERE CONCEALED PIPING IS IN EXISTING PARTITIONS TO BE REMOVED OR INTERFERES WITH REMODELING CONSTRUCTION, THE CONTRACTOR SHALL REMOVE PIPING AND RENDER REMAINING PIPING COMPLETELY "DEAD" OR RELOCATE PIPING IF IT IS PART OF THE REMODELED SYSTEM.
4. LIGHT LINES INDICATE EXISTING PIPING TO REMAIN. HEAVY LINES INDICATE NEW PIPING.
5. PROVIDE ACCESS PANELS IN PLASTER CEILINGS FOR ALL VALVES, WATER FLOW SWITCHES AND ANY OTHER DEVICES WHICH REQUIRES INSPECTION OR MAINTENANCE. FURNISH AND INSTALL ACCESS PANELS UNDER ARCHITECTURAL SPECIFICATIONS.
6. THE CONTRACTOR SHALL PROVIDE AND INSTALL APPROVED PIPE SLEEVES AND FIRE STOPPING AT ALL NEW AND EXISTING FLOOR/CEILING SLAB AND WALL PENETRATIONS WITHIN THE LIMITS OF THE CONTRACT WORK AREA TO MAINTAIN THE TIME RATED CONSTRUCTION SPECIFIED. (REFER TO DETAILS ON THIS DRAWING)
7. WHERE SUSPENDED CEILING ARE INSTALLED, RUN PIPING ABOVE CEILING.
8. FOR COMPLETE ROOM NAMES AND NUMBERS, SEE ARCHITECTURAL DRAWINGS.
9. ALL ITEMS HUNG FROM THE UTILITY FLOOR HAVING A LOAD GREATER THAN 75 POUNDS SHALL BE SUPPORTED FROM THE STEEL FRAMING MEMBERS AND NOT FROM THE UTILITY FLOOR SLAB OR STEEL DECK.
10. ALL MEDICAL GAS PIPING MODIFICATIONS SHALL BE PERFORMED IN ACCORDANCE WITH NFPA 99 REQUIREMENT BY A CERTIFIED CONTRACTOR, AND SHALL INCLUDE TESTING AND CERTIFICATION OF THE MODIFIED SYSTEM BY AN INDEPENDENT TEST FIRM HIRED BY THE CONTRACTOR.
11. REFER TO ARCHITECTURAL PLANS AND SPECIFICATIONS FOR PHASING AND ICRA REQUIREMENTS.
12. ALL MEDICAL GAS PIPING, VALVES, EQUIPMENT, ETC SHALL BE INSTALLED IN STRICT COMPLIANCE WITH NFPA 99.

MASTER ALARM - ER

OXYGEN EMERGENCY RESERVE IN USE	MEDICAL AIR COMPRESSOR MAINTENANCE REQUIRED
OXYGEN SECONDARY LIQUID LEVEL LOW	CARBON MONOXIDE LEVEL HIGH
OXYGEN PRIMARY LIQUID LEVEL LOW	MEDICAL AIR HIGH DEW POINT
RESERVE GAS PRESSURE LOW	MEDICAL AIR LINE PRESSURE HIGH
NO_2 RESERVE CYLINDER IN USE	MEDICAL AIR LINE PRESSURE LOW
NITROUS OXIDE LINE PRESSURE LOW	MEDICAL AIR LAG PUMP IN USE
NITROUS OXIDE LINE PRESSURE HIGH	OXYGEN LINE PRESSURE LOW
NITROGEN RESERVE CYLINDER IN USE	OXYGEN LINE PRESSURE HIGH
NITROGEN LINE PRESSURE LOW	
MEDICAL VACUUM LOW	

MASTER ALARM - RM 1236

OXYGEN EMERGENCY RESERVE IN USE	MEDICAL AIR COMPRESSOR MAINTENANCE REQUIRED
OXYGEN SECONDARY LIQUID LEVEL LOW	CARBON MONOXIDE LEVEL HIGH
OXYGEN PRIMARY LIQUID LEVEL LOW	MEDICAL AIR HIGH DEW POINT
PRESSURE GAS PRESSURE LOW	MEDICAL AIR LINE PRESSURE HIGH
NITROGEN RESERVE CYLINDER IN USE	MEDICAL VACUUM LAG PUMP RUNNING
NITROUS OXIDE LINE PRESSURE LOW	OXYGEN LINE PRESSURE LOW
NITROUS OXIDE LINE PRESSURE HIGH	OXYGEN LINE PRESSURE HIGH
NITROUS OXIDE RESERVE CYLINDER IN USE	
NITROGEN LINE PRESSURE LOW	
MEDICAL VACUUM LOW	

MASTER ALARM - BOILER HOUSE

OXYGEN PRIMARY LIQUID LEVEL LOW	NITROGEN PRESSURE LOW
OXYGEN SECONDARY LIQUID SUPPLY IN USE	MEDICAL VACUUM LOW
OXYGEN EMERGENCY RESERVE LOW	MEDICAL AIR LAG COMPRESSOR IN USE
RESERVE GAS PRESSURE LOW	MEDICAL AIR HIGH DEW POINT
OXYGEN LINE PRESSURE LOW	CARBON MONOXIDE LEVEL HIGH
NITROGEN RESERVE CYLINDER IN USE	MEDICAL AIR LINE PRESSURE LOW
NITROUS OXIDE LINE PRESSURE LOW	MEDICAL AIR LINE PRESSURE HIGH
NITROUS OXIDE RESERVE IN USE	OXYGEN LINE PRESSURE LOW
	OXYGEN LINE PRESSURE HIGH
	VACUUM LAG PUMP ON

MASTER ALARM NOTES

CONTRACTOR SHALL EXTEND ALL MASTER ALARM WIRING IN CONDUIT FROM NEW MEDICAL GAS SOURCE EQUIPMENT TO EACH MASTER ALARM PANEL.

100% CONSTRUCTION DOCUMENTS

CONSULTANTS:

Engineers Planners Surveyors Energy Consultants
H.F. LENZ COMPANY
1407 Scalp Avenue Johnstown, PA 15904
Phone: 814-269-6000 FAX: 814-269-2001
cadd@hflenz.com www.hflenz.com

TIMOTHY M. EARLEY REGISTERED 14138 STATE OF WEST VIRGINIA PROFESSIONAL ENGINEER

ARCHITECT:

ARRAY healthcare facilities solutions
2520 Renaissance Boulevard, Suite 110
King of Prussia, PA 19406
t: 610.270.0599
f: 610.270.0995
www.arrayhfs.com

Project Number	Scale

Drawing Title: SYMBOLS, ABBREVIATIONS, NOTES & DETAILS - MEDICAL GAS

Approved: Project Director

Project Title: MEDICAL GAS SYSTEM REPLACEMENT PROJECT

Location: VAMC, CLARKSBURG

Date: 7/20/2012 | Checked: TME | Drawn: JLJ

VA Project Number: VA244-P-1491

Building Number: 01

Drawing Number: PL001

Dwg. 19 of 44

Office of Facilities Management

Department of Veterans Affairs