VETERANS ADMINSTRATION
HOT SPRINGS, SD

PROJECT NO. 568-13-201

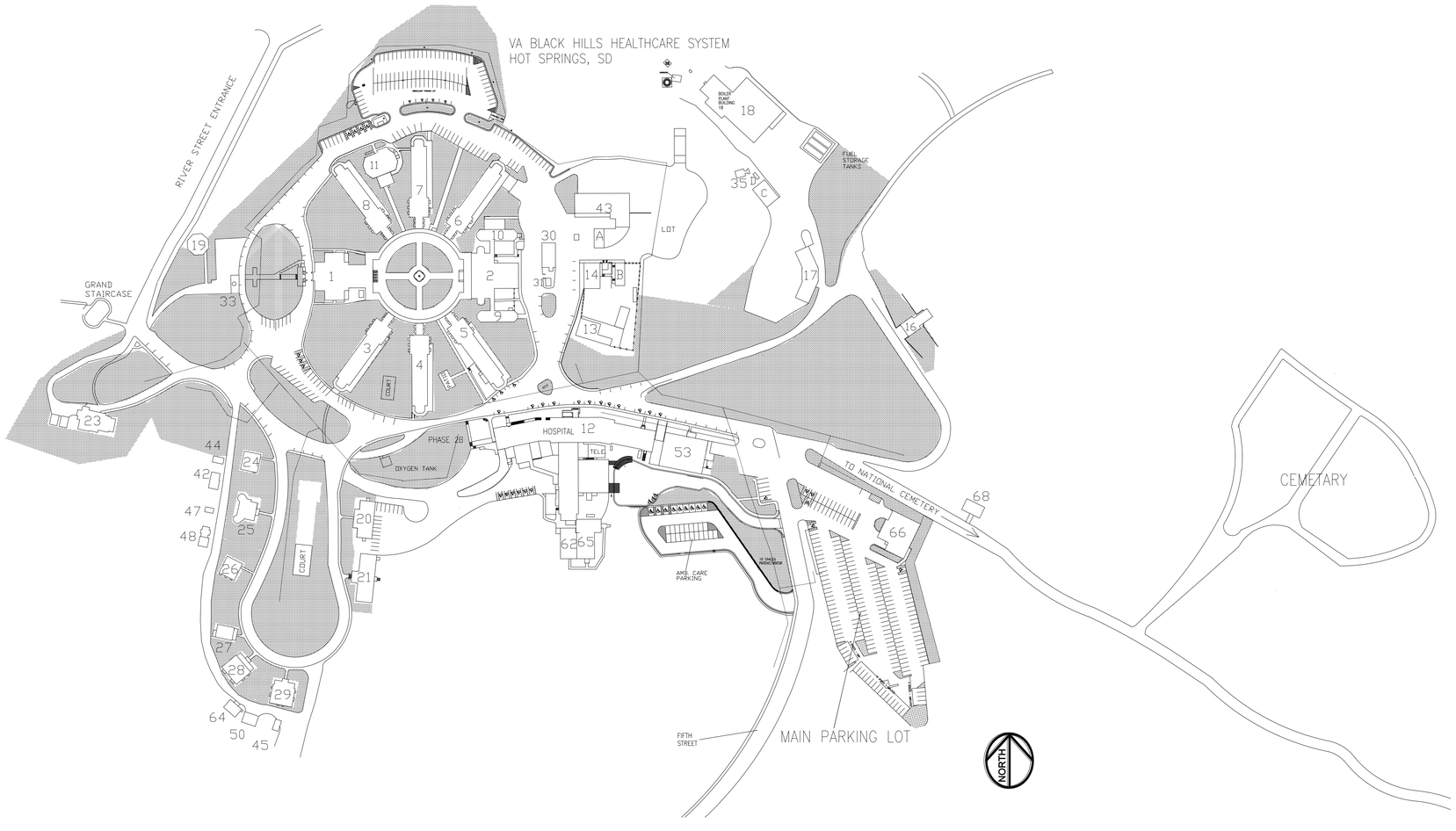

PROJECT LOCATION, NTS

SHEET INDEX

I-1.0	COVER SHEET
I-1.1	IRRIGATION LEGEND AND NOTES
I-1.2	DEMOLITION PLAN
I-1.3	DEMOLITION PLAN
I-1.4	DEMOLITION PLAN
I-1.5	DEMOLITION PLAN
I-1.6	IRRIGATION PLAN
I-1.7	IRRIGATION PLAN
I-1.8	IRRIGATION PLAN
I-1.9	IRRIGATION PLAN
I-1.10	IRRIGATION DETAILS
I-1.11	IRRIGATION DETAILS

BID DOCUMENTS

Revisions: Date:

CONSULTANTS:

Aqua Engineering Inc.
Innovative Water Solutions
375 E. Horsetooth Road, Building 2-202
Fort Collins, CO 80525-3196
970.229.9668 office
970.226.3855 fax
www.aquaengineering.com

REGISTERED PROFESSIONAL ENGINEER
REG. NO. 5929
ROBERT W. BECCARD
SOUTH DAKOTA
01/18/2013

ARCHITECT/ENGINEERS:

Kenneth Hahn Architects

Drawing Title: COVER SHEET	Project Title: RENOVATION IRRIGATION SYSTEM		VA Project Number: 568-13-201
Approved Project Director	Location: HOT SPRINGS, SD		Drawing Number: I-1.0
	Date: JANUARY 18, 2013	Checked: RWB	Drawn: JDL/CAM
			Sheet # 1 of 12

VA BLACK HILLS HEALTH CARE SYSTEM

Department of Veterans Affairs

VA FORM 08-6231

GENERAL DESCRIPTION

A FULLY AUTOMATED SPRINKLER IRRIGATION SYSTEM WILL IRRIGATE TURF AREAS USING POP-UP SPRAY, ROTATING NOZZLE AND ROTARY SPRINKLERS.

MUNICIPAL (POTABLE) WATER WILL BE USED FOR IRRIGATION. THE POINT-OF-CONNECTION (P.O.C.) WILL BE THE EXISTING 4-INCH BACKFLOW PREVENTION ASSEMBLY INDICATED ON THE DRAWINGS, THE BACK FLOW DEVICE WILL BE REPLUMBED FROM THE WATER MAIN TO THE BACKFLOW DEVICE WITH 3-INCH DUCTILE IRON PIPE. THE POC FOR THE DOMICILIARY INNER CIRCLE WILL BE THE EXISTING COPPER PIPE FED FROM BUILDING 7. THE 1-INCH BACKFLOW WILL BE UPGRADED TO MEET CURRENT NATIONAL PLUMBING CODES.

THE IRRIGATION CONTROL SYSTEM WILL BE A CLIMATE BASED TWO WIRE DECODER SYSTEM. FLOW SENSORS WILL BE INCLUDED UNDER THIS CONTRACT TO COMMUNICATE WITH THE CONTROLLER AND CONDUIT WILL BE STUBBED OUT FOR FUTURE COMMUNICATION WITH THE BUILDING CENTRAL CONTROL SOFTWARE.

ISOLATION GATE VALVES PERMIT THE ISOLATION OF SECTIONS OF THE SYSTEM FOR REPAIRS OR MAINTENANCE. QUICK COUPLING VALVES HAVE BEEN PROVIDED THROUGHOUT THE SITE FOR INCIDENTAL WATERING. MANUAL DRAIN VALVES ARE PLACED TO AID IN EMPTYING THE MAINLINE FOR WINTERIZATION.

DEMOLITION: 11 EXISTING POINTS OF CONNECTION, EXISTING MANUAL CONTROL VALVES AND THE EXISTING SPRINKLERS NOTED WILL BE REMOVED. PIPE WILL BE ABANDONED IN PLACE. ISOLATION GATE VALVES IN THE WATER PITS WILL REMAIN IN PLACE but DISCONNECTED FROM THE IRRIGATION SYSTEM.

NEW ROCK MULCH AREAS WITH EDGING AND WEED BARRIER FABRIC WILL BE ADDED UNDER THIS CONTRACT.

PROVISIONS ARE MADE FOR FUTURE ANTICIPATED IRRIGATION NEEDS.

BASE BID: INSTALL ALL COMPONENTS SHOWN ON THE DRAWING WITH THE EXCEPTION OF THE MIANLINE, VAVLES LATERAL PIPE AND SPRINKLERS SHOW FOR BUILDINGS 23-28.
ALTERNATE1: INSTALL MAINLINE AND COMPONENTS SHOWN IN THE ALTERNATE 1 BOUNDARY.

THE NEW SULLAIR TOWABLE AIR COMPRESSOR WILL BE PROVIDED AS PART OF THE BASE BID.

GENERAL NOTES

1. THE SYSTEM DESIGN ASSUMES A MINIMUM DYNAMIC PRESSURE FOR THE IRRIGATION SYSTEM OF 58 PSI DOWN STREAM OF THE EXISTING REDUCED PRESSURE ZONE BACKFLOW DEVICE AT A MINIMUM DISCHARGE OF 300 GPM AT THE POINT OF CONNECTION. NOTIFY THE CONTRACTING OFFICER REPRESENTATIVE IF THERE IS A DISCREPANCY IN PRESSURE OR FLOW, TEST FOR BOTH IMMEDIATELY UPON COMPLETION OF THE STUB OUT BY THE UTILITY CONTRACTOR.

2. READ THOROUGHLY AND BECOME FAMILIAR WITH THE SPECIFICATIONS AND INSTALLATION DETAILS FOR THIS AND RELATED WORK PRIOR TO CONSTRUCTION. CONFIRM EXACT LIMITS OF IRRIGATED AREA AND ALL EXISTING AND FUTURE HARDSCAPE AND BURIAL AREAS PRIOR TO CONSTRUCTION.

3. COORDINATE UTILITY LOCATES (SOUTH DAKOTA ONE CALL 811) OF UNDERGROUND UTILITIES PRIOR TO CONSTRUCTION. CONTRACTOR RESPONSIBLE FOR LOCATING ALL UNDERGROUND UTILITIES AND CONDITIONS BEFORE EXCAVATING. CONTRACTOR TO COORDINATE LOCATION OF VA OWNED UTILITIES WITH VA PRIOR TO CONSTRUCTION.

4. DO NOT PROCEED WITH THE INSTALLATION OF THE IRRIGATION SYSTEM WHEN IT IS OBVIOUS IN THE FIELD THAT OBSTRUCTIONS OR GRADE DIFFERENCES EXIST THAT MIGHT NOT HAVE BEEN CONSIDERED IN THE ENGINEERING, OR IF DISCREPANCIES IN CONSTRUCTION DETAILS, LEGEND, NOTES, OR SPECIFICATIONS ARE DISCOVERED. BRING ALL SUCH OBSTRUCTIONS OR DISCREPANCIES TO THE ATTENTION OF THE RESIDENT ENGINEER.

5. THE DRAWINGS ARE DIAGRAMMATIC. THEREFORE, THE FOLLOWING SHOULD BE NOTED:
   A. IRRIGATION COMPONENTS MAY BE SHOWN OUTSIDE PLANTING AREAS FOR CLARITY.
   B. AVOID CONFLICTS BETWEEN THE IRRIGATION SYSTEM, PLANTING MATERIALS, AND ARCHITECTURAL FEATURES.
   C. INSTALL IRRIGATION PIPE AND WIRING IN LANDSCAPED AREAS WHENEVER POSSIBLE.

6. SELECT NOZZLES FOR ROTATOR AND ROTARY SPRINKLERS WHICH PROVIDE COMPLETE AND ADEQUATE COVERAGE IF SITE CONDITIONS ARE NOT AS SHOWN. CAREFULLY ADJUST THE RADIUS OF THROW AND ARC OF EACH ROTARY SPRINKLER TO PROVIDE THE BEST PERFORMANCE AND MINIMIZE OVERSPRAY.

7. CONNECT ALL ELECTRICAL POWER TO THE IRRIGATION CONTROL SYSTEM IN ACCORDANCE WITH THE NATIONAL ELECTRIC CODE AND ALL APPLICABLE LOCAL ELECTRIC UTILITY CODES AND AS PER DEPARTMENT OF VETERANS AFFAIRS SPECIFICATIONS.

8. WITH REGARD TO PIPE SIZING, THE FOLLOWING SHOULD BE NOTED: IF A SECTION OF UNSIZED PIPE IS LOCATED BETWEEN TWO IDENTICALLY SIZED SECTIONS, THE UNSIZED PIPE IS THE SAME NOMINAL SIZE AS THE TWO SIZED SECTIONS. THE UNSIZED PIPE SHOULD NOT BE CONFUSED WITH THE DEFAULT PIPE SIZE NOTED IN THE LEGEND.

9. PROVIDE THE FOLLOWING COMPONENTS TO THE OWNER PRIOR TO THE COMPLETION OF THE PROJECT:
   A. TWO OPERATING KEYS FOR EACH TYPE OF MANUALLY OPERATED VALVE.
   B. TWO OF EACH SERVICING WRENCH OR TOOL NEEDED FOR COMPLETE ACCESS, ADJUSTMENT, AND REPAIR OF ALL ROTARY SPRINKLERS.
   C. TEN OF EACH TYPE OF SPRINKLER HEAD ASSEMBLY AS SHOWN ON THE DRAWINGS.
   D. ONE NEW SULLAIR 125 TOWABLE AIR COMPRESSOR TO BE USED FOR WINTERIZATION.

10. TURN OVER ALL SALVAGEABLE SPRINKLER HEADS TO THE OWNER'S REPRESENTATIVE ON SITE, DISPOSE OF UNWANTED ITEMS AND ALL OTHER DEBRIS OFF SITE.

11. USE DECHLORINATING UNIT WHEN FLUSHING SYSTEM MAINLINE AND LATERAL PIPE, REFER TO SPECIFICATIONS FOR ADDITIONAL INFORMATION.

12. RESTORE DISTURBED LANDSCAPE TO MATCH SURROUNDING CONDITIONS, SEEDING MAY BE USED FOR TRENCHES, SOD WILL BE USED FOR BORE PITS AND BACKFLOW PAD REMOVAL RENOVATION.

LEGEND

- EXISTING IRRIGATION PIPE
- SDR 11 HDPE SLEEVING FOR PVC LATERAL PIPE AND CONTROL WIRE
- SDR 11 HDPE IRRIGATION MAINLINE PIPE, NOT SLEEVED
- POINT-OF-CONNECTION (P.O.C.)
- CAPPED MAINLINE FOR FUTURE USE
- CL 160 PVC LATERAL PIPE TO SPRINKLERS
- UNCONNECTED PIPE CROSSING
- ISOLATION GATE VALVE ASSEMBLY
- QUICK COUPLING VALVE ASSEMBLY
- FLOW SENSOR OR MASTERVALVE/FLOW SENSOR SEE DETAILS
- CONTINUIOUS ACTING AIR VACUUM RELIEF VALVE ASSEMBLY
- REMOTE CONTROL VALVE ASSEMBLY
- MANUAL DRAIN VALVE ASSEMBLY
- BORE EQUIPMENT AND BORE PIT LOCATIONS
- POP-UP SPRAY SPRINKLER: RAINBIRD 1804 SAM-PRS NOZZLE
  PRESSURE: 30 PSI RADIUS: 5 FEET
  FLOW (GPM): Q - 0.10 H - 0.20 F - 0.41
- POP-UP SPRAY SPRINKLER: RAINBIRD 1804 SAM-PRS NOZZLE
  PRESSURE: 30 PSI RADIUS: 8 FEET
  FLOW (GPM): Q - 0.26 H - 0.52 F - 1.05
- POP-UP SPRAY SPRINKLER: RAINBIRD 1804 SAM-PRS NOZZLE
  PRESSURE: 30 PSI RADIUS: 10 FEET
  FLOW (GPM): Q - 0.39 H - 0.79 F - 1.58
- POP-UP SPRAY SPRINKLER: RAINBIRD 1804 SAM-PRS NOZZLE
  PRESSURE: 30 PSI RADIUS: 12 FEET
  FLOW (GPM): Q - 0.65 H - 1.30 F - 2.60
- POP-UP SPRAY SPRINKLER: RAINBIRD 1804 SAM-PRS NOZZLE
  PRESSURE: 30 PSI RADIUS: 15 FEET
  FLOW (GPM): Q - 0.92 H - 1.85 F - 3.70
- POP-UP SPRAY SPRINKLER: RAINBIRD 1812 SAM-PRS NOZZLE 1402
  PRESSURE: 30 PSI RADIUS: 2 FEET
  FLOW (GPM): 0.05
- RAIN BIRD ROTARY R13-18 NOZZLE INSTALLED ON RAIN BIRD 1800-SAM-P-45 SPRAY BODY PRESSURE: 45 PSI RADIUS: 13-18 FEET (SEE DETAILS FOR POP-UP HEIGHT) FLOW (GPM): Q - 0.49 H - 0.98 F-1.96
- RAIN BIRD ROTARY R17-24 NOZZLE INSTALLED ON RAIN BIRD 1800-SAM-P-45 SPRAY BODY PRESSURE: 45 PSI RADIUS: 17-24 FEET (SEE DETAILS FOR POP-UP HEIGHT) FLOW (GPM): Q - 0.92 H - 1.84 F -3.67
- POP-UP GEAR-DRIVEN ROTOR SPRINKLER: RAINBIRD 5500-SS NOZZLE PRESSURE: 50 PSI

FC	PC	NOZZLE	FLOW(GPM)	RADIUS (FEET)
3	3	3	3.0	41
4	4	4	3.3	43
6	6	6	5.4	47
8	8	8	7.3	49

NOTE: FC=FULL CIRCLE, PC=PART CIRCLE

- (A) IRRIGATION CONTROLLER ASSEMBLY: REFER TO SPECIFICATIONS, CONTROLLER 1: 200 STATIONS AVAILABLE, 107 STATIONS USED
- (W) WEATHER STATION
- 1-1 / 33 / 1" / - : INDICATES CONTROLLER AND CONTROLLER STATION NUMBER; INDICATES LATERAL DISCHARGE IN GPM; INDICATES REMOTE CONTROL VALVE SIZE IN INCHES

LANDSCAPE LEGEND

- EXISTING ROCK MULCH
- EXISTING TURF AREAS OR AREAS THAT WERE IDENTIFIED TO BE IRRIGATED IN THIS PROJECT
- INSTALL GEOTEXTILE, STEEL EDGING AND ROCK MULCH PER THE SPECIFICATIONS.

FLAG NOTES

1. POINT OF CONNECTION 1: USING 4-INCH DUCTILE IRON PIPE, CONNECT TO THE DOWNSTREAM END OF THE ISOLATION GATE VALVE IN THE WATER PIT INDICATED. ROUTE THE PIPE TO THE BACKFLOW AND MAKE THE FLANGE CONNECTIONS, DISPOSE OF THE EXISTING SOLVENT WELD PVC PIPE. FROM THE DOWNSTREAM END OF THE EXISTING BACKFLOW REMOVE THE EXISTING SOLVENT WELD PVC PIPE. REPLACE THE PVC PIPE WITH DUCTILE IRON PIPE TO 4-INCH DUCTILE FLANGED IRON EL BELOW GRADE.

2. POINT OF CONNECTION 2: EXCAVATE AND EXPOSE THE EXISTING 1-INCH GALVANIZED OR COPPER PIPE AT THE APPROXIMATE LOCATION SHOWN. USE THREADED FITTING AND DIELECTRIC UNION TO TRANSITION TO 1-INCH COPPER PIPE AND BRING PIPE ABOVE GRADE. INSTALL PRESSURE VACUUM BREAKER BACKFLOW DEVICE AND ROUTE COPPER PIPE DOWNSTREAM OF THE BACKFLOW BELOW GRADE. TRANSITION TO CL200 PVC MAINLINE PIPE IN THE CENTER COURTYARD ONLY.

3. INSTALL IRRIGATION CONTROLLER ASSEMBLY IN OFFICE OF BUILDING 13, PROVIDE AND INSTALL ELECTRICAL CORD FROM CONTROLLER TO EXISTING OUTLET PROVIDED. INSTALL APPROXIMATELY 45-FEET OF ALUMINUM CONDUIT INSIDE THE BUILDING TO THE SOUTHERN EXTERIOR WALL FOR DECODER CONTROL WIRE PATH. COORDINATE EXACT LOCATION ON WALL FOR CONTROLLER AND CONDUIT ROUTING WITH OWNER'S REPRESENTATIVE ON SITE PRIOR TO CONSTRUCTION. CORE DRILL THE STONE WALL ON THE SOUTH SIDE OF THE BUILDING FOR THE CONDUIT. PROVIDE A WATERPROOF SEAL AROUND THE WALL PENETRATION.

4. COORDINATE WEATHER STATION AND COMMUNICATION WIRE ROUTING IN 1-INCH ALUMINUM CONDUIT FROM THE WEATHER SENSOR TO THE IRRIGATION CONTROLLER LOCATION OWNER'S REPRESENTATIVE ON SITE PRIOR TO CONSTRUCTION. MOUNT WEATHER STATION ON THE NORTH PEAK OF THE ROOF ON THE FASCIA, BUILDING 13.

5. INSTALL MANUAL MAINLINE DRAINS AT APPROXIMATE LOCATION INDICATED AND ROUTE THE PVC PIPE SLOPED TO DRAIN TO DAYLIGHT, COVER EXPOSED END OF PIPE PER THE DETAILS.

6. AIR VACUUM RELIEF VALVE ASSEMBLY LOCATION SHOWN IS APPROXIMATE. VERIFY THE LOCATION OF THE HIGHEST ELEVATION ON THE MAINLINE AND INSTALL THE AIR VACUUM RELIEF VALVE ASSEMBLY AT THE HIGH POINT IN THIS AREA.

7. ROUTE IRRIGATION MAINLINE PIPE 3-FEET FROM EDGE OF HARDSCAPE WHEN POSSIBLE. INSTALL VALVE BOXES ON MAINLINE PIPE IN THIS AREA PERPENDICULAR TO THE EDGE OF PAVEMENT AND MAINTAIN A UNIFORM DISTANCE OF APPROXIMATELY 3-FEET FROM THE VALVE BOX TO THE EDGE OF HARDSCAPE.

8. BORE PIT LOCATIONS ARE SHOWN FOR BIDDING PURPOSES AND ARE APPROXIMATE. IN THE EVENT THAT A BORE PIT LOCATION INTERFERES WITH UTILITIES OR OTHER SITE OBSTRUCTIONS NOTIFY THE OWNER'S REPRESENTATIVE IMMEDIATELY TO DETERMINE AN ALTERNATIVE BORE PIT LOCATION. AFTER THE DIRECTIONAL BORING IS DONE THE CONTRACTOR WILL BACKFILL HOLE AND COMPACT TO MATCH SURROUNDING GRADE. RESOD BORE PIT WITH BLUEGRASS SOD TO MATCH EXISTING TURF.

9. COORDINATE IRRIGATION AND WIRE SLEEVING INSTALLATION BENEATH STREET CROSSINGS WITH OWNER'S REPRESENTATIVE ON SITE PRIOR TO CONSTRUCTION. TERMINATE SLEEVE ENDS 12-INCHES BEYOND THE EDGE OF PAVEMENT. COVER PIPE ENDS AND MARK WITH STAKES. REFER TO IRRIGATION SPECIFICATIONS FOR PIPE AND WIRE CONDUIT SLEEVE SIZES. REFER TO SPECIFICATIONS FOR SLEEVE SIZES.

10. REFER TO DETAILS AND SPECIFICATIONS FOR FLOW SENSOR INSTALLATION. FLOW SENSORS WILL BE SENDING THE PULSE SIGNAL BACK TO A PULSE READER IN BUILDING 13 SO THE MONTHLY FLOW CAN BE RECORDED.

11. PROVIDE AND INSTALL EROSION CONTROL MAT ON THE DOWNHILL SIDE OF THE TRENCHES, USE ENOUGH MAT TO TRAP ANY SEDIMENT THAT MAY BE WASHED OUT THE TRENCHES ONT HE DOWNHILL SIDE OR DURING A RAIN EVENT.

12. ROUTE TWO WIRE PATH THROUGH BUILDING 7. PENETRATE THE BUILDING AT THE ABANDONED HOSE BIB AT THE APPROXIMATE LOCATION SHOWN. CUT THE GALVANIZED PIPE INSIDE THE BUILDING AND TRANSITION TO ALUMINUM CONDUIT. ROUTE THE CONDUIT ALONG THE CEILING WITH THE OTHER UTILITIES TO THE WALL PENETRATION WHERE THE WATER EXITS THE BUILDING TO THE CENTRAL COURTYARD. CORE DRILL THE WALL ADJACENT TO THE WATER LINE PENETRATION, SEAL WALL PENETRATION WITH WATERPROOF GROUT.

13. INSTALL DECODER SYSTEM GROUNDING ROD AT REMOTE CONTROL VALVE LOCATION INDICATED.

14. WHEN INSTALLING ROCK AND EDGING CHANGE GRADE SO THE LEVEL OF TURF AND GRAVEL IS THE SAME AT EDGING.

PLANT LIST

PLANT QUANTITY	PLANT SYMBOL	COMMON NAME BOTANICAL NAME	SIZE MIN.	HEIGHT MIN.	SPREAD MIN.	COMMENTS	WATER USAGE
16		Creeping Juniper Juniperous horizontalis	4-inch pot	12"	36-48"	NURSERY GROWN, MATCHED, FULL.	LOW

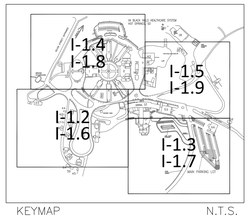

KEYMAP N.T.S.

BID DOCUMENTS

Revisions:	Date:

CONSULTANTS:

Aqua Engineering Inc. Innovative Water Solutions
375 E. Horsetooth Road, Building 2-202
Fort Collins, CO 80525-3196
970.229.9668 office
970.226.3855 fax
www.aquaengineering.com

REGISTERED PROFESSIONAL ENGINEER REG. NO. 5929 ROBERT W. BECCARD SOUTH DAKOTA
01/18/2013

ARCHITECT/ENGINEERS:

Kenneth Hahn Architects

Drawing Title	IRRIGATION LEGEND AND NOTES
Approved Project Director	
Project Title	RENOVATION IRRIGATION SYSTEM
Location	HOT SPRINGS, SD
Date	JANUARY 18, 2013
Checked	RWB
Drawn	JDL/CAM
VA Project Number	568-13-201
Drawing Number	I-1.1
Sheet # 2 of 12	

VA BLACK HILLS HEALTH CARE SYSTEM

Department of Veterans Affairs

VA FORM 08-6231

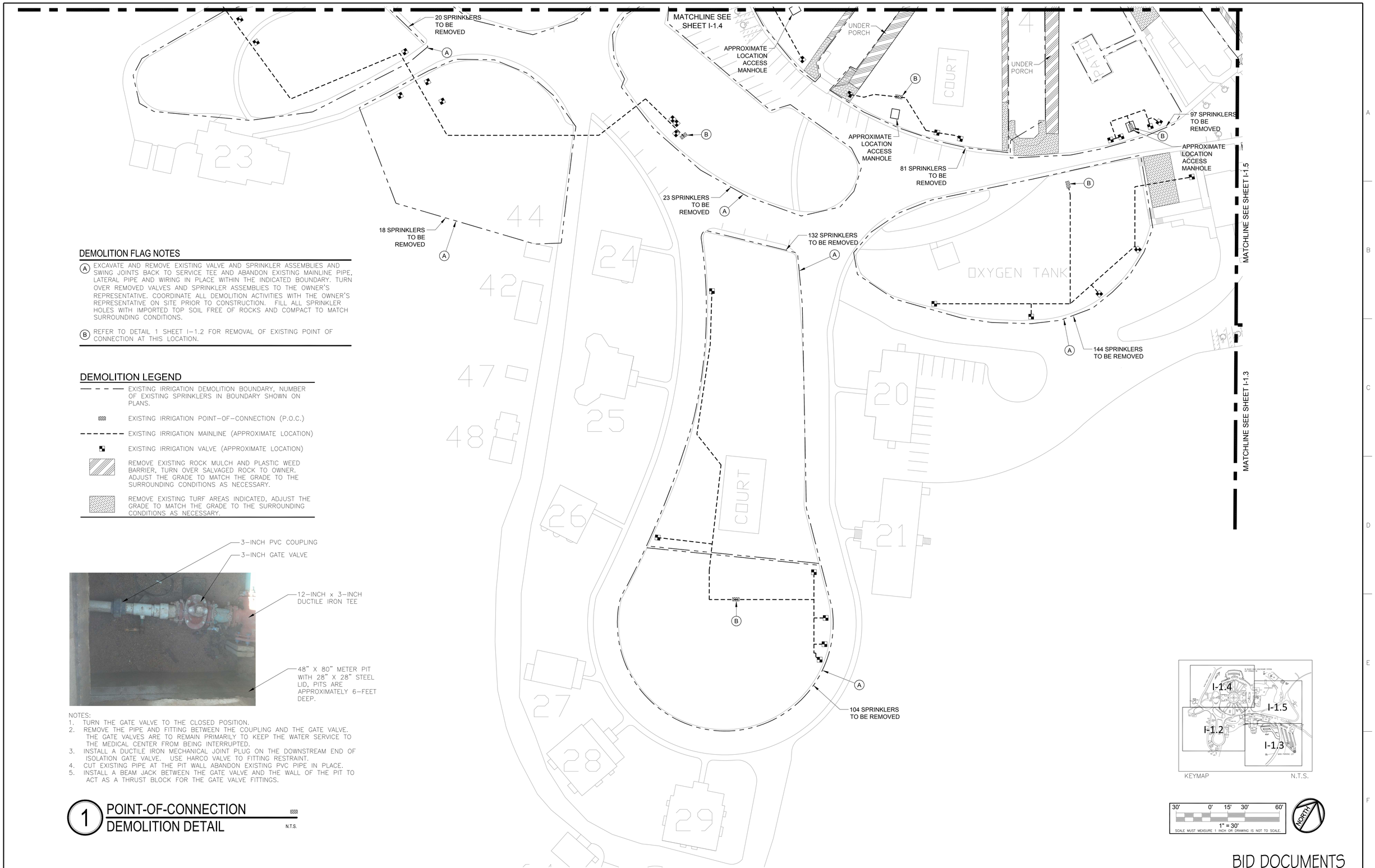

DEMOLITION FLAG NOTES

(A) EXCAVATE AND REMOVE EXISTING VALVE AND SPRINKLER ASSEMBLIES AND SWING JOINTS BACK TO SERVICE TEE AND ABANDON EXISTING MAINLINE PIPE, LATERAL PIPE AND WIRING IN PLACE WITHIN THE INDICATED BOUNDARY. TURN OVER REMOVED VALVES AND SPRINKLER ASSEMBLIES TO THE OWNER'S REPRESENTATIVE. COORDINATE ALL DEMOLITION ACTIVITIES WITH THE OWNER'S REPRESENTATIVE ON SITE PRIOR TO CONSTRUCTION. FILL ALL SPRINKLER HOLES WITH IMPORTED TOP SOIL FREE OF ROCKS AND COMPACT TO MATCH SURROUNDING CONDITIONS.

(B) REFER TO DETAIL 1 SHEET I-1.2 FOR REMOVAL OF EXISTING POINT OF CONNECTION AT THIS LOCATION.

DEMOLITION LEGEND

- EXISTING IRRIGATION DEMOLITION BOUNDARY, NUMBER OF EXISTING SPRINKLERS IN BOUNDARY SHOWN ON PLANS.
- EXISTING IRRIGATION POINT-OF-CONNECTION (P.O.C.)
- EXISTING IRRIGATION MAINLINE (APPROXIMATE LOCATION)
- EXISTING IRRIGATION VALVE (APPROXIMATE LOCATION)
- REMOVE EXISTING ROCK MULCH AND PLASTIC WEED BARRIER, TURN OVER SALVAGED ROCK TO OWNER. ADJUST THE GRADE TO MATCH THE GRADE TO THE SURROUNDING CONDITIONS AS NECESSARY.
- REMOVE EXISTING TURF AREAS INDICATED, ADJUST THE GRADE TO MATCH THE GRADE TO THE SURROUNDING CONDITIONS AS NECESSARY.

NOTES:
1. TURN THE GATE VALVE TO THE CLOSED POSITION.
2. REMOVE THE PIPE AND FITTING BETWEEN THE COUPLING AND THE GATE VALVE. THE GATE VALVES ARE TO REMAIN PRIMARILY TO KEEP THE WATER SERVICE TO THE MEDICAL CENTER FROM BEING INTERRUPTED.
3. INSTALL A DUCTILE IRON MECHANICAL JOINT PLUG ON THE DOWNSTREAM END OF ISOLATION GATE VALVE. USE HARCO VALVE TO FITTING RESTRAINT.
4. CUT EXISTING PIPE AT THE PIT WALL ABANDON EXISTING PVC PIPE IN PLACE.
5. INSTALL A BEAM JACK BETWEEN THE GATE VALVE AND THE WALL OF THE PIT TO ACT AS A THRUST BLOCK FOR THE GATE VALVE FITTINGS.

1 POINT-OF-CONNECTION DEMOLITION DETAIL

N.T.S.

KEYMAP N.T.S.

30' 0' 15' 30' 60'
1" = 30'
SCALE MUST MEASURE 1 INCH OR DRAWING IS NOT TO SCALE.

NORTH

BID DOCUMENTS

Revisions:	Date:

CONSULTANTS:

Aqua Engineering Inc.
Innovative Water Solutions
375 E. Horsetooth Road, Building 2-202
Fort Collins, CO 80525-3196
970.229.9668 office
970.226.3855 fax
www.aquaengineering.com

REGISTERED PROFESSIONAL ENGINEER
REG. NO. 5929
ROBERT W. BECCARD
SOUTH DAKOTA
01/18/2013

ARCHITECT/ENGINEERS:
Kenneth Hahn Architects

Drawing Title: DEMOLITION PLAN	Project Title: RENOVATION IRRIGATION SYSTEM		VA Project Number: 568-13-201
Approved Project Director	Location: HOT SPRINGS, SD		Drawing Number: I-1.2
	Date: JANUARY 18, 2013	Checked: RWB	Drawn: JDL/CAM
			Sheet # 3 of 12

VA BLACK HILLS HEALTH CARE SYSTEM

Department of Veterans Affairs

VA FORM 08-6231

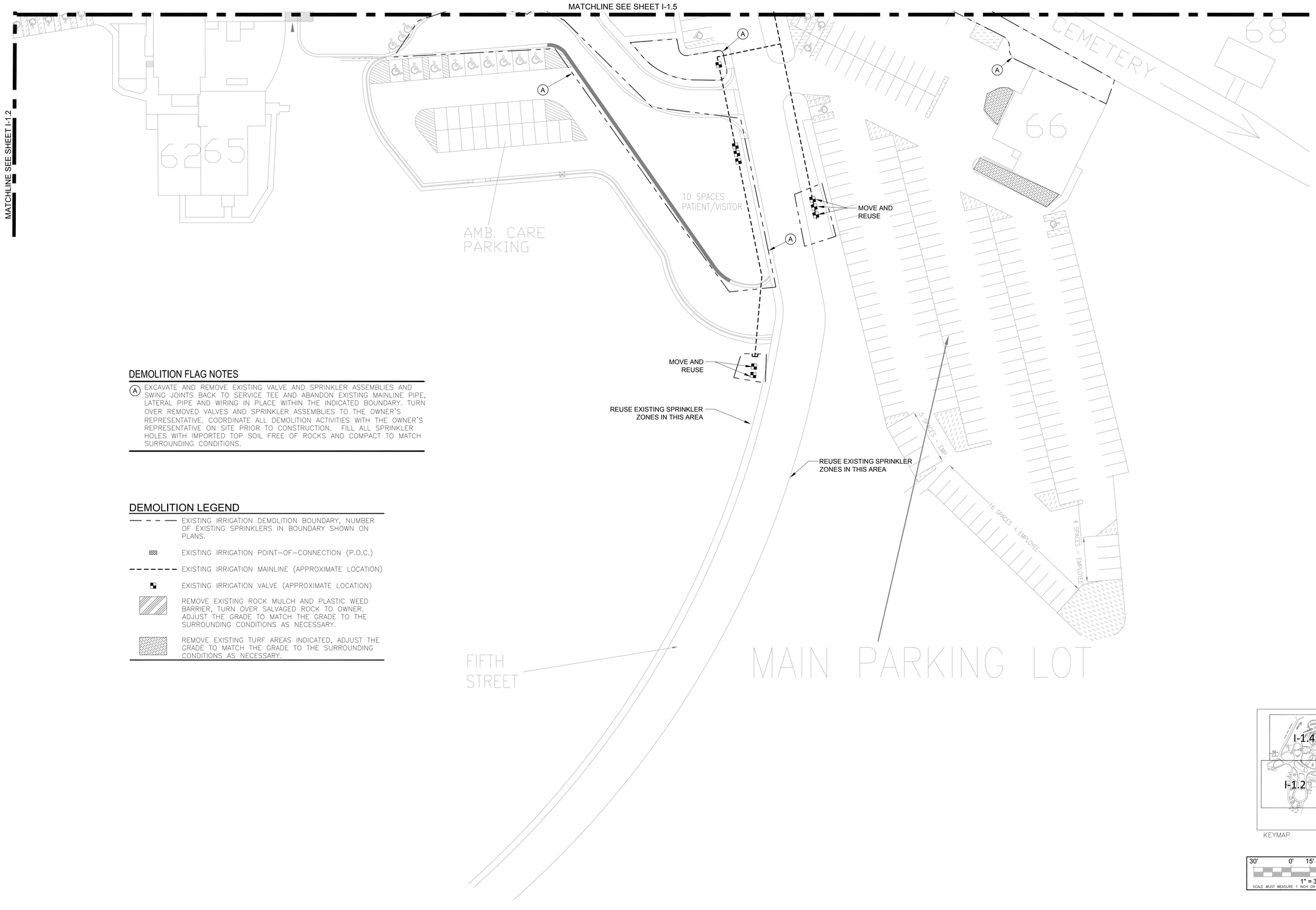

DEMOLITION FLAG NOTES

(A) EXCAVATE AND REMOVE EXISTING VALVE AND SPRINKLER ASSEMBLIES AND SWING JOINTS BACK TO SERVICE TEE AND ABANDON EXISTING MAINLINE PIPE, LATERAL PIPE AND WIRING IN PLACE WITHIN THE INDICATED BOUNDARY. TURN OVER REMOVED VALVES AND SPRINKLER ASSEMBLIES TO THE OWNER'S REPRESENTATIVE. COORDINATE ALL DEMOLITION ACTIVITIES WITH THE OWNER'S REPRESENTATIVE ON SITE PRIOR TO CONSTRUCTION. FILL ALL SPRINKLER HOLES WITH IMPORTED TOP SOIL FREE OF ROCKS AND COMPACT TO MATCH SURROUNDING CONDITIONS.

DEMOLITION LEGEND

- EXISTING IRRIGATION DEMOLITION BOUNDARY, NUMBER OF EXISTING SPRINKLERS IN BOUNDARY SHOWN ON PLANS.
- EXISTING IRRIGATION POINT-OF-CONNECTION (P.O.C.)
- EXISTING IRRIGATION MAINLINE (APPROXIMATE LOCATION)
- EXISTING IRRIGATION VALVE (APPROXIMATE LOCATION)
- REMOVE EXISTING ROCK MULCH AND PLASTIC WEED BARRIER, TURN OVER SALVAGED ROCK TO OWNER. ADJUST THE GRADE TO MATCH THE GRADE TO THE SURROUNDING CONDITIONS AS NECESSARY.
- REMOVE EXISTING TURF AREAS INDICATED, ADJUST THE GRADE TO MATCH THE GRADE TO THE SURROUNDING CONDITIONS AS NECESSARY.

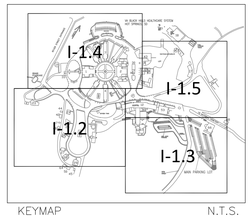

KEYMAP N.T.S.

30' 0' 15' 30' 60'
1" = 30'
SCALE MUST MEASURE 1 INCH ON DRAWING IS NOT TO SCALE.

NORTH

BID DOCUMENTS

Revisions:	Date:

CONSULTANTS:

Aqua Engineering Inc.
Innovative Water Solutions
375 E. Horsetooth Road, Building 2-202
Fort Collins, CO 80525-3196
970.229.9668 office
970.226.3855 fax
www.aquaengineering.com

REGISTERED PROFESSIONAL ENGINEER
REG. NO. 5929
ROBERT W. BECCARD
SOUTH DAKOTA
01/18/2013

ARCHITECT/ENGINEERS:

Kenneth Hahn Architects

Drawing Title: DEMOLITION PLAN	Project Title: RENOVATION IRRIGATION SYSTEM		VA Project Number: 568-13-201
Approved Project Director	Location: HOT SPRINGS, SD		Drawing Number: I-1.3
	Date: JANUARY 18, 2013	Checked: RWB	Drawn: JDL/CAM
			Sheet # 4 of 12

VA BLACK HILLS HEALTH CARE SYSTEM

Department of Veterans Affairs

VA FORM 08-6231

DEMOLITION FLAG NOTES

(A) EXCAVATE AND REMOVE EXISTING VALVE AND SPRINKLER ASSEMBLIES AND SWING JOINTS BACK TO SERVICE TEE AND ABANDON EXISTING MAINLINE PIPE, LATERAL PIPE AND WIRING IN PLACE WITHIN THE INDICATED BOUNDARY. TURN OVER REMOVED VALVES AND SPRINKLER ASSEMBLIES TO THE OWNER'S REPRESENTATIVE. COORDINATE ALL DEMOLITION ACTIVITIES WITH THE OWNER'S REPRESENTATIVE ON SITE PRIOR TO CONSTRUCTION. FILL ALL SPRINKLER HOLES WITH IMPORTED TOP SOIL FREE OF ROCKS AND COMPACT TO MATCH SURROUNDING CONDITIONS.

(B) REFER TO DETAIL 1 SHEET I-1.2 FOR REMOVAL OF EXISTING POINT OF CONNECTION AT THIS LOCATION.

DEMOLITION LEGEND

- EXISTING IRRIGATION DEMOLITION BOUNDARY, NUMBER OF EXISTING SPRINKLERS IN BOUNDARY SHOWN ON PLANS.
- EXISTING IRRIGATION POINT-OF-CONNECTION (P.O.C.)
- EXISTING IRRIGATION MAINLINE (APPROXIMATE LOCATION)
- EXISTING IRRIGATION VALVE (APPROXIMATE LOCATION)
- REMOVE EXISTING ROCK MULCH AND PLASTIC WEED BARRIER, TURN OVER SALVAGED ROCK TO OWNER. ADJUST THE GRADE TO MATCH THE GRADE TO THE SURROUNDING CONDITIONS AS NECESSARY.
- REMOVE EXISTING TURF AREAS INDICATED, ADJUST THE GRADE TO MATCH THE GRADE TO THE SURROUNDING CONDITIONS AS NECESSARY.

KEYMAP N.T.S.

30' 0' 15' 30' 60'
1" = 30'
SCALE MUST MEASURE 1 INCH OR DRAWING IS NOT TO SCALE.

NORTH

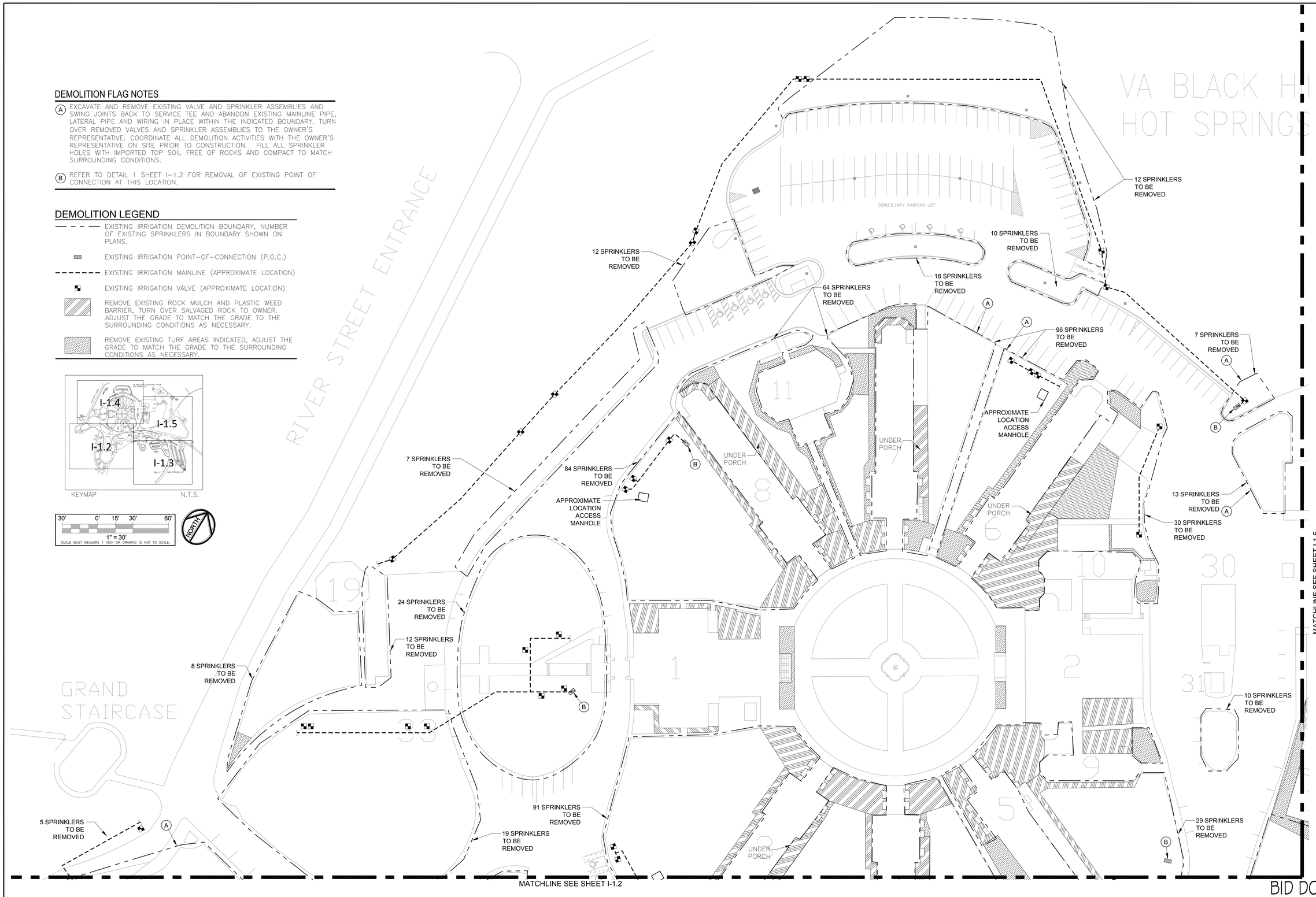

BID DOCUMENTS

Revisions:	Date:

CONSULTANTS:

Aqua Engineering Inc.
Innovative Water Solutions
375 E. Horsetooth Road, Building 2-202
Fort Collins, CO 80525-3196
970.229.9688 office
970.226.3855 fax
www.aquaengineering.com

REGISTERED PROFESSIONAL ENGINEER
REG. NO. 5929
ROBERT W. BECCARD
SOUTH DAKOTA
01/18/2013

ARCHITECT/ENGINEERS:

Kenneth Hahn Architects

Drawing Title: DEMOLITION PLAN	Project Title: RENOVATION IRRIGATION SYSTEM		VA Project Number: 568-13-201
Approved Project Director	Location: HOT SPRINGS, SD		Drawing Number: I-1.4
	Date: JANUARY 18, 2013	Checked: RWB	Drawn: JDL/CAM
			Sheet # 5 of 12

VA BLACK HILLS HEALTH CARE SYSTEM

Department of Veterans Affairs

VA FORM 08-6231

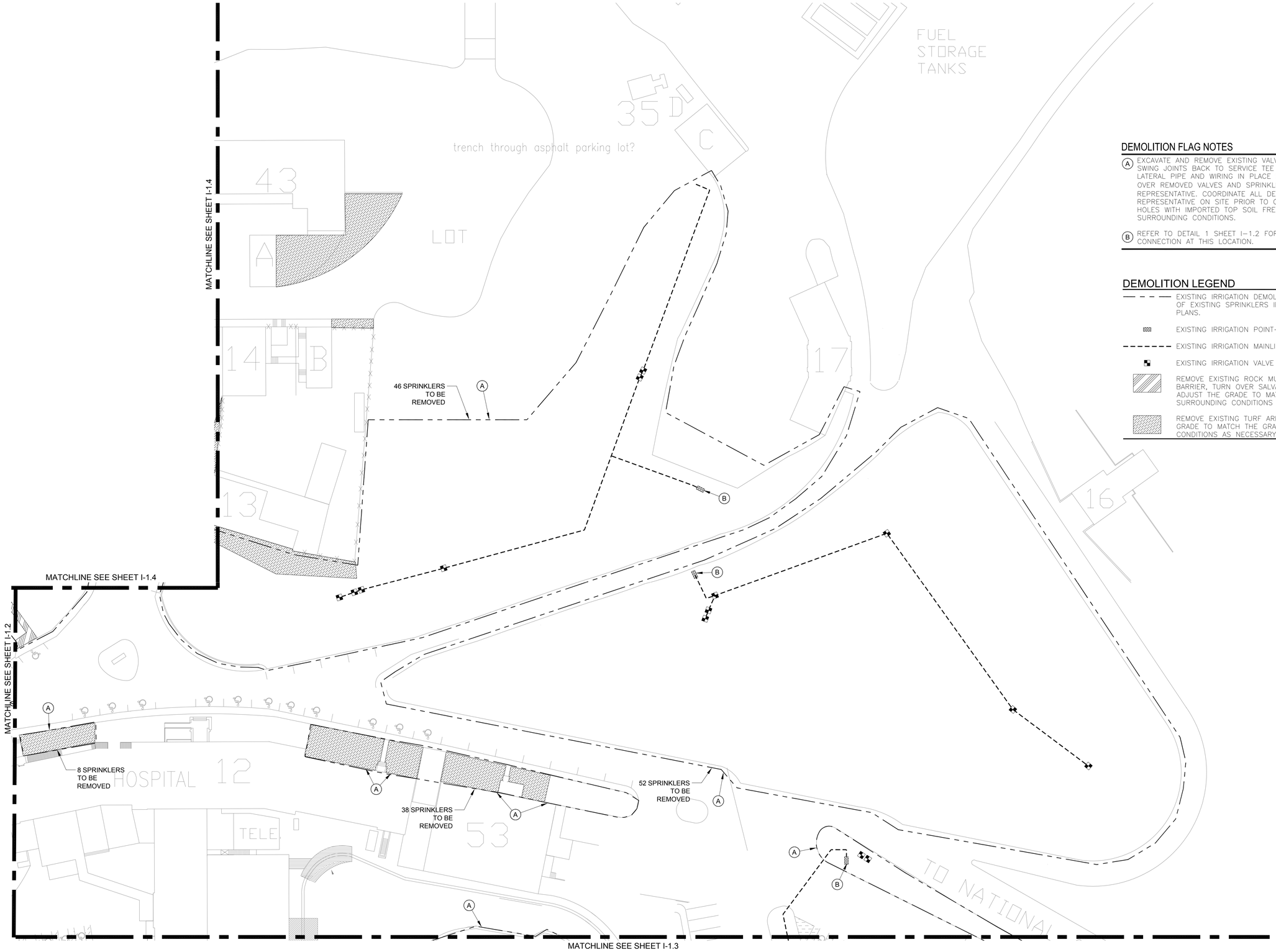

DEMOLITION FLAG NOTES

(A) EXCAVATE AND REMOVE EXISTING VALVE AND SPRINKLER ASSEMBLIES AND SWING JOINTS BACK TO SERVICE TEE AND ABANDON EXISTING MAINLINE PIPE, LATERAL PIPE AND WIRING IN PLACE WITHIN THE INDICATED BOUNDARY. TURN OVER REMOVED VALVES AND SPRINKLER ASSEMBLIES TO THE OWNER'S REPRESENTATIVE. COORDINATE ALL DEMOLITION ACTIVITIES WITH THE OWNER'S REPRESENTATIVE ON SITE PRIOR TO CONSTRUCTION. FILL ALL SPRINKLER HOLES WITH IMPORTED TOP SOIL FREE OF ROCKS AND COMPACT TO MATCH SURROUNDING CONDITIONS.

(B) REFER TO DETAIL 1 SHEET I-1.2 FOR REMOVAL OF EXISTING POINT OF CONNECTION AT THIS LOCATION.

DEMOLITION LEGEND

- EXISTING IRRIGATION DEMOLITION BOUNDARY, NUMBER OF EXISTING SPRINKLERS IN BOUNDARY SHOWN ON PLANS.
- EXISTING IRRIGATION POINT-OF-CONNECTION (P.O.C.)
- EXISTING IRRIGATION MAINLINE (APPROXIMATE LOCATION)
- EXISTING IRRIGATION VALVE (APPROXIMATE LOCATION)
- REMOVE EXISTING ROCK MULCH AND PLASTIC WEED BARRIER, TURN OVER SALVAGED ROCK TO OWNER. ADJUST THE GRADE TO MATCH THE GRADE TO THE SURROUNDING CONDITIONS AS NECESSARY.
- REMOVE EXISTING TURF AREAS INDICATED, ADJUST THE GRADE TO MATCH THE GRADE TO THE SURROUNDING CONDITIONS AS NECESSARY.

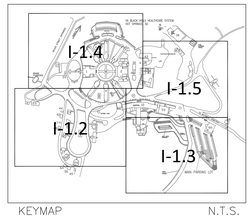

KEYMAP N.T.S.

30' 0' 15' 30' 60'
1" = 30'
SCALE MUST MEASURE 1 INCH OR DRAWING IS NOT TO SCALE.

NORTH

BID DOCUMENTS

Revisions:	Date:

CONSULTANTS:

Aqua Engineering Inc.
Innovative Water Solutions
375 E. Horsetooth Road, Building 2-202
Fort Collins, CO 80525-3196
970.229.9968 office
970.226.3855 fax
www.aquaengineering.com

REGISTERED PROFESSIONAL ENGINEER
REG. NO. 5929
ROBERT W. BECCARD
SOUTH DAKOTA
01/18/2013

ARCHITECT/ENGINEERS:

Kenneth Hahn Architects

Drawing Title	DEMOLITION PLAN
Project Title	RENOVATION IRRIGATION SYSTEM
VA Project Number	568-13-201
Approved Project Director	
Location	HOT SPRINGS, SD
Date	JANUARY 18, 2013
Checked	RWB
Drawn	JDL/CAM
Drawing Number	I-1.5
Sheet # 6 of 12	

VA BLACK HILLS HEALTH CARE SYSTEM

Department of Veterans Affairs

VA FORM 08-6231

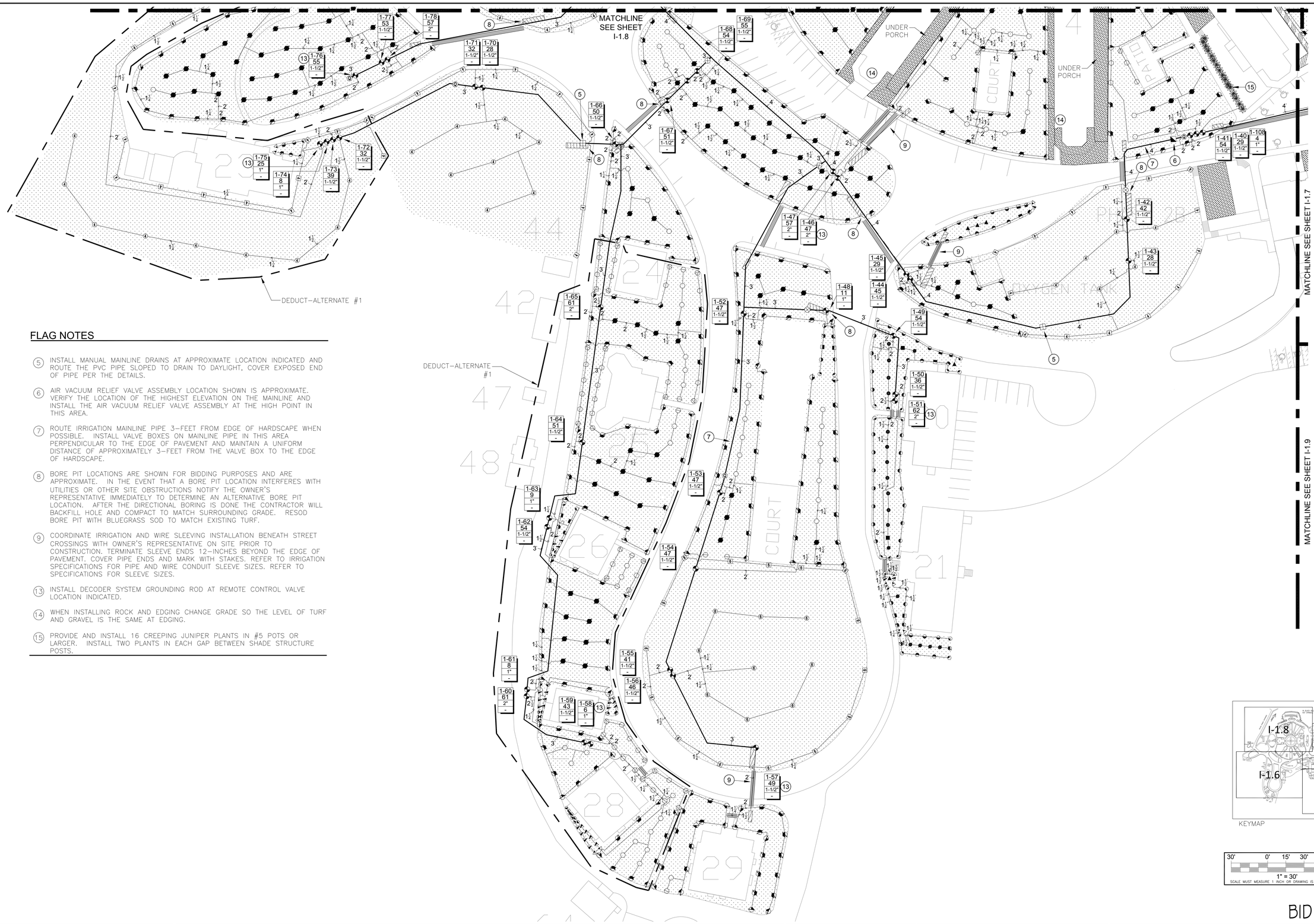

FLAG NOTES

(5) INSTALL MANUAL MAINLINE DRAINS AT APPROXIMATE LOCATION INDICATED AND ROUTE THE PVC PIPE SLOPED TO DRAIN TO DAYLIGHT, COVER EXPOSED END OF PIPE PER THE DETAILS.

(6) AIR VACUUM RELIEF VALVE ASSEMBLY LOCATION SHOWN IS APPROXIMATE. VERIFY THE LOCATION OF THE HIGHEST ELEVATION ON THE MAINLINE AND INSTALL THE AIR VACUUM RELIEF VALVE ASSEMBLY AT THE HIGH POINT IN THIS AREA.

(7) ROUTE IRRIGATION MAINLINE PIPE 3–FEET FROM EDGE OF HARDSCAPE WHEN POSSIBLE. INSTALL VALVE BOXES ON MAINLINE PIPE IN THIS AREA PERPENDICULAR TO THE EDGE OF PAVEMENT AND MAINTAIN A UNIFORM DISTANCE OF APPROXIMATELY 3–FEET FROM THE VALVE BOX TO THE EDGE OF HARDSCAPE.

(8) BORE PIT LOCATIONS ARE SHOWN FOR BIDDING PURPOSES AND ARE APPROXIMATE. IN THE EVENT THAT A BORE PIT LOCATION INTERFERES WITH UTILITIES OR OTHER SITE OBSTRUCTIONS NOTIFY THE OWNER'S REPRESENTATIVE IMMEDIATELY TO DETERMINE AN ALTERNATIVE BORE PIT LOCATION. AFTER THE DIRECTIONAL BORING IS DONE THE CONTRACTOR WILL BACKFILL HOLE AND COMPACT TO MATCH SURROUNDING GRADE. RESOD BORE PIT WITH BLUEGRASS SOD TO MATCH EXISTING TURF.

(9) COORDINATE IRRIGATION AND WIRE SLEEVING INSTALLATION BENEATH STREET CROSSINGS WITH OWNER'S REPRESENTATIVE ON SITE PRIOR TO CONSTRUCTION. TERMINATE SLEEVE ENDS 12–INCHES BEYOND THE EDGE OF PAVEMENT. COVER PIPE ENDS AND MARK WITH STAKES. REFER TO IRRIGATION SPECIFICATIONS FOR PIPE AND WIRE CONDUIT SLEEVE SIZES. REFER TO SPECIFICATIONS FOR SLEEVE SIZES.

(13) INSTALL DECODER SYSTEM GROUNDING ROD AT REMOTE CONTROL VALVE LOCATION INDICATED.

(14) WHEN INSTALLING ROCK AND EDGING CHANGE GRADE SO THE LEVEL OF TURF AND GRAVEL IS THE SAME AT EDGING.

(15) PROVIDE AND INSTALL 16 CREEPING JUNIPER PLANTS IN #5 POTS OR LARGER. INSTALL TWO PLANTS IN EACH GAP BETWEEN SHADE STRUCTURE POSTS.

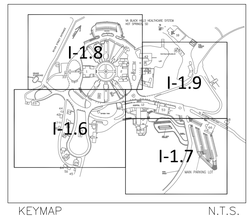

KEYMAP N.T.S.

30' 0' 15' 30' 60'
1" = 30'
SCALE MUST MEASURE 1 INCH OR DRAWING IS NOT TO SCALE.

NORTH

BID DOCUMENTS

Revisions:	Date:

CONSULTANTS:

Aqua Engineering Inc.
Innovative Water Solutions
375 E. Horsetooth Road, Building 2-202
Fort Collins, CO 80525-3196
970.229.9688 office
970.226.3855 fax
www.aquaengineering.com

REGISTERED PROFESSIONAL ENGINEER
REG. NO. 5929
ROBERT W. BECCARD
SOUTH DAKOTA
01/18/2013

ARCHITECT/ENGINEERS:

Kenneth Hahn Architects

Drawing Title: IRRIGATION PLAN	Project Title: RENOVATION IRRIGATION SYSTEM		VA Project Number: 568-13-201
Approved Project Director	Location: HOT SPRINGS, SD		Drawing Number: I-1.6
	Date: JANUARY 18, 2013	Checked: RWB	Drawn: JDL/CAM
			Sheet # 7 of 12

VA BLACK HILLS HEALTH CARE SYSTEM

Department of Veterans Affairs

VA FORM 08-6231

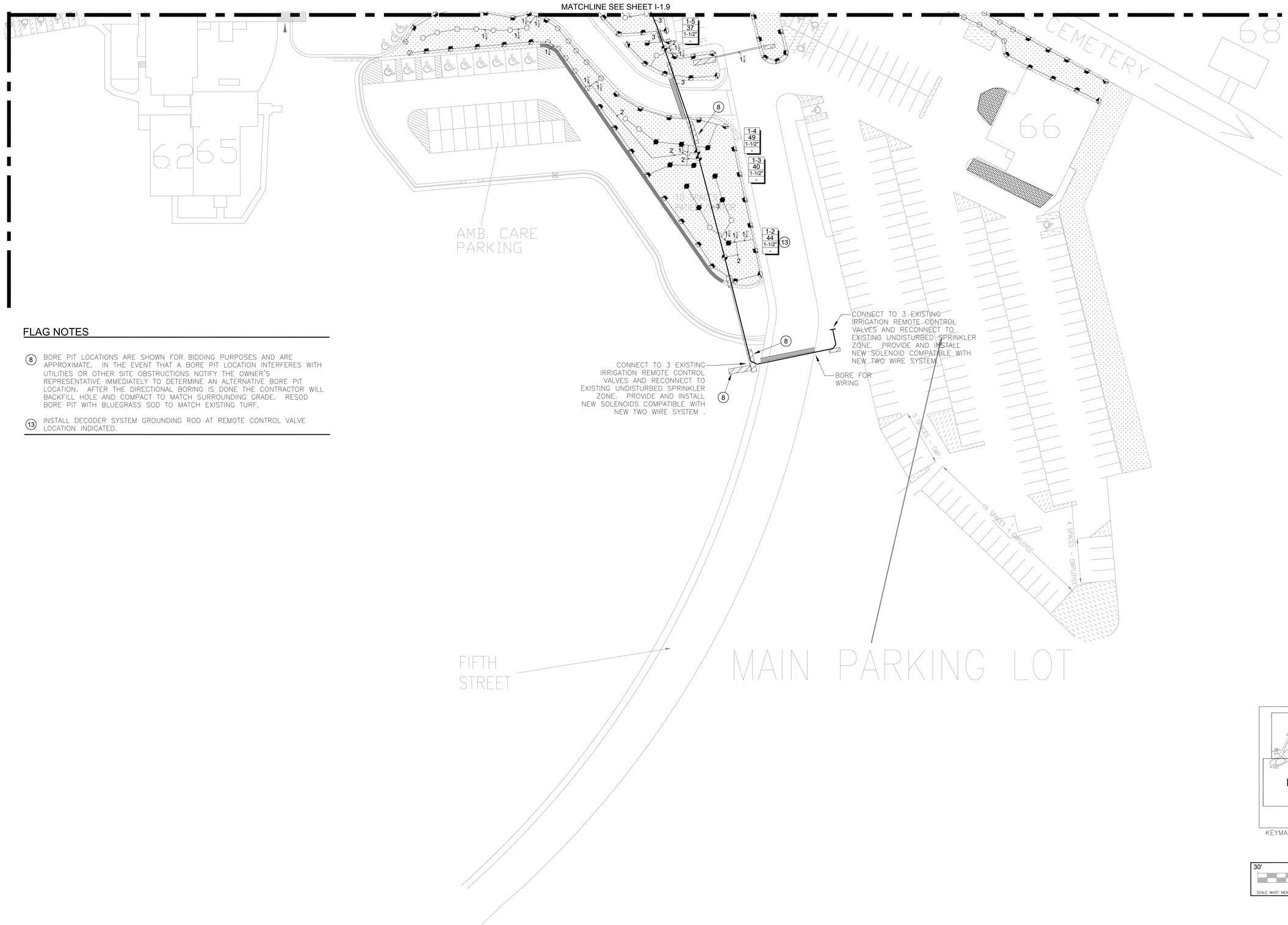

FLAG NOTES

(8) BORE PIT LOCATIONS ARE SHOWN FOR BIDDING PURPOSES AND ARE APPROXIMATE. IN THE EVENT THAT A BORE PIT LOCATION INTERFERES WITH UTILITIES OR OTHER SITE OBSTRUCTIONS NOTIFY THE OWNER'S REPRESENTATIVE IMMEDIATELY TO DETERMINE AN ALTERNATIVE BORE PIT LOCATION. AFTER THE DIRECTIONAL BORING IS DONE THE CONTRACTOR WILL BACKFILL HOLE AND COMPACT TO MATCH SURROUNDING GRADE. RESOD BORE PIT WITH BLUEGRASS SOD TO MATCH EXISTING TURF.

(13) INSTALL DECODER SYSTEM GROUNDING ROD AT REMOTE CONTROL VALVE LOCATION INDICATED.

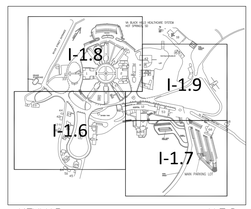

KEYMAP N.T.S.

30' 0' 15' 30' 60'
1" = 30'
SCALE MUST MEASURE 1 INCH OR DRAWING IS NOT TO SCALE.

NORTH

BID DOCUMENTS

Revisions:	Date:

CONSULTANTS:

Aqua Engineering Inc.
Innovative Water Solutions
375 E. Horsetooth Road, Building 2-202
Fort Collins, CO 80525-3196
970.229.9668 office
970.226.3855 fax
www.aquaengineering.com

REGISTERED PROFESSIONAL ENGINEER
REG. NO. 5929
ROBERT W. BECCARD
SOUTH DAKOTA
01/18/2013

ARCHITECT/ENGINEERS:
Kenneth Hahn Architects

Drawing Title	IRRIGATION PLAN
Approved Project Director	
Project Title	RENOVATION IRRIGATION SYSTEM
Location	HOT SPRINGS, SD
Date	JANUARY 18, 2013
Checked	RWB
Drawn	JDL/CAM
VA Project Number	568-13-201
Drawing Number	I-1.7
Sheet # 8 of 12	

VA BLACK HILLS HEALTH CARE SYSTEM

Department of Veterans Affairs

VA FORM 08-6231

FLAG NOTES

(2) POINT OF CONNECTION 2: EXCAVATE AND EXPOSE THE EXISTING 1-INCH GALVANIZED OR COPPER PIPE AT THE APPROXIMATE LOCATION SHOWN. USE THREADED FITTING AND DIELECTRIC UNION TO TRANSITION TO 1-INCH COPPER PIPE AND BRING PIPE ABOVE GRADE. INSTALL PRESSURE VACUUM BREAKER BACKFLOW DEVICE AND ROUTE COPPER PIPE DOWNSTREAM OF THE BACKFLOW BELOW GRADE. TRANSITION TO CL200 PVC MAINLINE PIPE IN THE CENTER COURTYARD ONLY.

(5) INSTALL MANUAL MAINLINE DRAINS AT APPROXIMATE LOCATION INDICATED AND ROUTE THE PVC PIPE SLOPED TO DRAIN TO DAYLIGHT, COVER EXPOSED END OF PIPE PER THE DETAILS.

(6) AIR VACUUM RELIEF VALVE ASSEMBLY LOCATION SHOWN IS APPROXIMATE. VERIFY THE LOCATION OF THE HIGHEST ELEVATION ON THE MAINLINE AND INSTALL THE AIR VACUUM RELIEF VALVE ASSEMBLY AT THE HIGH POINT IN THIS AREA.

(7) ROUTE IRRIGATION MAINLINE PIPE 3-FEET FROM EDGE OF HARDSCAPE WHEN POSSIBLE. INSTALL VALVE BOXES ON MAINLINE PIPE IN THIS AREA PERPENDICULAR TO THE EDGE OF PAVEMENT AND MAINTAIN A UNIFORM DISTANCE OF APPROXIMATELY 3-FEET FROM THE VALVE BOX TO THE EDGE OF HARDSCAPE.

(8) BORE PIT LOCATIONS ARE SHOWN FOR BIDDING PURPOSES AND ARE APPROXIMATE. IN THE EVENT THAT A BORE PIT LOCATION INTERFERES WITH UTILITIES OR OTHER SITE OBSTRUCTIONS NOTIFY THE OWNER'S REPRESENTATIVE IMMEDIATELY TO DETERMINE AN ALTERNATIVE BORE PIT LOCATION. AFTER THE DIRECTIONAL BORING IS DONE THE CONTRACTOR WILL BACKFILL HOLE AND COMPACT TO MATCH SURROUNDING GRADE. RESOD BORE PIT WITH BLUEGRASS SOD TO MATCH EXISTING TURF.

(9) COORDINATE IRRIGATION AND WIRE SLEEVING INSTALLATION BENEATH STREET CROSSINGS WITH OWNER'S REPRESENTATIVE ON SITE PRIOR TO CONSTRUCTION. TERMINATE SLEEVE ENDS 12-INCHES BEYOND THE EDGE OF PAVEMENT. COVER PIPE ENDS AND MARK WITH STAKES. REFER TO IRRIGATION SPECIFICATIONS FOR PIPE AND WIRE CONDUIT SLEEVE SIZES. REFER TO SPECIFICATIONS FOR SLEEVE SIZES.

(10) REFER TO DETAILS AND SPECIFICATIONS FOR FLOW SENSOR INSTALLATION. FLOW SENSORS WILL BE SENDING THE PULSE SIGNAL BACK TO A PULSE READER IN BUILDING 13 SO THE MONTHLY FLOW CAN BE RECORDED.

(11) PROVIDE AND INSTALL EROSION CONTROL MAT ON THE DOWNHILL SIDE OF THE TRENCHES, USE ENOUGH MAT TO TRAP ANY SEDIMENT THAT MAY BE WASHED OUT THE TRENCHES ONT HE DOWNHILL SIDE OR DURING A RAIN EVENT.

(13) INSTALL DECODER SYSTEM GROUNDING ROD AT REMOTE CONTROL VALVE LOCATION INDICATED.

(14) WHEN INSTALLING ROCK AND EDGING CHANGE GRADE SO THE LEVEL OF TURF AND GRAVEL IS THE SAME AT EDGING.

KEYMAP N.T.S.

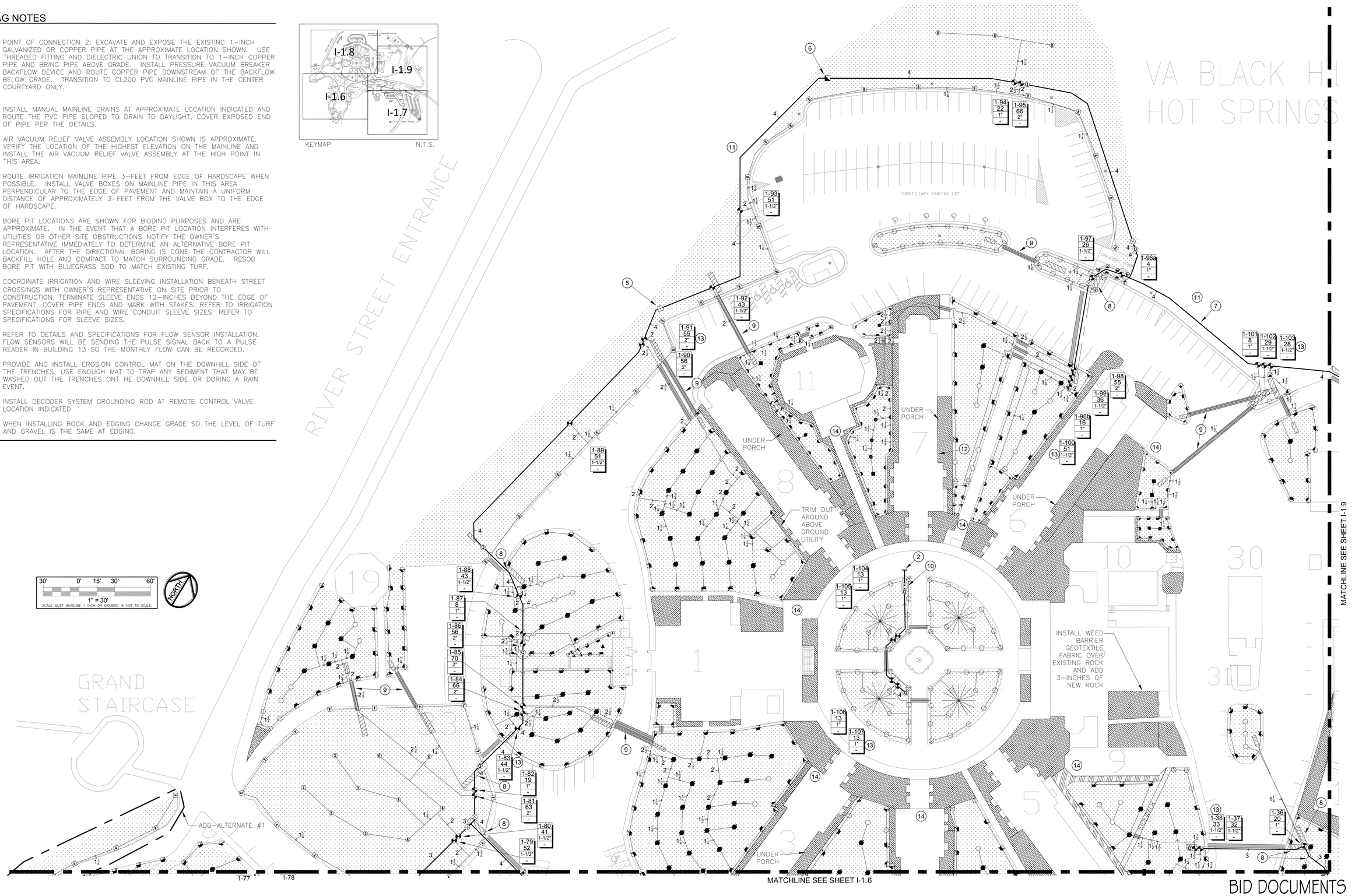

BID DOCUMENTS

Revisions:	Date:

CONSULTANTS:

Aqua Engineering Inc.
Innovative Water Solutions
375 E. Horsetooth Road, Building 2-202
Fort Collins, CO 80525-3196
970.229.9668 office
970.226.3855 fax
www.aquaengineering.com

REGISTERED PROFESSIONAL ENGINEER
REG. NO. 5929
ROBERT W. BECCARD
SOUTH DAKOTA
01/18/2013

ARCHITECT/ENGINEERS:

Kenneth Hahn Architects

Drawing Title: IRRIGATION PLAN	Project Title: RENOVATION IRRIGATION SYSTEM		VA Project Number: 568-13-201
Approved Project Director	Location: HOT SPRINGS, SD		Drawing Number: I-1.8
	Date: JANUARY 18, 2013	Checked: RWB	Drawn: JDL/CAM
			Sheet # 9 of 12

VA BLACK HILLS HEALTH CARE SYSTEM

Department of Veterans Affairs

VA FORM 08-6231

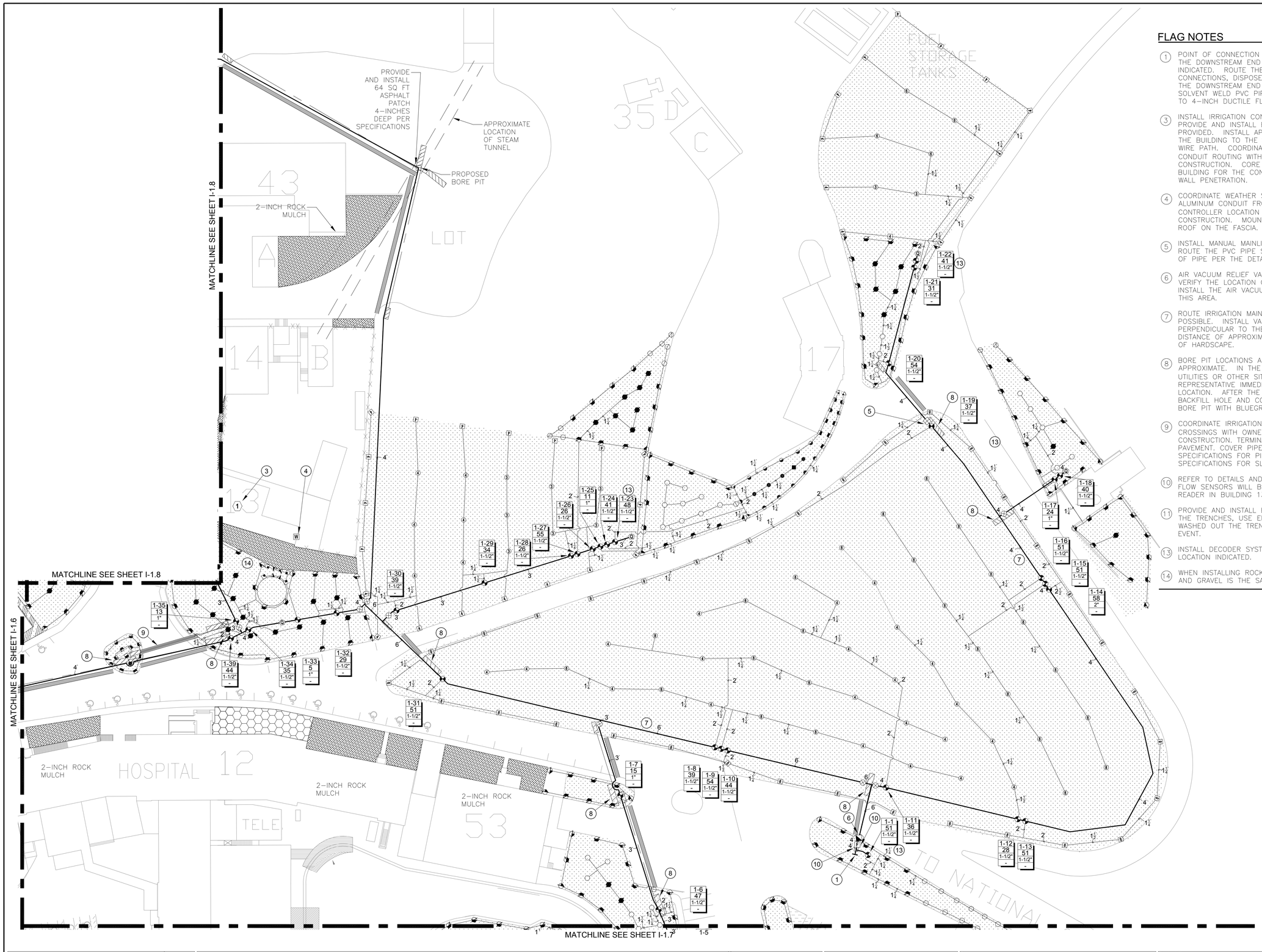

FLAG NOTES

1. POINT OF CONNECTION 1: USING 4-INCH DUCTILE IRON PIPE, CONNECT TO THE DOWNSTREAM END OF THE ISOLATION GATE VALVE IN THE WATER PIT INDICATED. ROUTE THE PIPE TO THE BACKFLOW AND MAKE THE FLANGE CONNECTIONS, DISPOSE OF THE EXISTING SOLVENT WELD PVC PIPE. FROM THE DOWNSTREAM END OF THE EXISTING BACKFLOW REMOVE THE EXISTING SOLVENT WELD PVC PIPE. REPLACE THE PVC PIPE WITH DUCTILE IRON PIPE TO 4-INCH DUCTILE FLANGED IRON EL BELOW GRADE.

3. INSTALL IRRIGATION CONTROLLER ASSEMBLY IN OFFICE OF BUILDING 13, PROVIDE AND INSTALL ELECTRICAL CORD FROM CONTROLLER TO OUTLET PROVIDED. INSTALL APPROXIMATELY 45-FEET OF ALUMINUM CONDUIT INSIDE THE BUILDING TO THE SOUTHERN EXTERIOR WALL FOR DECODER CONTROL WIRE PATH. COORDINATE EXACT LOCATION ON WALL FOR CONTROLLER AND CONDUIT ROUTING WITH OWNER'S REPRESENTATIVE ON SITE PRIOR TO CONSTRUCTION. CORE DRILL THE STONE WALL ON THE SOUTH SIDE OF THE BUILDING FOR THE CONDUIT. PROVIDE A WATERPROOF SEAL AROUND THE WALL PENETRATION.

4. COORDINATE WEATHER STATION AND COMMUNICATION WIRE ROUTING IN 1-INCH ALUMINUM CONDUIT FROM THE WEATHER SENSOR TO THE IRRIGATION CONTROLLER LOCATION OWNER'S REPRESENTATIVE ON SITE PRIOR TO CONSTRUCTION. MOUNT WEATHER STATION ON THE NORTH PEAK OF THE ROOF ON THE FASCIA.

5. INSTALL MANUAL MAINLINE DRAINS AT APPROXIMATE LOCATION INDICATED AND ROUTE THE PVC PIPE SLOPED TO DRAIN TO DAYLIGHT, COVER EXPOSED END OF PIPE PER THE DETAILS.

6. AIR VACUUM RELIEF VALVE ASSEMBLY LOCATION SHOWN IS APPROXIMATE. VERIFY THE LOCATION OF THE HIGHEST ELEVATION ON THE MAINLINE AND INSTALL THE AIR VACUUM RELIEF VALVE ASSEMBLY AT THE HIGH POINT IN THIS AREA.

7. ROUTE IRRIGATION MAINLINE PIPE 3-FEET FROM EDGE OF HARDSCAPE WHEN POSSIBLE. INSTALL VALVE BOXES ON MAINLINE PIPE IN THIS AREA PERPENDICULAR TO THE EDGE OF PAVEMENT AND MAINTAIN A UNIFORM DISTANCE OF APPROXIMATELY 3-FEET FROM THE VALVE BOX TO THE EDGE OF HARDSCAPE.

8. BORE PIT LOCATIONS ARE SHOWN FOR BIDDING PURPOSES AND ARE APPROXIMATE. IN THE EVENT THAT A BORE PIT LOCATION INTERFERES WITH UTILITIES OR OTHER SITE OBSTRUCTIONS NOTIFY THE OWNER'S REPRESENTATIVE IMMEDIATELY TO DETERMINE AN ALTERNATIVE BORE PIT LOCATION. AFTER THE DIRECTIONAL BORING IS DONE THE CONTRACTOR WILL BACKFILL HOLE AND COMPACT TO MATCH SURROUNDING GRADE. RESOD BORE PIT WITH BLUEGRASS SOD TO MATCH EXISTING TURF.

9. COORDINATE IRRIGATION AND WIRE SLEEVING INSTALLATION BENEATH STREET CROSSINGS WITH OWNER'S REPRESENTATIVE ON SITE PRIOR TO CONSTRUCTION. TERMINATE SLEEVE ENDS 12-INCHES BEYOND THE EDGE OF PAVEMENT. COVER PIPE ENDS AND MARK WITH STAKES. REFER TO IRRIGATION SPECIFICATIONS FOR PIPE AND WIRE CONDUIT SLEEVE SIZES. REFER TO SPECIFICATIONS FOR SLEEVE SIZES.

10. REFER TO DETAILS AND SPECIFICATIONS FOR FLOW SENSOR INSTALLATION. FLOW SENSORS WILL BE SENDING THE PULSE SIGNAL BACK TO A PULSE READER IN BUILDING 13 SO THE MONTHLY FLOW CAN BE RECORDED.

11. PROVIDE AND INSTALL EROSION CONTROL MAT ON THE DOWNHILL SIDE OF THE TRENCHES, USE ENOUGH MAT TO TRAP ANY SEDIMENT THAT MAY BE WASHED OUT THE TRENCHES ON THE DOWNHILL SIDE OR DURING A RAIN EVENT.

13. INSTALL DECODER SYSTEM GROUNDING ROD AT REMOTE CONTROL VALVE LOCATION INDICATED.

14. WHEN INSTALLING ROCK AND EDGING CHANGE GRADE SO THE LEVEL OF TURF AND GRAVEL IS THE SAME AT EDGING.

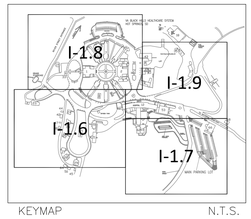

KEYMAP N.T.S.

30' 0' 15' 30' 60'
1" = 30'
SCALE MUST MEASURE 1 INCH OR DRAWING IS NOT TO SCALE.

NORTH

BID DOCUMENTS

Revisions:	Date:

CONSULTANTS:

Aqua Engineering Inc.
Innovative Water Solutions
375 E. Horsetooth Road, Building 2-202
Fort Collins, CO 80525-3196
970.229.9668 office
970.226.3855 fax
www.aquaengineering.com

REGISTERED PROFESSIONAL ENGINEER
REG. NO. 5929
ROBERT W. BECCARD
SOUTH DAKOTA
01/18/2013

ARCHITECT/ENGINEERS:

Kenneth Hahn Architects

Drawing Title: IRRIGATION PLAN	Project Title: RENOVATION IRRIGATION SYSTEM		VA Project Number: 568-13-201
Approved Project Director	Location: HOT SPRINGS, SD		Drawing Number: I-1.9
	Date: JANUARY 18, 2013	Checked: RWB	Drawn: JDL/CAM
			Sheet # 10 of 12

VA BLACK HILLS HEALTH CARE SYSTEM

Department of Veterans Affairs

VA FORM 08-6231

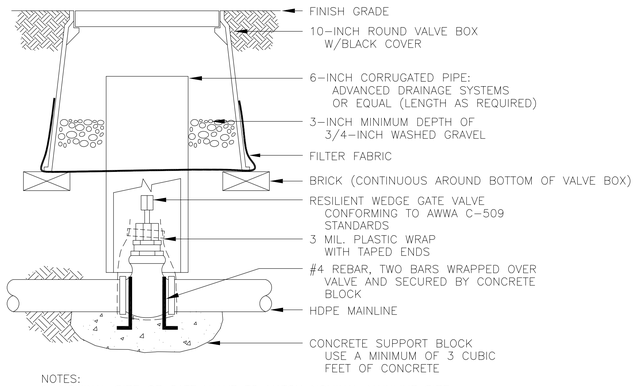

NOTES:
1. NOMINAL SIZE OF GATE VALVE TO MATCH NOMINAL MAINLINE SIZE.
2. INSTALL A 4-INCH THICK CONCRETE PAD BELOW VALVE WITH NO. 4 REBAR WHEN USING PUSH-ON TYPE VALVES.
3. RESILIENT WEDGE GATE VALVE MAY HAVE EITHER MECHANICAL JOINT OR PUSH-ON GASKETED ENDS. THE OPERATOR IS A WRENCH NUT.
4. ANCHOR ISOLATION VALVE TO CONCRETE BY BENDING REBAR OVER EACH END OF VALVE AND EXTENDING A MINIMUM OF 6-INCHES INTO CONCRETE SUPPORT BLOCK.
5. WRAP VALVE ENDS AND BODY IN 3 MIL. PLASTIC PRIOR TO POURING CONCRETE.
6. CONCRETE SUPPORT BLOCK IS TO BE POURED UNDER ISOLATION GATE VALVE. ONLY THE BOTTOM OF THE ISOLATION GATE VALVE TO BE IN CONTACT WITH CONCRETE.
7. INSTALL FILTER FABRIC AROUND EXTERIOR OF VALVE BOX. USE DUCT TAPE TO SECURE FABRIC TO PIPE AND VALVE BOX.
8. BRAND VALVE BOX COVER PER SPECIFICATIONS.

1 ISOLATION GATE VALVE ASSEMBLY

N.T.S.

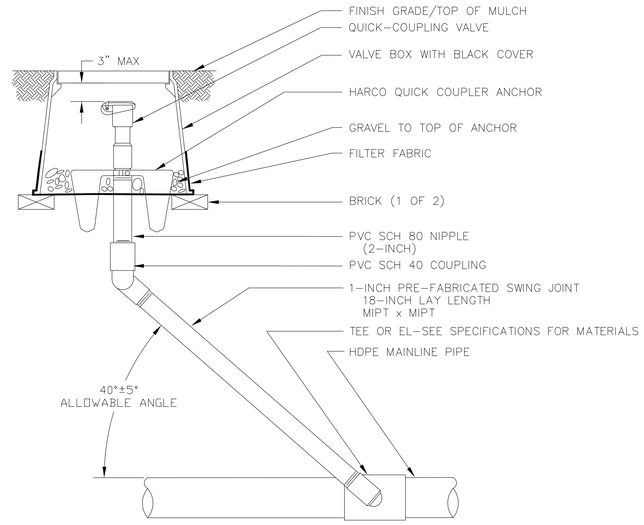

NOTE:
1. FURNISH FITTINGS AND PIPING NOMINALLY SIZED IDENTICAL TO NOMINAL QUICK COUPLING VALVE INLET SIZE.
2. BRAND VALVE BOX COVER PER SPECIFICATIONS.

2 QUICK COUPLING VALVE ASSEMBLY

N.T.S.

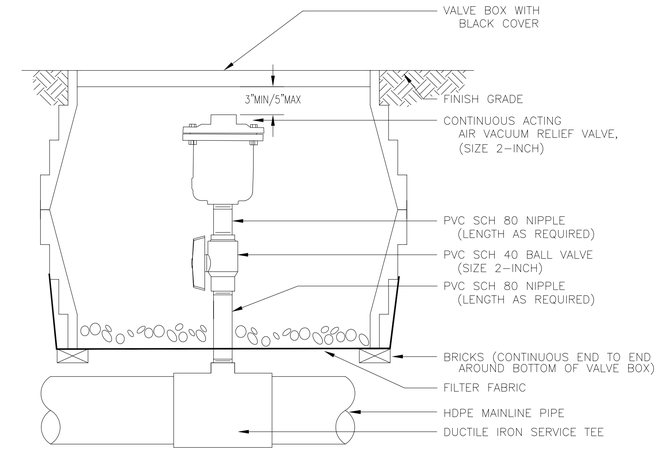

NOTES:
1. INSTALL VALVE BOX SO THERE IS A CLEARANCE OF 2" BETWEEN THE BOTTOM OF THE VALVE BOX AND THE MAINLINE PIPE.
2. INSTALL FILTER FABRIC AROUND EXTERIOR OF VALVE BOX. USE DUCT TAPE TO SECURE FABRIC TO PIPE AND VALVE BOX.
3. BRAND VALVE BOX COVER PER SPECIFICATIONS.

3 AIR-VACUUM RELIEF VALVE ASSEMBLY

N.T.S.

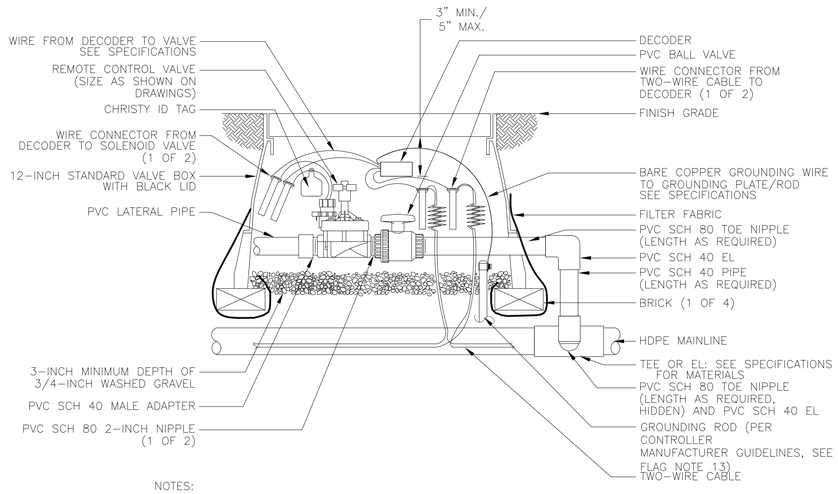

NOTES:
1. USE VALVE BOX EXTENSION AS NECESSARY TO ACHIEVE MINIMUM DIMENSIONS ABOVE ASSEMBLY.
2. NOMINAL SIZE OF ALL COMPONENTS ARE TO BE THE SAME NOMINAL SIZE AS THE SOLENOID VALVE (SIZED AS SHOWN).
3. TRANSITION TO PROPER LATERAL PIPE BURIAL DEPTH USING PVC SCH 40 SOLVENT WELD FITTINGS DOWNSTREAM OF REMOTE CONTROL VALVE ASSEMBLY.
4. INSTALL PRESSURE REGULATOR ON ALL REMOTE CONTROL VALVES. SET PRESSURE MODULE TO INDICATED PRESSURE ON LEGEND PER MANUFACTURER'S RECOMMENDATIONS.
5. INSTALL FILTER FABRIC AROUND EXTERIOR OF VALVE BOX. USE DUCT TAPE TO SECURE FABRIC TO PIPE AND VALVE BOX.
6. BRAND VALVE BOX COVER PER SPECIFICATIONS.
7. DO NOT ALLOW VALVE BOX SIDES TO REST ON PIPE.
8. POSITION VALVE BOX OVER VALVE TO ALLOW OPERATION OF SOLENOID AND BALL VALVES.
9. REFER TO SPECIFICATIONS FOR PIPE DEPTH.

4 REMOTE CONTROL VALVE ASSEMBLY

N.T.S.

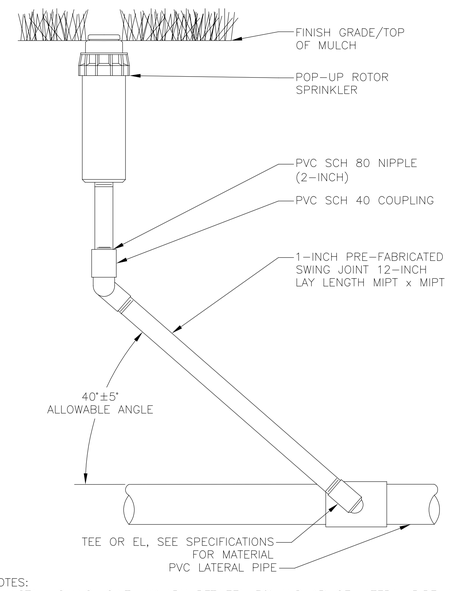

NOTES:
1. INSTALL SWING JOINT LAY ARM BETWEEN 30° AND 45° OF LATERAL PIPE IN ORDER TO ABSORB DOWNWARD IMPACT. IF SWING JOINT CAN NOT BE INSTALLED AT SPECIFIED ANGLE, CONSULT RESIDENT ENGINEER PRIOR TO INSTALLATION OF SWING JOINT.

5 POP-UP ROTOR SPRINKLER ASSEMBLY

N.T.S.

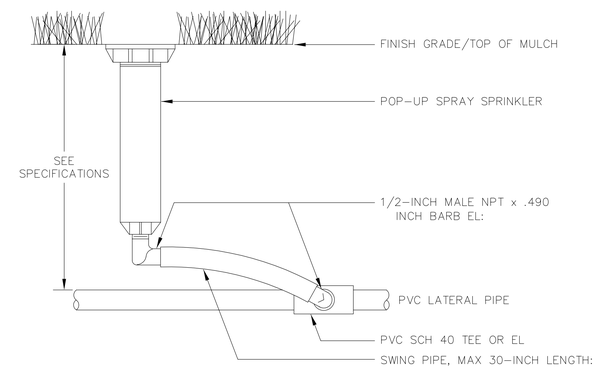

NOTES:
1. INSTALL 4-INCH POP-UP HEIGHT IN TURF AREAS.
2. INSTALL 12-INCH POP-UP HEIGHT IN LANDSCAPED AREAS.
3. USE NO MORE THAN 24 INCHES OF SWING PIPE PER SPRINKLER.

6 POP-UP SPRAY SPRINKLER ASSEMBLY

N.T.S.

BID DOCUMENTS

Revisions:	Date:

CONSULTANTS:

Aqua Engineering Inc.
Innovative Water Solutions
375 E. Horsetooth Road, Building 2-202
Fort Collins, CO 80525-3196
970.229.9668 office
970.226.3855 fax
www.aquaengineering.com

REGISTERED PROFESSIONAL ENGINEER
REG. NO. 5929
ROBERT W. BECCARD
SOUTH DAKOTA
01/18/2013

ARCHITECT/ENGINEERS:

KHA
Kenneth Hahn Architects

Drawing Title: IRRIGATION DETAILS	Project Title: RENOVATION IRRIGATION SYSTEM		VA Project Number: 568-13-201
Approved Project Director	Location: HOT SPRINGS, SD		Drawing Number: I-1.10
	Date: JANUARY 18, 2013	Checked: RWB	Drawn: JDL/CAM
			Sheet # 11 of 12

VA BLACK HILLS HEALTH CARE SYSTEM

Department of Veterans Affairs

VA FORM 08-6231

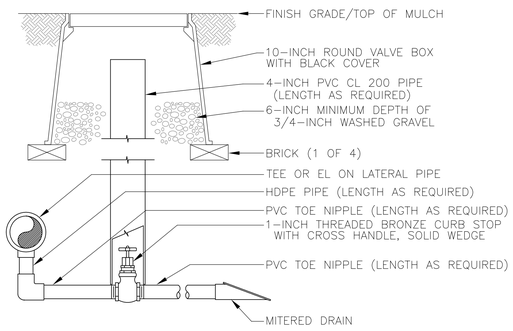

NOTES:
1. SLEEVE TO BE SET SQUARE OVER GATE VALVE TO ALLOW FOR OPERATION OF VALVE WITHOUT BINDING.
2. FURNISH APPROPRIATE HANDLE AND KEY TO MATCH GATE VALVE.

1 MANUAL DRAIN DETAIL

N.T.S.

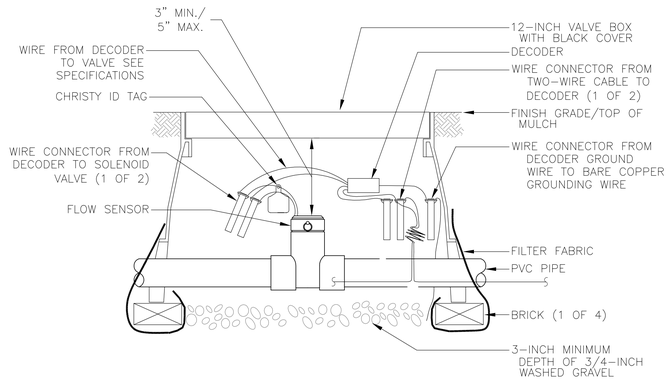

NOTES:
1. ALLOW 10 PIPE DIAMETERS UPSTREAM AND 5 PIPE DIAMETERS DOWNSTREAM OF STRAIGHT RUN OF PIPE TO ACHIEVE PROPER FLOW REGIME.
2. INSTALL FILTER FABRIC AROUND EXTERIOR OF VALVE BOX. USE DUCT TAPE TO SECURE FABRIC TO PIPE AND VALVE BOX.
3. DO NOT CUT OUT ENDS OF VALVE BOX UNNECESSARILY.
4. INSTALL SO THAT GRAVEL IS ONLY IN CONTACT WITH BOTTOM OF SENSOR ASSEMBLY.

2 1-INCH FLOW SENSOR ASSEMBLY

N.T.S.

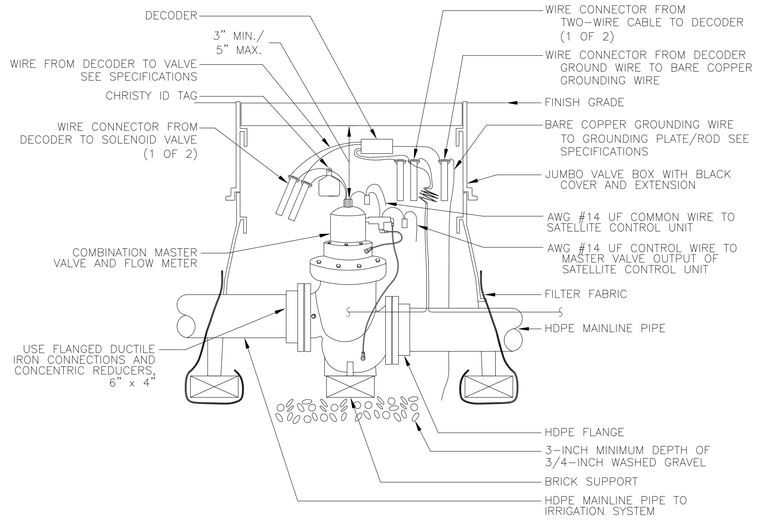

NOTES:
1. COIL 24-INCH LENGTH OF EACH WIRE IN AN 8-INCH DIAMETER LOOP WITHIN THE VALVE BOX.
2. USE 2-INCH FIPT UNIONS IN LIEU OF SCH. 40 FLANGES IN CASE OF 2-INCH BERMAD VALVE.
3. BRAND VALVE BOX COVER PER SPECIFICATIONS.

3 MASTER VALVE/FLOW SENSOR ASSEMBLY

N.T.S.

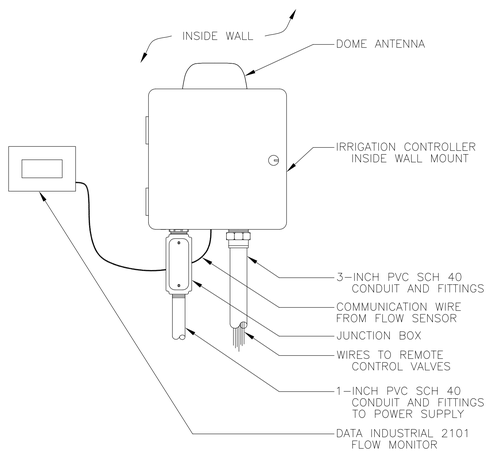

NOTE:
1. ANTENNA CAN BE SHARED BETWEEN CONTROLLERS.

4 CONTROLLER DETAIL

N.T.S.

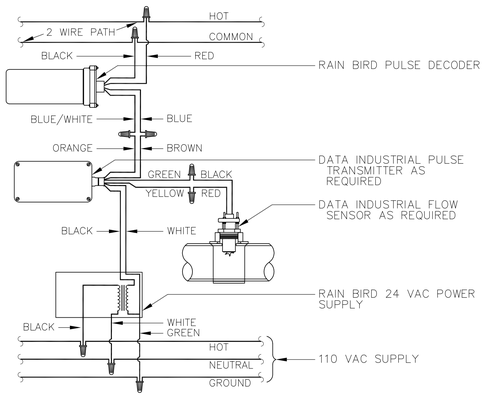

NOTES:
1. DATA INDUSTRIAL FLOW SENSOR TO BE LOCATED NO MORE THAN 2000 FEET FROM DATA INDUSTRIAL MODEL 2100.
2. INSTALL FLOW METER PER DATA INDUSTRIAL'S SPECIFICATIONS.

5 FLOW SENSOR DECODER SCHEMATIC

N.T.S.

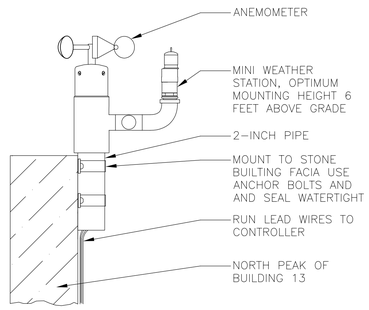

NOTE:
1. FOR MOST ACCURATE TEMPERATURE SENSING, ROTATE THE MINI WEATHER STATION SO THAT THE THERMOSTAT PORTION POINTS SOUTH. THE MWS IS DESIGNED TO MOUNT ON A POST OF 2-INCH PIPE, ANY COMBINATION OF PIPE AND FITTINGS MAY BE USED. ROUTE APPROX. 50' CONDUIT IN WITH COMMUNICATION WIRE INTO BUILDING THROUGH SAME BUILDING PENETRATION AS THE WTO WIRE CONTROL PATH.

6 MINI WEATHER STATION DETAIL

N.T.S.

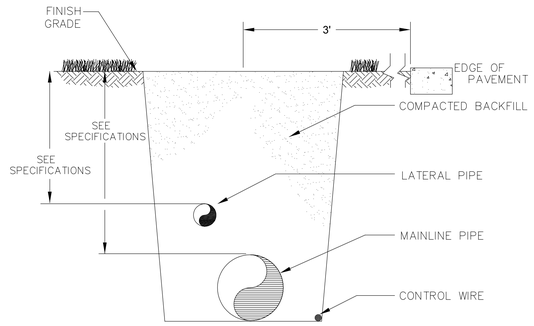

NOTE:
1. CONTROL WIRE ROUTED UNDER HARDSCAPE AND ROADS TO BE INSTALLED IN CONDUIT.

7 TRENCH DETAIL

N.T.S.

BID DOCUMENTS

Revisions:	Date:

CONSULTANTS:

Aqua Engineering Inc.
Innovative Water Solutions
375 E. Horsetooth Road, Building 2-202
Fort Collins, CO 80525-3196
970.229.9668 office
970.226.3855 fax
www.aquaengineering.com

REGISTERED PROFESSIONAL ENGINEER REG. NO. 5929 ROBERT W. BECCARD SOUTH DAKOTA
01/18/2013

ARCHITECT/ENGINEERS:
Kenneth Hahn Architects

Drawing Title: IRRIGATION DETAILS	Project Title: RENOVATION IRRIGATION SYSTEM		VA Project Number: 568-13-201
Approved Project Director	Location: HOT SPRINGS, SD		Drawing Number: I-1.11
	Date: JANUARY 18, 2013	Checked: RWB	Drawn: JDL/CAM
			Sheet # 12 of 12

VA BLACK HILLS HEALTH CARE SYSTEM

Department of Veterans Affairs

VA FORM 08-6231