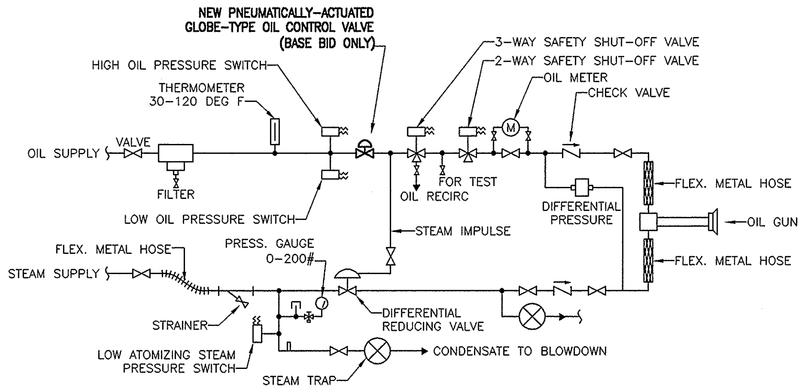

B1 EXISTING OIL VALVE TRAIN MODIFICATIONS (BOILERS 2 & 3)

NOT TO SCALE

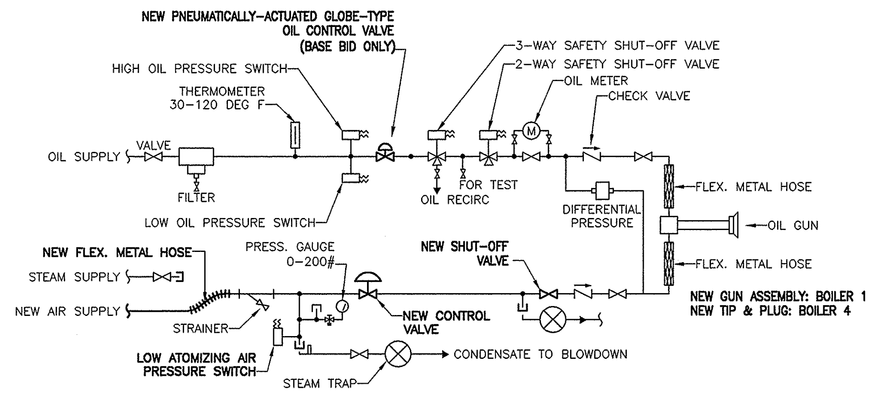

D1 EXISTING OIL VALVE TRAIN MODIFICATIONS (BOILERS 1 & 4)

NOT TO SCALE

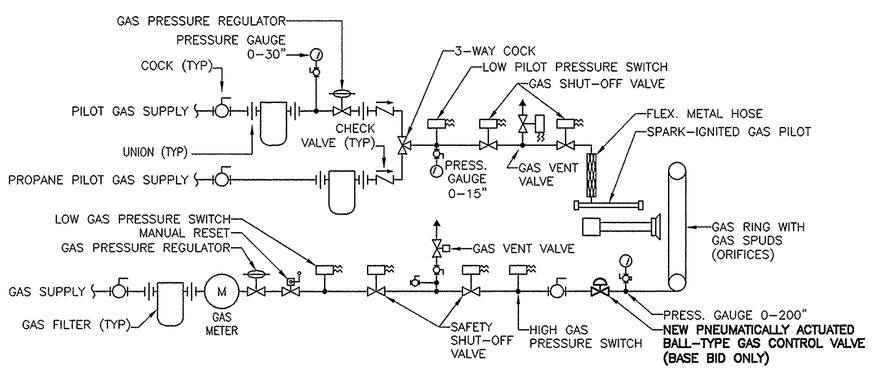

F1 EXISTING GAS VALVE TRAIN MODIFICATIONS (TYPICAL OF 4)

NOT TO SCALE

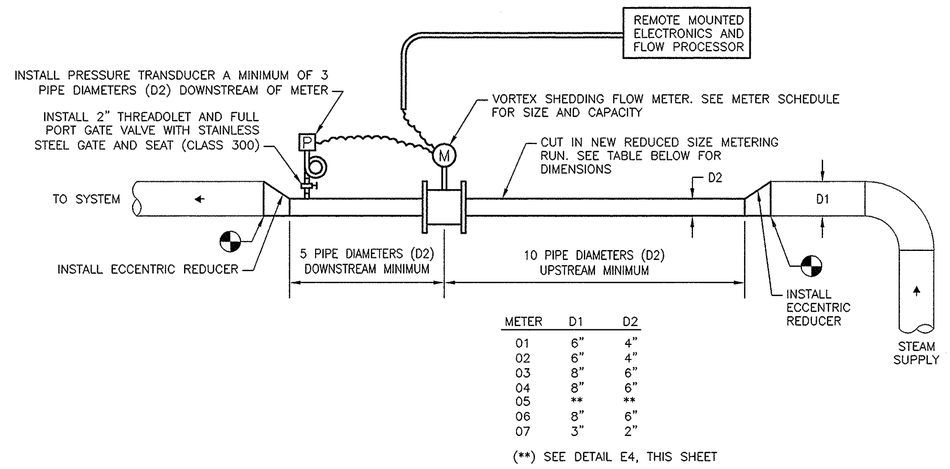

METER	D1	D2
01	6"	4"
02	6"	4"
03	8"	6"
04	8"	6"
05	**	**
06	8"	6"
07	3"	2"

(**) SEE DETAIL E4, THIS SHEET

B4 INLINE VORTEX SHEDDING STEAM METER DETAIL

NOT TO SCALE

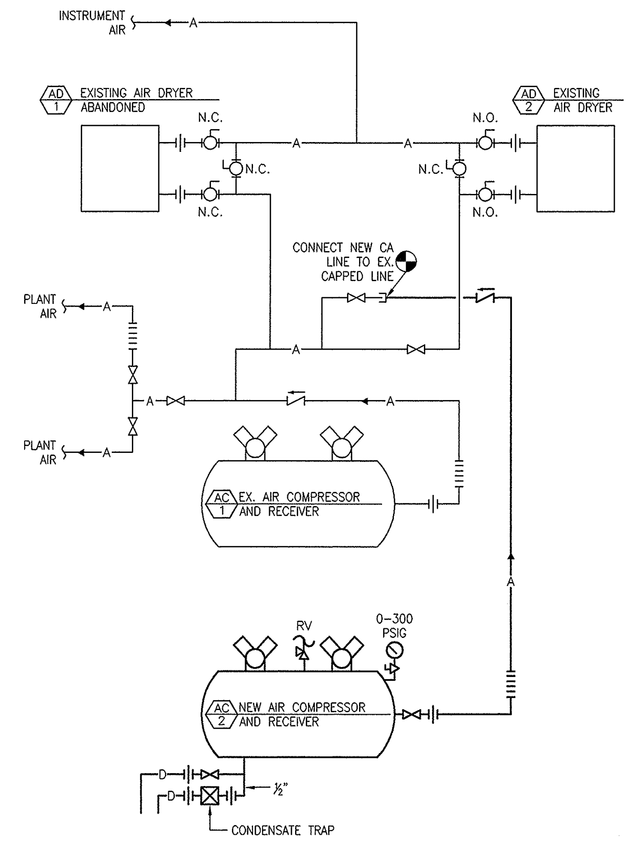

C7 PLANT COMPRESSED AIR SYSTEM

NOT TO SCALE

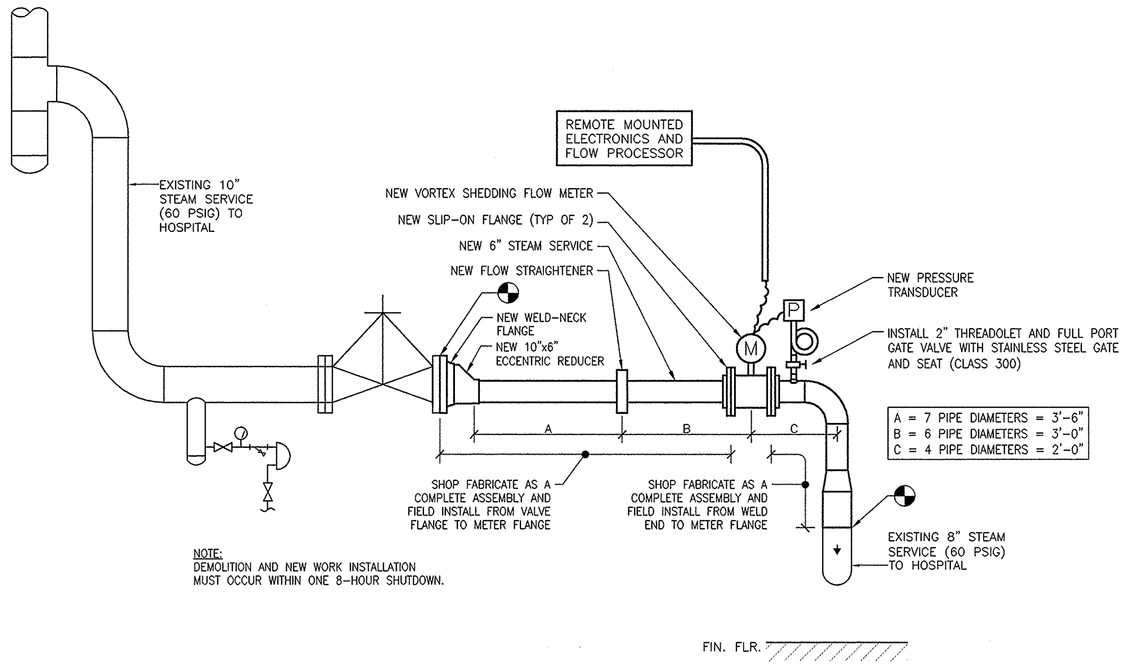

NOTE:
DEMOLITION AND NEW WORK INSTALLATION MUST OCCUR WITHIN ONE 8-HOUR SHUTDOWN.

E4 INLINE VORTEX STEAM METER NO. 05 (HOSPITAL)

1/2" = 1'-0"

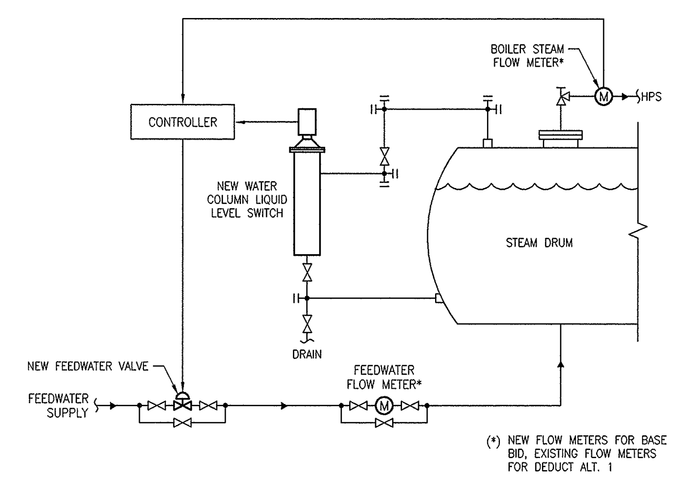

(*) NEW FLOW METERS FOR BASE BID, EXISTING FLOW METERS FOR DEDUCT ALT. 1

F8 TWO-ELEMENT FEEDWATER CONTROL

NOT TO SCALE

Revisions:	Date

CONSULTANTS:

TA Engineering, Inc.
Technical Analysis and Engineering
CATONSVILLE PROFESSIONAL CENTER
405 FREDERICK ROAD, SUITE 252
BALTIMORE, MARYLAND 21228
(410) 747 - 9606 (PHONE)
(410) 747 - 9609 (FAX)

bkm Engineering Life Spaces
Burdette, Koehler, Murphy & Associates, Inc.
Mechanical / Electrical Consulting Engineers
1423 Clarkview Road, Suite 500, Baltimore, Maryland 21209
P 410.323.0600, F 410.377.2543, www.bkma.com

COMMONWEALTH OF PENNSYLVANIA — REGISTERED PROFESSIONAL — ALAN SCOTT ZEMBA — PE054498

ARCHITECT/ENGINEERS:

Drawing Title	MECHANICAL DETAILS, p. 1 of 2
Approved: Project Director	
Project Title	UPGRADE BOILER PLANT INSTRUMENTATION B/14
Location	COATESVILLE, PA
Date	7 MAY 2009
Checked	ASZ
Drawn	CHT
Project Number	542-06-109
Building Number	014
Drawing Number	14-M510
	Dwg. 8 of 16

Office of Facilities Management
Department of Veterans Affairs

VA FORM 08-6231, OCT 1978

S:\07112 New Boiler Controls VA Coatesville\AutoCAD\Current\Mech Details Base C05.dwg, 5/6/2009 9:30:42 AM