CONSTRUCTION DOCUMENTS

SHEET NOTES

1. MULTI-WIRE BRANCH CIRCUITS ARE NOT ALLOWED. EACH UNGROUNDED SINGLE POLE CIRCUIT SHALL HAVE A SEPARATE NEUTRAL CONDUCTOR.

NUMBERED NOTES

1. PANEL 'B1' (2-SECTION).
2. (2) 1 1/2" CONDUITS TO NETWORK EQUIPMENT CABINET.
3. REFRIGERATOR, 120V.
4. WATER COOLER, 120V.
5. MICROWAVE, 120V.
6. GARBAGE DISPOSAL, 120V.
7. MOTORIZED DOOR, 120V - PROVIDE CONDUIT & WIRING FOR CONTROLS & LIMIT SWITCH.
8. WELDER (VERIFY REQ'D NEMA OUTLET CONFIGURATION AND POWER REQUIREMENTS WITH OWNER).
9. FIRE ALARM CONTROL PANEL.
10. INTRUSION ALARM PANEL.
11. 1" CONDUIT FOR LOW VOLTAGE CONTROL WIRES. CONNECT TO HP-4.
12. SWITCH WITH LIGHTS. SEE EF CONTROL DIAGRAM ON 2/E9.
13. REMOTE NETWORK EQUIPMENT CABINET. SEE 4/E-7 FOR DETAIL.
14. PROVIDE 1 1/2" CONDUIT TO ROOF FOR FUTURE SOLAR PANEL.
15. NOT USED.
16. TELECOMMUNICATIONS ENTRY BACKBOARD. 4'x8' PLYWOOD BACKBOARD. SPLICE POINT LOCATION FOR 25-PAIR AND 2-STRAND FIBER TRANSITION. GROUND ARMORED CABLE AT TELECOMMUNICATIONS GROUNDING BUS BAR.
17. TELECOMMUNICATIONS GROUNDING BUS BAR. MOUNT ABOVE SPLICE LOCATION.
18. RECEPTACLE LOCATED INSIDE CABINET. SEE 4/E-7 FOR DETAIL.

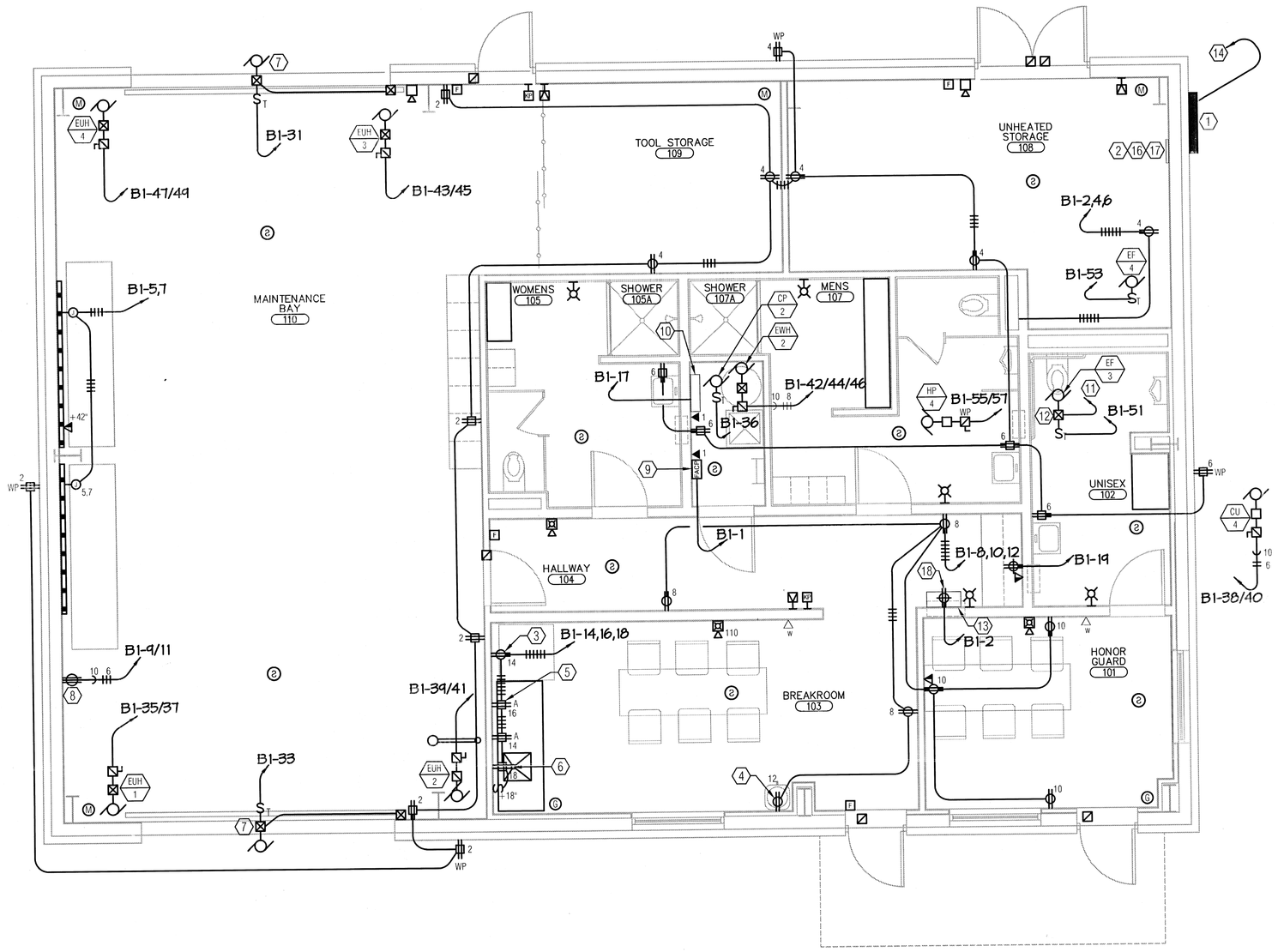

1 **MAINTENANCE BUILDING FLOOR PLAN - POWER & SIGNAL**

SCALE: 1/4"=1'-0"

NORTH

CONSTRUCTION DOCUMENTS

Revisions	Date

REGISTERED PROFESSIONAL ENGINEER YIU SHING DONG LEE No. E 017376 Exp. 9-30-14 ELECTRICAL STATE OF CALIFORNIA

ECOM ENGINEERING INC.
1796 TRIBUTE ROAD, SUITE 100
SACRAMENTO, CA. 95815
916.641.5600
916.641.1640 FAX
WWW.ECOMENG.COM

JOB NO. 10E286.00 PM MARK
DESIGNER MARK

JACOBS
Consultants in Architecture, Engineering, Planning, and the Environment
Sacramento Office
180 Promenade Circle, Suite 300
Sacramento, California 95834
(916) 929-3323 Fax (916) 929-1772

Subconsultant List

DREYFUSS & BLACKFORD	3540 FOLSOM BOULEVARD, SACRAMENTO, CA 95816 (916) 453-1234
CAPITAL ENGINEERING CONSULTANTS	11020 SUN CENTER DRIVE, RANCHO CORDOVA, CA 95670 (916) 851-3500
ECOM ENGINEERING INC.	1796 TRIBUTE ROAD, SUITE 100 SACRAMENTO, CA (916) 641-5600
BUEHLER & BUEHLER STRUCTURAL ENGINEERS, INC.	600 Q STREET, STE. 200, SACRAMENTO, CA. 95811 (916) 443-0303
W.L. BURLE ENGINEERS, PA	111 S. WALNUT STREET, GREENVILLE, MS 38702 (662) 332-2619
AQUA ENGINEERING, INC.	4803 INNOVATION DRIVE, FORT COLLINS, CO 80525 (970) 229-9668
THE SIERRA WEST GROUP, LLC	2730 GATEWAY OAKS DRIVE, STE. 110 SACRAMENTO, CA. 95833 (916) 925-4000

NATIONAL CEMETERY ADMINISTRATION

Drawing Title: MAINTENANCE BUILDING FLOOR PLAN – POWER & SIGNAL

Project Title: LOUISIANA NATIONAL CEMETERY GRAVESITE EXPANSION PHASE 1B

Date: OCTOBER 24, 2012

Project No. 870CM3023B

Approved: Director, Office of Construction Management

Approved: Director, Project Management Service

Building Number | Checked | Drawn

Location: LOUISIANA NATIONAL CEMETERY ZACHARY, LOUISIANA

DRAWING NO. 3000-E2

Dwg. 150 of 150

CONSTRUCTION DOCUMENTS

SHEET NOTES

1. REFER TO SHEET E-3 FOR MOTION SWITCHING SYSTEM WIRING DIAGRAM.
2. PROVIDE UNSWITCHED 'HOT' TO EXIT SIGNS AND EMERGENCY LIGHTS.
3. MULTI-WIRE BRANCH CIRCUITS ARE NOT ALLOWED. EACH UNGROUNDED SINGLE POLE CIRCUIT SHALL HAVE A SEPARATE NEUTRAL CONDUCTOR.

NUMBERED NOTES

1. SERVICE PANEL 'B1'.
2. VIA LIGHTING CONTROL PANEL.
3. LCP WATTSTOPPER LP8 PEANUT LIGHTING CONTROL. PANEL, MODEL #LP8F-8-115. SEE 1/E-3.

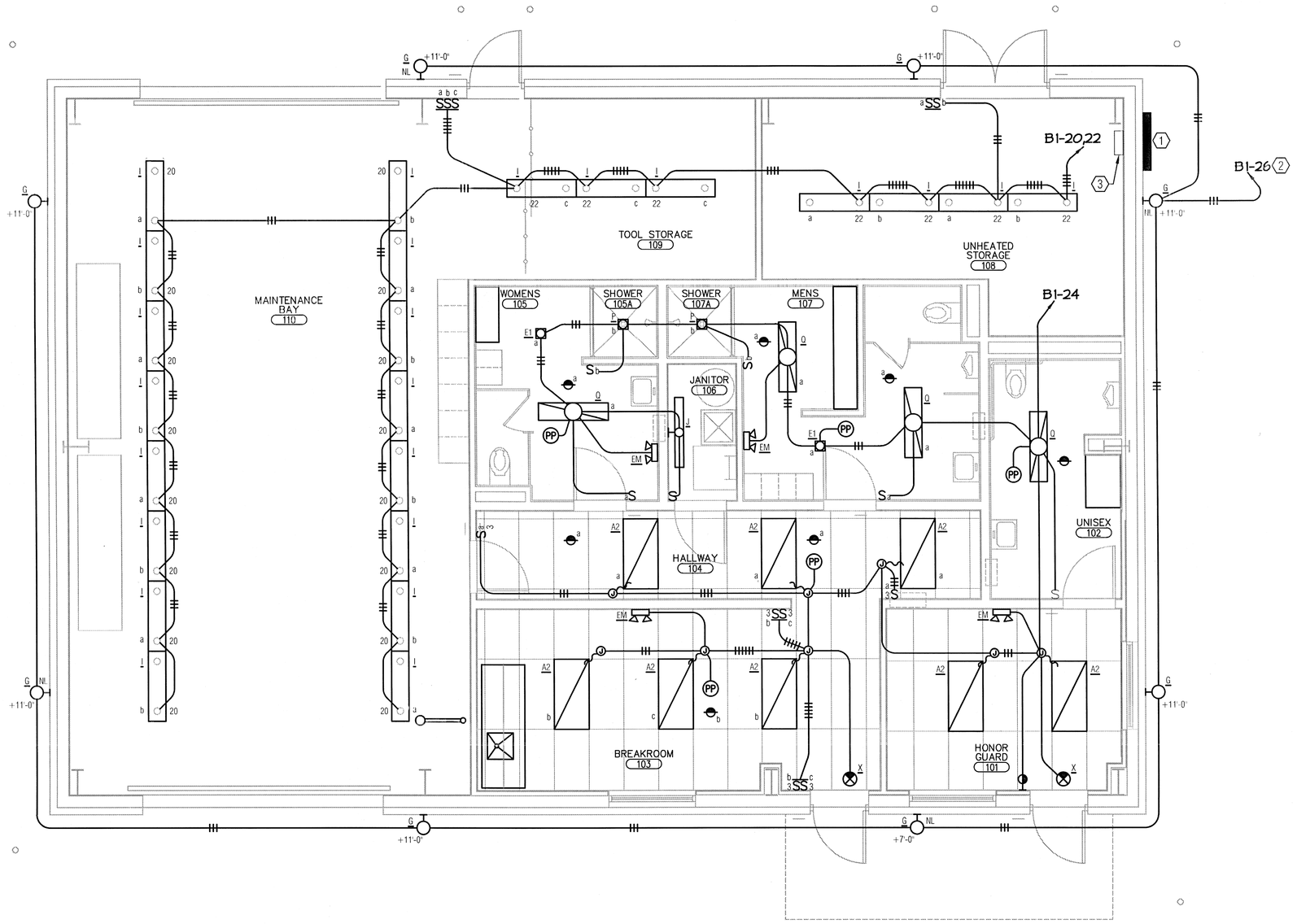

1 MAINTENANCE BUILDING FLOOR PLAN - LIGHTING

SCALE: 1/4"=1'-0"

NORTH

CONSTRUCTION DOCUMENTS

Revisions	Date

REGISTERED PROFESSIONAL ENGINEER
YIP SHING DONNY LEE
No. E 017376
Exp. 9-30-14
ELECTRICAL
STATE OF CALIFORNIA

ECOM ENGINEERING INC.
1796 TRIBUTE ROAD, SUITE 100
SACRAMENTO, CA. 95815
916.641.5600
916.641.1640 FAX
WWW.ECOMENG.COM
JOB NO. 10E286.00 PM. MARK
DESIGNERS MARK

JACOBS
Consultants in Architecture, Engineering, Planning, and the Environment
Sacramento Office
180 Promenade Circle, Suite 300
Sacramento, California 95834
(916) 929-3323 Fax (916) 929-1772

Subconsultant List	
DREYFUSS & BLACKFORD	3540 FOLSOM BOULEVARD, SACRAMENTO, CA 95816 (916) 453-1234
CAPITAL ENGINEERING CONSULTANTS	11020 SUN CENTER DRIVE, RANCHO CORDOVA, CA 95670 (916) 851-3500
ECOM ENGINEERING INC.	1796 TRIBUTE ROAD, SUITE 100 SACRAMENTO, CA (916) 641-5600
BUEHLER & BUEHLER STRUCTURAL ENGINEERS, INC.	600 Q STREET, STE. 200, SACRAMENTO, CA. 95811 (916) 443-0303
W.L. BURLE ENGINEERS, PA	111 S. WALNUT STREET, GREENVILLE, MS 38702 (662) 332-2619
AQUA ENGINEERING, INC.	4803 INNOVATION DRIVE, FORT COLLINS, CO 80525 (970) 229-9668
THE SIERRA WEST GROUP, LLC	2730 GATEWAY OAKS DRIVE, STE. 110 SACRAMENTO, CA. 95833 (916) 925-4000

NATIONAL CEMETERY ADMINISTRATION

Drawing Title: MAINTENANCE BUILDING FLOOR PLAN – LIGHTING	Project Title: LOUISIANA NATIONAL CEMETERY GRAVESITE EXPANSION PHASE 1B		Date: OCTOBER 24, 2012
Approved: Director, Office of Construction Management	Building Number	Checked	Drawn
Approved: Director, Project Management Service	Location: LOUISIANA NATIONAL CEMETERY ZACHARY, LOUISIANA		Project No. 870CM3023B
			DRAWING NO. 3000-E1
			Dwg. 149 of 150

SOLAR POWER SYSTEMS SPECIFICATIONS

PART 1 - GENERAL

1.01 SCOPE

A. EACH SOLAR ELECTRIC POWER SYSTEM SHALL CONSIST OF A ROOF MOUNTED POWER ASSEMBLY AND ALL REQUIRED WIRING AS MANUFACTURED BY SOLAR ELECTRIC POWER COMPANY (SEPCO) OR EQUAL.

B. EACH SOLAR ELECTRIC POWER ASSEMBLY SHALL HAVE A SEPCO 170 WATT POWER ASSEMBLY AND SHALL CONSIST OF THREE PARTS:

1. PANEL ASSEMBLY: A 170 WATT SINGLE ARRAY CONSISTING OF TWO SINGLE CRYSTAL 85 WATT MODULES WHICH ARE MECHANICALLY BOUND TOGETHER. SOLAR ARRAY PRODUCES 9.8 AMPS CHARGE CURRENT AND MEASURES 42"W X 48"L X 2.1"D. THE ARRAY HAS A 10 YEAR WARRANTY FOR 10% POWER LOSS AND 25 YEAR WARRANTY FOR 25% POWER LOSS. SOLAR ARRAY HAS A LIFE CYCLE TESTING AND ACTUAL FIELD PROVEN LIFE FOR OVER 30 YEARS. COMPLETE WITH ALL STAINLESS STEEL MOUNTING HARDWARE. ALL METAL CRAFTING SHALL BE PERFORMED BY HIGH SPEED ROBOTIC PRESSES USING COMPUTER PROGRAMMED INSTRUCTIONS.

2. BATTERY ASSEMBLY: A VENTED ALUMINUM BOX CONTAINING 2-112 AMP HOUR SEALED GEL BATTERY(S) (TOTAL 224 AH) WHICH IS INTEGRALLY MOUNTED AND PRE-WIRED TO INCLUDE A STANDARD WIRE HARNESS WITH SIMPLE PLUG IN CONNECTIONS FOR THE SEPCO LCU-1 LIGHTING COMPUTER/CONTROL UNIT AND THE SOLAR POWER ASSEMBLY. THE LOW PROFILE DESIGN CONTAINS A PREFORMED AND WELDED BACK MOUNTING PLATE FOR EASY SLIDE ON ATTACHMENT TO THE POWER BRACKET. BATTERY ASSEMBLY CONTAINS SEPCO UNIQUE "THROUGH THE POLE" REAR WIRE ROUTING OUTPUT FOR NO EXPOSED WIRING TO PROVIDE A NEAT CLEAN APPEARANCE FOR THE FINISHED INSTALLATION. THE BATTERY IS FULLY WARRANTED FOR 5 YEARS AND DESIGNED FOR 5 TO 7 YEARS OF OPERATION. THE LCU1 LIGHTING COMPUTER UNIT IS FULLY WARRANTED FOR 5 YEARS. BATTERY ASSEMBLY IS COMPLETE WITH ALL STAINLESS STEEL MOUNTING HARDWARE. ALL METAL CRAFTING HAS BEEN PERFORMED BY HIGH SPEED ROBOTIC PRESSES USING COMPUTER PROGRAMMED INSTRUCTIONS.

3. POWER BRACKET: AN ALL ALUMINUM DOUBLE SUPPORT 5/15/45 DEGREE POWER BRACKET CONSISTS OF A SUBSTANTIAL ALUMINUM CHANNEL AFFORDING MOUNTING TO ANY ROOFTOP. CIRCUMFERENCE WELDING OF STRONG SCHEDULE 40-2.5" ALUMINUM PIPE IN DOUBLE SUPPORT ARRANGEMENT TO PROVIDE MAXIMUM STRENGTH FOR WIND LOADING IN EXCESS OF 150 MPH. THE POWER BRACKET CONTAINS PREDRILLED AND TAPPED BATTERY SLIDE MOUNT BOLTS OF STAINLESS STEEL AND TWO 11/16" MOUNTING HOLES FOR UTILITY STANDARD 5/8" MOUNTING BOLTS. THE BRACKET CONTAINS THE UNIQUE "THROUGH THE POLE" BATTERY WIRE HOLE FOR NO EXPOSED SYSTEM WIRING.

PART 2 - PRODUCTS

2.01 SOLAR PANEL ASSEMBLY

A. THE SOLAR PANEL(S) SHALL BE OF SINGLE CRYSTAL TECHNOLOGY, WITH A FULL SOLAR PANEL REPLACEMENT WARRANTY OF 10 YEARS AGAINST THE POWER OUTPUT OF THE SOLAR PANEL DEGRADING OVER 10% PLUS A 25 YEAR WARRANTY AGAINST THE SOLAR PANEL DEGRADING BY OVER 20%. THE PANEL(S) SHALL HAVE PASSED COMPLETE ENVIRONMENTAL REQUIREMENTS OF THE JET PROPULSION LABORATORY, JPL SPECIFICATION NO. 5101-61 (BLOCK V). THE PANEL(S) SHALL HAVE PASSED SALT/FOG TESTS TO MIL-STANDARD 810. FURTHER, THE PANEL(S) SHALL HAVE BEEN PERFORMANCE TESTED ACCORDING TO THE METHODS SPECIFIED IN IEC 904 AND ASTM E 1036. THE SOLAR PANEL(S) SHALL BE CERTIFIED THAT THE ESTABLISHMENT HAS ISSUED A MODULE QUALIFICATION CERTIFICATE, REGISTRATION NO. PV-MT-503-66/94, ACCORDING TO THE REQUIREMENTS LAID DOWN IN CEC SPECIFICATION NO. 503. IT SHALL BE FURTHER CERTIFIED THAT THE PANEL(S) HAVE BEEN APPROVED BY THE FACTORY MUTUAL RESEARCH UNDER APPROVAL AGREEMENT REFERENCE NO. 1Z2A6.AX.

B. THE SOLAR POWER ARRAY SHALL BE SIZED SUCH THAT THE SYSTEM WILL PROVIDE POWER THE FOLLOWING:
ALL PANEL(S) WITHIN THE ARRAY SHALL BE

1. ONE (1) 15 WATT 12VDC LED FIXTURE - OPERATING 2 CUMULATIVE HOURS PER DAY VIA OCCUPANCY SENSOR.
2. TWO (2) 4 WATT 12VDC FANS - OPERATING 5 CUMULATIVE HOURS PER DAY VIA SPRING LOADED TIMER.
3. ONE (1) 60 WATT 12VDC AMPLIFIER - OPERATING 5 CUMULATIVE HOURS PER DAY VIA SPRING LOADED TIMER.

C. THE SOLAR PANEL ASSEMBLY POWER WIRES SHALL BE OF 10 GAUGE THIN STRANDED WIRE. THE WIRES SHALL EXIT THE REAR OF THE PANEL ASSEMBLY THROUGH FLEXIBLE CONDUIT AND TERMINATE IN A WEATHER PROOF ELECTRICAL CONNECTOR USED TO DISCONNECT THE SOLAR POWER ASSEMBLY AND ALLOW FOR QUICK, EASY INSTALLATION AND FAST COMPONENT CHANGE OUT. THIS ELECTRICAL CONNECTOR SHALL CONSIST OF COPPER BLADED TERMINALS THAT ARE CRIMPED AND SOLDERED TO THE WIRES. THESE COPPER BLADED TERMINALS SHALL USE POSITIVE CONTACT SPRING PRESSURE AND A MINIMUM OF 75% SURFACE CONTACT AREA WITH THE MATING TERMINAL. THE CONNECTOR SHALL HAVE A CAPTIVE DEVICE TO MECHANICALLY LOCK THE CONNECTOR THE PLUG.

2.02 BATTERY ASSEMBLY

A. THE STORAGE BATTERY(S) SHALL BE OF A SEALED VALVE REGULATED THIXOTROPIC GEL LEAD ACID TYPE. IT SHALL BE PRESSURIZED THROUGH THE USE OF BUNSEN TYPE VENTS, MAINTENANCE FREE, AIR SHIPPABLE, 100% RECYCLABLE.

B. THE BATTERY SHALL BE MOUNTING A VENTED ALUMINUM BOX CONSTRUCTED OF .090 ALUMINUM SHEET AND OF A HIGH QUALITY MARINE GRADE TO A MINIMUM TEMPER OF 5052-H32. THE BATTERY BOX SHALL BE VENTED IN A LEAST EIGHT LOCATIONS USING A MINIMUM 3" MACHINE PUNCH VENT PLACED IN SUCH A FASHION AS TO ALLOW COOLING AIR TO CIRCULATE THROUGH THE BATTERY AND TO MINIMIZE RAIN WATER INTRUSION. THE STORAGE BATTERY IN THE ALUMINUM BOX CAN BE MOUNTED IN THE SHADE BEHIND THE SOLAR PANEL ASSEMBLY AND SEPARATED FROM THE PANEL ASSEMBLY SO THAT THE BATTERY WILL NOT BE IN THERMAL COMMUNICATION WITH THE SOLAR PANELS. THE STORAGE BATTERY IN THE ALUMINUM BOX CAN ALSO BE MOUNTED IN AN AREA INDEPENDENT OF SOLAR ARRAY. THE BATTERY BOX SHALL BE A LOW PROFILE DESIGN AND CONTAIN A PREFORMED AND WELDED BACK MOUNTING PLATE FOR EASY SLIDE ON ATTACHMENT. THE BATTERY ASSEMBLY SHALL CONTAIN A "THROUGH THE POLE" REAR WIRE ROUTING OUTPUT FOR NO EXPOSED WIRING TO PROVIDE A NEAT CLEAN APPEARANCE FOR THE FINISHED INSTALLATION. ALL METAL CRAFTING SHALL BE PERFORMED BY HIGH SPEED ROBOTIC PRESSES USING COMPUTER PROGRAMMED INSTRUCTIONS.

C. THE BATTERY SHALL BE FIELD REPLACEABLE WITHIN THE ALUMINUM BOX THROUGH THE USE OF AN INTERNAL WIRING HARNESS WHICH SHALL BE OF 12 GAUGE THIN WIRE. THE HARNESS SHALL TERMINATE IN A WEATHER PROOF ELECTRICAL CONNECTOR USED TO DISCONNECT THE SOLAR POWER ASSEMBLY FROM THE CONTROLLER AND THE CONTROLLER FROM THE BATTERY. THIS WILL ALLOW FOR QUICK, EASY INSTALLATION WITH NO HARD WIRING OR INCORRECTLY PLACED WIRES, AND ALSO ALLOW FOR FAST COMPONENT CHANGE OUT AND TROUBLE SHOOTING. THE HARNESS SHALL BE EQUIPPED WITH A FUSE LOCATED IN A WATERPROOF FUSE HOLDER WITH A POSITIVE SEALING COVER. THE BATTERY ASSEMBLY SHALL CONTAIN A SPARE FUSE THE ELECTRICAL CONNECTORS ON THE HARNESS SHALL CONSIST OF COPPER BLADED TERMINALS THAT ARE CRIMPED AND SOLDERED TO THE WIRES. THESE COPPER BLADED TERMINALS SHALL USE POSITIVE CONTACT SPRING PRESSURE AND A MINIMUM OF 75% SURFACE CONTACT AREA WITH THE MATING TERMINAL. THE CONNECTOR SHALL HAVE A CAPTIVE DEVICE TO MECHANICALLY LOCK CONNECTOR TO MATING PLUG.

D. THE BATTERY SHALL BE FULLY WARRANTED FOR A MINIMUM OF 2 YEARS AND PRORATED FOR THE FOLLOWING 3 AND DESIGNATED FOR 5 TO 7 YEARS OF OPERATION.

2.03 CONTROL ELECTRONICS

A. THE ENTIRE CHARGE AND DUSK TILL DAWN LOAD CONTROL ELECTRONICS SHALL BE HOUSED IN AN ABS CASE WHICH IS TOTALLY ENCAPSULATED WITH A UL. APPROVED POLYMER EPOXY FOR PROTECTION FROM WEATHER, WHICH SHALL RENDER THE CONTROL ELECTRONICS AS WATERPROOF TO THE POINT WHEREBY IT ACTUALLY CAN BE USED UNDERWATER. NO EXPOSED CIRCUIT BOARDS, EVEN WITH CONJUGAL COATING WILL BE ALLOWED. EACH OF FOUR INPUT LEADS SHALL BE LIGHTNING PROTECTED AND THE CONTROLLER SHALL BE EQUIPPED WITH A FOUR PRONG BLADE TYPE PLUG WITH CAPTIVE MECHANICAL LOCKING MECHANISM TO PROVIDE FOR QUICK DISCONNECT TO FACILITATE INSTALLATION AND SERVICE.

B. THE CHARGE CURRENT FROM THE SOLAR PANEL SHALL BE CONTROLLED IN A 3-STAGE, PULSE WIDTH MODULATION (PWM) FASHION TO CHARGE THE GEL BATTERY TO A FLOAT OF 14.1 VDC. THE SERIES CHARGE SHALL NOT BE ALLOWED TO RESUME UNLESS THE BATTERY VOLTAGE FALLS BELOW 13.4 VDC. THE CHARGE SHALL NOT CONNECT UNLESS THE SOLAR PANEL CAN ACTUALLY CHARGE THE BATTERY WITH A CURRENT OF AT LEAST 200MA. THE CHARGE CONDITION SHALL BE INDICATED BY A GREEN MICRO L.E.D. AND THERE SHALL ALSO BE AN L.E.D. OF RED TO INDICATE A MORE THAN 3 MA OF POWER FROM THE BATTERY DURING THE CHARGE PROCESS AND THE CONTROLLER SHALL NOT REPRESENT MORE THAN .003 OHMS OF RESISTANCE IN THE CHARGE PATH.

C. THE CONTROLLER SHALL BE EQUIPPED WITH AN INTERNAL CIRCUIT WHICH CAN BE REMOTELY ACTUATED BY AN INVISIBLE FORCE THAT CAN BE ACTUATED FROM GROUND LEVEL TO TEST THE SYSTEM AT ANY TIME, DAY OR NIGHT WITHOUT ACCESSING THE SYSTEM. THIS TEST CIRCUIT SHALL NOT INCLUDE ANY THROUGH THE CASE SWITCH WHICH CAN BECOME CORRODED AND/OR INOPERATIVE RENDERING THE CONTROL ELECTRONICS USELESS. THIS CIRCUIT SHALL CAUSE THE CONTROLLER TO PERFORM A SELF TEST, AND TEST EVERY FUNCTION AND COMPONENT OF THE SYSTEM AND DISPLAY THROUGH THE LED READOUTS WHICH COMPONENT SECTION OF THE SYSTEM HAS FAILED.

D. THE CONTROL SHALL BE ENTIRELY SOLID STATE AND CONSTRUCTED WITH NO RELAYS, BLOCKING DIODES, OR WIRE CRIMP/SCREW TERMINAL CONNECTORS. THE ENTIRE CONTROL SHALL BE SEALED AS INDICATIVE OF ITS ABILITY TO OPERATE COMPLETELY SUBMERGED IN SALT WATER. THE ENTIRE CHARGE ELECTRONICS SHALL BE FULLY WARRANTED FOR 5 YEARS AND LIFE CYCLE TESTED OVER 15 YEARS OF OPERATION.

2.04 POWER BRACKET

A. THE SOLAR POWER ASSEMBLY AND BATTERY ASSEMBLY WITH LIGHTING CONTROLLER SHALL BE MOUNTED UPON AN ALUMINUM POWER BRACKET CONSTRUCTED OF T6063 TEMPERED EXTRUSIONS. THE BRACKET SHALL CONSIST OF A SUBSTANTIAL VERTICAL ALUMINUM CHANNEL WITH LIKE CHANNELS HORIZONTALLY ORIENTED AT THE DISTAL ENDS OF THE SUBSTANTIAL CHANNEL. THE DOUBLE SUPPORT BRACKET SHALL BE CAPABLE OF ATTACHMENT TO ANY POLE OR WALL WITH A SECTION OF 4" OR GREATER. THE HORIZONTAL SUBSTANTIAL CHANNEL MEMBERS SHALL HAVE TWO TRIANGULAR DISPOSED ALUMINUM PIPE SECTIONS. THESE SECTIONS SHALL BE CIRCUMFERENCE WELDED IN SIX PLACES AND FORMED IN SUCH A MANNER THAT THE POWER BRACKET CAN BE INSTALLED TO ALLOW THE SOLAR PANEL ASSEMBLY TO BE A FIXED MOUNT OF 15 OR 45 DEGREES OF TILT. THE POWER BRACKET SHALL BE OF SUFFICIENT STRENGTH TO HOLD THE SOLAR PANEL AND BATTERY UP TO WITHSTAND 150 MPH WINDS. ALL ASSOCIATED HARDWARE SHALL BE OF STAINLESS STEEL.

PART 3 - EXECUTION

3.01 SUPPORT MATERIALS

A. THE SYSTEM SHALL BE SUPPLIED WITH COLOR LITERATURE SHOWING ACTUAL INSTALLATIONS AND OPTIONAL MOUNTING COMBINATIONS TO AID IN INSTALLATIONS. THE SYSTEM SHALL BE SUPPLIED WITH A TECHNICAL MANUAL DESCRIBING SYSTEM FEATURES AND SPECIFICATIONS AND INCLUDING A STANDARD WARRANTY AND REGISTRATION. THE SYSTEM SHALL ALSO BE SUPPLIED WITH A COMPLETE INSTALLATION MANUAL WHICH INCLUDES, PARTS LISTS, ASSEMBLY INSTRUCTIONS, WIRING DIAGRAMS, TESTING INSTRUCTIONS AND A TROUBLE SHOOTING GUIDE.

3.02 SYSTEM REQUIREMENTS

A. THE SYSTEM SPECIFIED SHALL MEET ALL REQUIREMENTS OF THE ENCLOSED SPECIFICATIONS AND SHALL BE A MASS-PRODUCED, STANDARD SYSTEM OF A TYPE WHICH HAS BEEN IN PRODUCTION FOR A MINIMUM OF 14 YEARS WITH HUNDREDS OF SYSTEMS SOLD OF THE TYPE SPECIFIED. THE SUCCESSFUL BIDDER SHALL DELIVER WITH PRODUCT SUBMITTALS A VERIFIED REFERENCE LIST WITH PHOTO'S OF INSTALLATIONS. THE MATERIAL REQUIREMENTS SHALL INCLUDE COMPLETE INSTALLATION INSTRUCTIONS, A COMPLETE TESTING PROCURE AND OPERATING INSTRUCTIONS PAMPHLET INCLUDING TROUBLESHOOTING INSTRUCTIONS AND REPLACEMENT PARTS LIST AND INFORMATION ON HOW TO REPLACE EACH INDIVIDUAL COMPONENT IN THE SYSTEM.

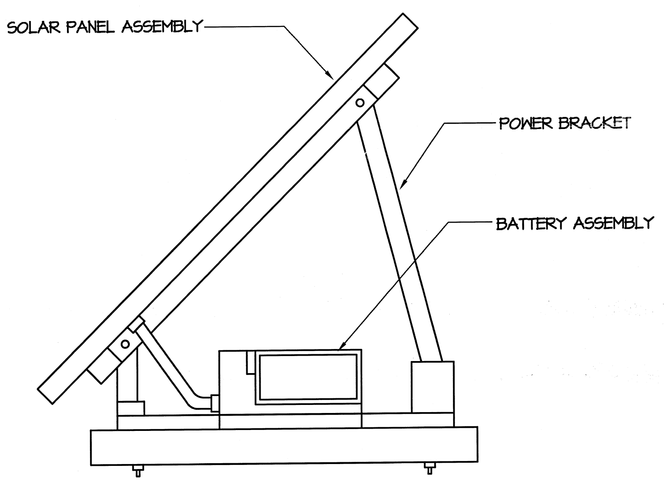

1 SOLAR POWER SYSTEM DETAIL
NO SCALE

CONSTRUCTION DOCUMENTS

CONSTRUCTION DOCUMENTS

Revisions | Date

REGISTERED PROFESSIONAL ENGINEER TIP SHING DONNY LEE No. E 017376 Exp. 3-30-14 ELECTRICAL STATE OF CALIFORNIA

ECOM ENGINEERING INC.
1796 TRIBUTE ROAD, SUITE 100
SACRAMENTO, CA. 95815
916.641.5600
916.641.1640 FAX
WWW.ECOMENG.COM
JOB NO. 10E286.00 PM MARK
DESIGNER MARK

JACOBS
Consultants in Architecture, Engineering, Planning, and the Environment
Sacramento Office
180 Promenade Circle, Suite 300
Sacramento, California 95834
(916) 929-3323 Fax (916) 929-1772

Subconsultant List

DREYFUSS & BLACKFORD	3540 FOLSOM BOULEVARD, SACRAMENTO, CA 95816 (916) 453-1234
CAPITAL ENGINEERING CONSULTANTS	11020 SUN CENTER DRIVE, RANCHO CORDOVA, CA 95670 (916) 851-3500
ECOM ENGINEERING INC.	1796 TRIBUTE ROAD, SUITE 100 SACRAMENTO, CA (916) 641-5600
BUEHLER & BUEHLER STRUCTURAL ENGINEERS, INC.	600 Q STREET, STE. 200, SACRAMENTO, CA. 95811 (916) 443-0303
W.L. BURLE ENGINEERS, PA	111 S. WALNUT STREET, GREENVILLE, MS 38702 (662) 332-2619
AQUA ENGINEERING, INC.	4803 INNOVATION DRIVE, FORT COLLINS, CO 80525 (970) 229-9668
THE SIERRA WEST GROUP, LLC	2730 GATEWAY OAKS DRIVE, STE. 110 SACRAMENTO, CA. 95833 (916) 925-4000

NATIONAL CEMETERY ADMINISTRATION

Drawing Title: SOLAR POWER SYSTEMS DETAILS – ADD-ALT. #5

Project Title: LOUISIANA NATIONAL CEMETERY GRAVESITE EXPANSION PHASE 1B

Date: OCTOBER 24, 2012

Project No. 870CM3023B

Approved: Director, Office of Construction Management

Approved: Director, Project Management Service

Building Number | Checked | Drawn

Location: LOUISIANA NATIONAL CEMETERY ZACHARY, LOUISIANA

DRAWING NO. 2000-E2

Dwg. 148 of 150

SHEET NOTES

1. REFER TO SHEET 4000-E2 FOR SOLAR SYSTEM REQUIREMENTS.
2. MULTI-WIRE BRANCH CIRCUITS ARE NOT ALLOWED. EACH UNGROUNDED SINGLE POLE CIRCUIT SHALL HAVE A SEPARATE NEUTRAL CONDUCTOR.

NUMBERED NOTES

1. CEILING FAN, 4W, 12VDC.
2. LOCATE AT SOUND SYSTEM SHELF.
3. TO SOLAR POWER SYSTEMS BATTERY ASSEMBLY. WIRE PER SOLAR POWER SYSTEM MANUFACTURER'S REQUIREMENTS.

CONSTRUCTION DOCUMENTS

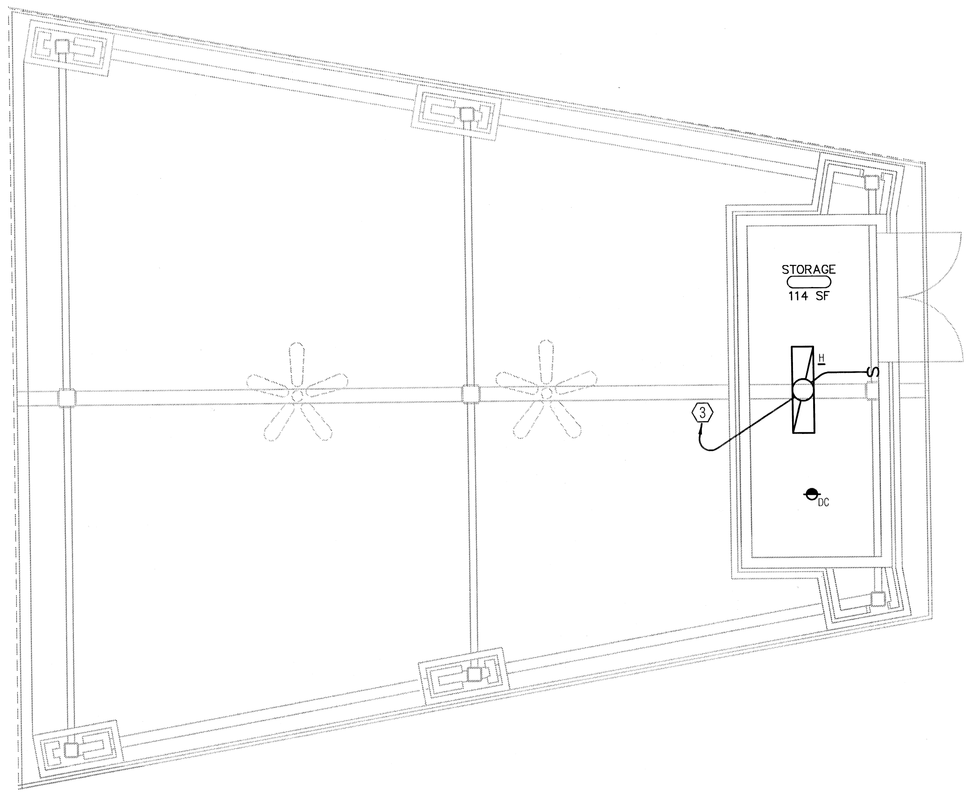

1 COMMITTAL SHELTER FLOOR PLAN - LIGHTING - ADD-ALT. #5

SCALE: 1/4"=1'-0"

NORTH

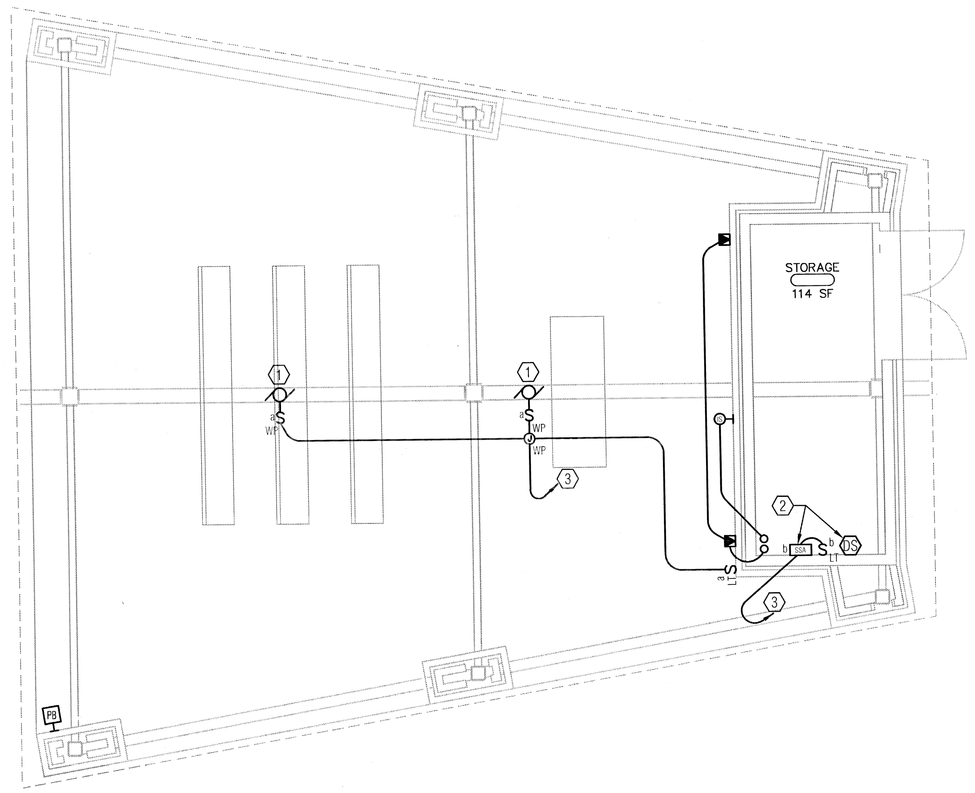

2 COMMITTAL SHELTER FLOOR PLAN - POWER & SIGNAL- ADD-ALT. #5

SCALE: 1/4"=1'-0"

NORTH

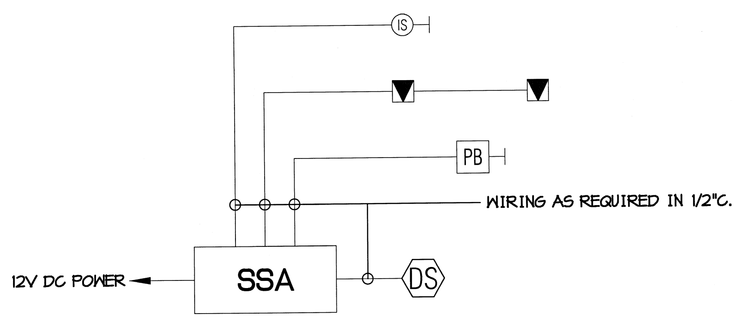

3 COMMITTAL SHELTER SOUND SYSTEM RISER DIAGRAM - ADD-ALT. #5

SCALE: NONE

SOUND SYSTEM NOTES

1. THIS CONTRACTOR SHALL FURNISH AND INSTALL AT COMMITTAL SHELTERS, A COMPLETE AND OPERATIONAL SOUND SYSTEM AS DESCRIBED WITHIN THESE PLANS.
2. SYSTEM SHALL BE TESTED, CERTIFIED AND FULLY OPERATIONAL PRIOR TO OWNER ACCEPTANCE. PROVIDE ENGINEER WITH WRITTEN CERTIFICATION AFTER SYSTEM HAS BEEN PROPERLY TESTED.
3. ALL WORK PERFORMED AND ALL MATERIAL AND EQUIPMENT FURNISHED UNDER THIS CONTRACT SHALL BE FREE FROM DEFECTS AND SHALL REMAIN SO FOR A PERIOD OF AT LEAST ONE (1) YEAR FROM THE DATE OF ACCEPTANCE. THE FULL COST OF MAINTENANCE, LABOR, AND MATERIALS REQUIRED TO CORRECT AND DEFECT DURING THIS ONE YEAR PERIOD SHALL BE INCLUDED IN THE SUBMITTAL BID.

SOUND SYSTEM SYMBOLS

- SOUND SYSTEM - MIXER/AMPLIFIER - TOA CA-160 OR EQUAL 60 WATT AMPLIFIER - MOUNT ON CONTRACTOR PROVIDED SHELF WITHIN STORAGE SHELTER STORAGE CLOSET.
- SOUND SYSTEM - FLUSH IN WALL WEATHER RESISTANT SPEAKER - ATLAS SOUND 8CXT60 SPEAKER WITH VP161-RB BAFFLE AND Q-SERIES ENCLOSURE OR EQUAL PROVIDE MOUNTING ACCESSORIES AS REQUIRED FOR INSTALLATION IN BRICK VENEER. CONTRACTOR SHALL COORDINATE BRICK OPENING & SUPPORT FOR ENCLOSURES FROM WALL STUDS.
- SOUND SYSTEM - FLUSH IN WALL MOUNTED INFRARED SENSOR.
- SOUND SYSTEM - MP3 DOCKING STATION - APPLE OR EQUAL UNIVERSAL DOCKING STATION - VELCRO MOUNT TO MIXER/ AMPLIFIER.
- SOUND SYSTEM - CONTROL STATION - CUSTOM "ON/OFF" SWITCH ON STAINLESS STEEL PLATE.

CONSTRUCTION DOCUMENTS

Revisions	Date

REGISTERED PROFESSIONAL ENGINEER — JAMES DONATO LEE — No. E 017376 — Exp. 9-30-14 — ELECTRICAL — STATE OF CALIFORNIA

ECOM ENGINEERING INC.
1796 TRIBUTE ROAD, SUITE 100
SACRAMENTO, CA. 95815
916.641.5600
916.641.1640 FAX
WWW.ECOMENG.COM
JOB NO. 10E286.00 PM MARK
DESIGNER MARK

JACOBS
Consultants in Architecture, Engineering, Planning, and the Environment
Sacramento Office
180 Promenade Circle, Suite 300
Sacramento, California 95834
(916) 929-3323 Fax (916) 929-1772

Subconsultant List

DREYFUSS & BLACKFORD	3540 FOLSOM BOULEVARD, SACRAMENTO, CA 95816 (916) 453-1234
CAPITAL ENGINEERING CONSULTANTS	11020 SUN CENTER DRIVE, RANCHO CORDOVA, CA 95670 (916) 851-3500
ECOM ENGINEERING INC.	1796 TRIBUTE ROAD, SUITE 100 SACRAMENTO, CA (916) 641-5600
BUEHLER & BUEHLER STRUCTURAL ENGINEERS, INC.	600 Q STREET, STE. 200, SACRAMENTO, CA. 95811 (916) 443-0303
W.L. BURLE ENGINEERS, PA	111 S. WALNUT STREET, GREENVILLE, MS 38702 (662) 332-2619
AQUA ENGINEERING, INC.	4803 INNOVATION DRIVE, FORT COLLINS, CO 80525 (970) 229-9668
THE SIERRA WEST GROUP, LLC	2730 GATEWAY OAKS DRIVE, STE. 110 SACRAMENTO, CA. 95833 (916) 925-4000

NATIONAL CEMETERY ADMINISTRATION

Drawing Title	COMMITTAL SHELTER FLOOR PLANS – ELECTRICAL – ADD-ALT. #5
Project Title	LOUISIANA NATIONAL CEMETERY GRAVESITE EXPANSION PHASE 1B
Date	OCTOBER 24, 2012
Project No.	870CM3023B
Approved: Director, Office of Construction Management	
Building Number / Checked / Drawn	
Approved: Director, Project Management Service	
Location	LOUISIANA NATIONAL CEMETERY ZACHARY, LOUISIANA
DRAWING NO.	2000-E1
Dwg. 147 of 150	

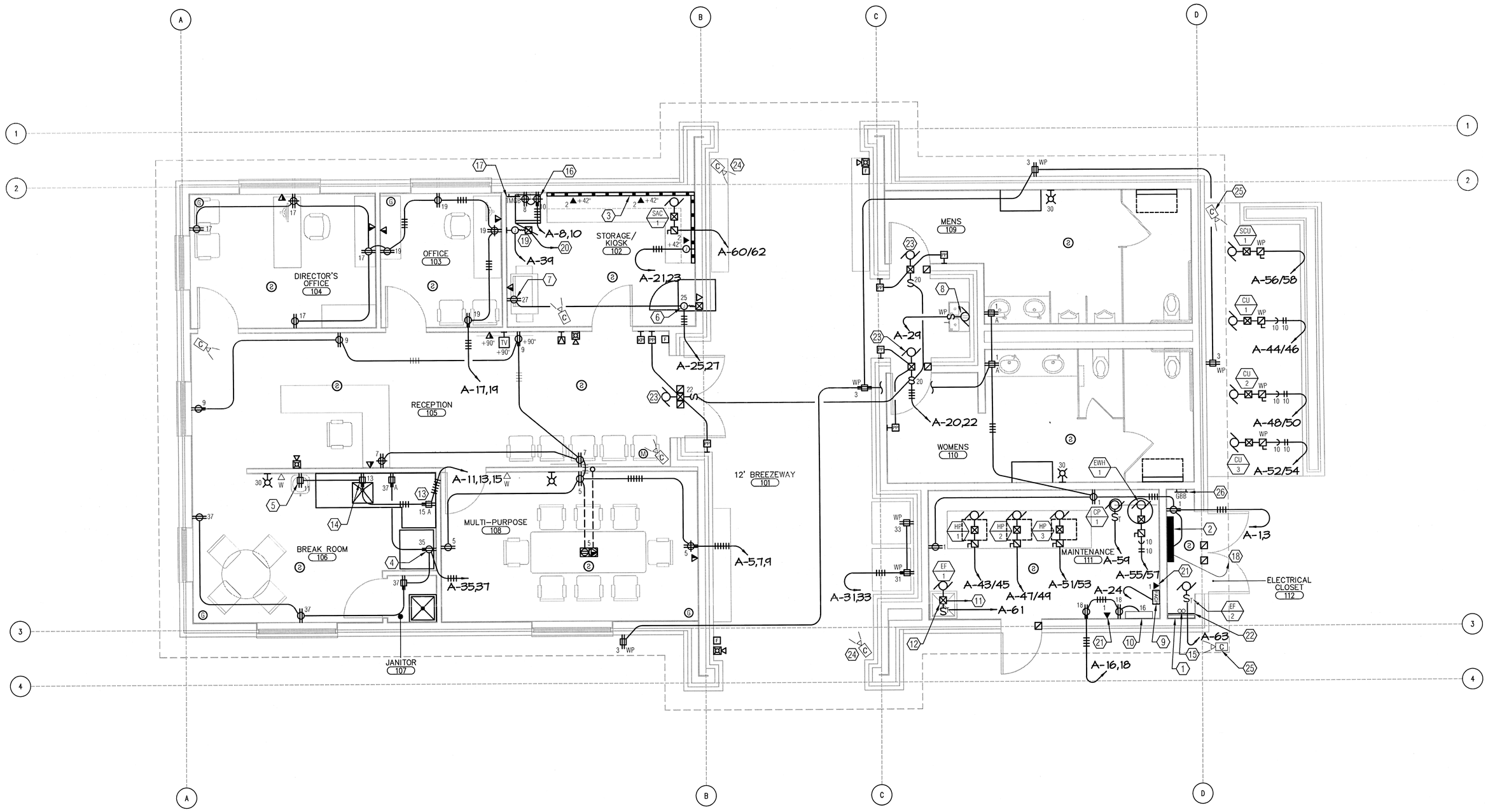

1 PIC/ADMINISTRATION FLOOR PLAN - POWER & SIGNAL- ADD-ALT. #8

SCALE: 1/4"=1'-0"

NORTH

SHEET NOTES

1. MULTI-WIRE BRANCH CIRCUITS ARE NOT ALLOWED. EACH UNGROUNDED SINGLE POLE CIRCUIT SHALL HAVE A SEPARATE NEUTRAL CONDUCTOR.

NUMBERED NOTES

1. 2'x8' TELECOMMUNICATIONS ENTRY AND TERMINAL BACKBOARD. SPLICE POINT FOR 25-PAIR AND 12-STRAND FIBER TRANSITION. GROUND ARMORED CABLE AT TELECOMMUNICATIONS GROUNDING BUS BAR.
2. SERVICE PANEL 'A' 200A, 120/240V, 1Φ.
3. MOUNT WIREMOLD ABOVE COUNTER.
4. REFRIGERATOR, 120V.
5. WATER COOLER, 120V.
6. GRAVE LOCATOR, 120V.
7. COPIER, 120V.
8. DRINKING FOUNTAIN, 120V.
9. FIRE ALARM CONTROL PANEL.
10. INTRUSION ALARM PANEL.
11. 1" CONDUIT FOR LOW VOLTAGE CONTROL WIRES. CONNECT TO HP-1, HP-2 & HP-3.
12. SWITCH WITH LIGHTS. SEE EF CONTROL DIAGRAM ON 1/E7.
13. MICROWAVE, 120V.
14. GARBAGE DISPOSAL, 120V.
15. (2) 1 1/2" CONDUITS CONNECTING IDF TO TELEPHONE TERMINAL BACKBOARD.
16. IDF CABINET.
17. TELEPHONE GROUND BUS BAR. LOCATE ABOVE FINISHED CEILING.
18. PROVIDE 1 1/2" CONDUIT TO ROOF FOR FUTURE SOLAR PANEL.
19. FIRE SUPPRESSION SYSTEM.
20. TIE INTO FIRE ALARM SYSTEM INITIATING DEVICE CIRCUIT FOR FIRE PROTECTION SYSTEM.
21. TERMINATE ON 110 TERMINATION BLOCK IN IDF CABINET.
22. TELECOMMUNICATIONS MAIN GROUND BUSS BAR.
23. DOOR OPERATOR, 120V.
24. CEILING MOUNTED SECURITY CAMERA.
25. EAVE MOUNTED SECURITY CAMERA.
26. GROUND BUSS BAR.

CONSTRUCTION DOCUMENTS

CONSTRUCTION DOCUMENTS

Revisions	Date

REGISTERED PROFESSIONAL ENGINEER
TIP SHING DONNY LEE
No. E 017376
Exp. 9-30-14
ELECTRICAL
STATE OF CALIFORNIA

ECOM ENGINEERING INC.
1796 TRIBUTE ROAD, SUITE 100
SACRAMENTO, CA. 95815
916.641.5600
916.641.1640 FAX
WWW.ECOMENG.COM

JOB NO. 10E286.00 PM MARK
DESIGNERS MARK

JACOBS
Consultants in Architecture, Engineering, Planning, and the Environment
Sacramento Office
180 Promenade Circle, Suite 300
Sacramento, California 95834
(916) 929-3323 Fax (916) 929-1772

Subconsultant List

DREYFUSS & BLACKFORD	3540 FOLSOM BOULEVARD, SACRAMENTO, CA 95816 (916) 453-1234
CAPITAL ENGINEERING CONSULTANTS	11020 SUN CENTER DRIVE, RANCHO CORDOVA, CA 95670 (916) 851-3500
ECOM ENGINEERING INC.	1796 TRIBUTE ROAD, SUITE 100 SACRAMENTO, CA (916) 641-5600
BUEHLER & BUEHLER STRUCTURAL ENGINEERS, INC.	600 Q STREET, STE. 200, SACRAMENTO, CA. 95811 (916) 443-0303
W.L. BURLE ENGINEERS, PA	111 S. WALNUT STREET, GREENVILLE, MS 38702 (662) 332-2619
AQUA ENGINEERING, INC.	4803 INNOVATION DRIVE, FORT COLLINS, CO 80525 (970) 229-9668
THE SIERRA WEST GROUP, LLC	2730 GATEWAY OAKS DRIVE, STE. 110 SACRAMENTO, CA. 95833 (916) 925-4000

NATIONAL CEMETERY ADMINISTRATION

Drawing Title	P.I.C./ADMINISTRATION FLOOR PLAN – POWER & SIGNAL– ADD–ALT. #8
Approved: Director, Office of Construction Management	
Approved: Director, Project Management Service	
Project Title	LOUISIANA NATIONAL CEMETERY GRAVESITE EXPANSION PHASE 1B
Building Number	
Checked	
Drawn	
Location	LOUISIANA NATIONAL CEMETERY ZACHARY, LOUISIANA
Date:	OCTOBER 24, 2012
Project No.	870CM3023B
DRAWING NO.	1400-E2
Dwg.	146 of 150

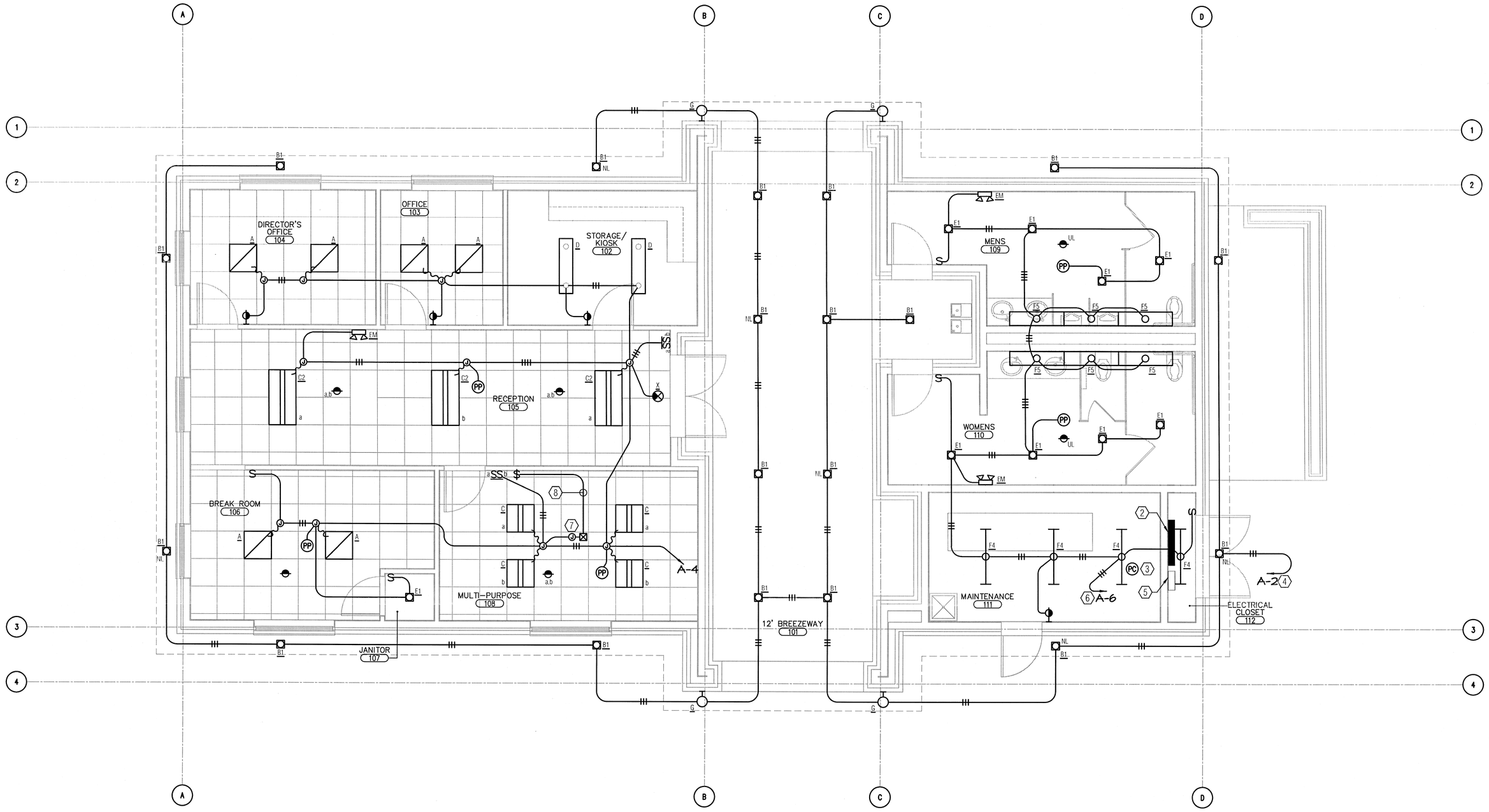

1 PIC/ADMINISTRATION FLOOR PLAN - LIGHTING - ADD-ALT. #8

SCALE: 1/4"=1'-0"

NORTH

SHEET NOTES

1. REFER TO SHEET E-3 FOR MOTION SWITCHING SYSTEM WIRING DIAGRAM.
2. PROVIDE UNSWITCHED 'HOT' TO EXIT SIGNS AND EMERGENCY LIGHTS.
3. MULTI-WIRE BRANCH CIRCUITS ARE NOT ALLOWED. EACH UNGROUNDED SINGLE POLE CIRCUIT SHALL HAVE A SEPARATE NEUTRAL CONDUCTOR.

NUMBERED NOTES

1. NOT USED.
2. SERVICE PANEL 'A'.
3. PHOTO CELL MOUNTED ON ROOF ROUTE TO LCP.
4. VIA LIGHTING CONTROL PANEL.
5. LCP WATTSTOPPER LP8 PEANUT LIGHTING CONTROL. PANEL, MODEL #LP8F-8-115. SEE 1/E-3.
6. VIA LIGHTING CONTROL PANEL. PROVIDE UNSWITCHED 'HOT' TO EMERGENCY LIGHTS.
7. SKYLIGHT DIMMER, 120V, 0.05A.
8. LOW VOLTAGE CABLES FOR SKY LIGHT DIMMER CONTROLS.

CONSTRUCTION DOCUMENTS

CONSTRUCTION DOCUMENTS

Revisions	Date

REGISTERED PROFESSIONAL ENGINEER
YIP SHING DONNY LEE
No. E 017376
Exp. 9-30-14
ELECTRICAL
STATE OF CALIFORNIA

ECOM ENGINEERING INC.
1796 TRIBUTE ROAD, SUITE 100
SACRAMENTO, CA. 95815
916.641.5600
916.641.1640 FAX
WWW.ECOMENG.COM
JOB NO. 10E286.00 PM. MARK
DESIGNERS MARK

JACOBS
Consultants in Architecture, Engineering, Planning, and the Environment
Sacramento Office
180 Promenade Circle, Suite 300
Sacramento, California 95834
(916) 929-3323 Fax (916) 929-1772

Subconsultant List

DREYFUSS & BLACKFORD	3540 FOLSOM BOULEVARD, SACRAMENTO, CA 95816 (916) 453-1234
CAPITAL ENGINEERING CONSULTANTS	11020 SUN CENTER DRIVE, RANCHO CORDOVA, CA 95670 (916) 851-3500
ECOM ENGINEERING INC.	1796 TRIBUTE ROAD, SUITE 100 SACRAMENTO, CA (916) 641-5600
BUEHLER & BUEHLER STRUCTURAL ENGINEERS, INC.	600 Q STREET, STE. 200, SACRAMENTO, CA. 95811 (916) 443-0303
W.L. BURLE ENGINEERS, PA	111 S. WALNUT STREET, GREENVILLE, MS 38702 (662) 332-2619
AQUA ENGINEERING, INC.	4803 INNOVATION DRIVE, FORT COLLINS, CO 80525 (970) 229-9668
THE SIERRA WEST GROUP, LLC	2730 GATEWAY OAKS DRIVE, STE. 110 SACRAMENTO, CA. 95833 (916) 925-4000

NATIONAL CEMETERY ADMINISTRATION

Drawing Title: P.I.C./ADMINISTRATION FLOOR PLAN – LIGHTING – ADD-ALT. #8	Project Title: LOUISIANA NATIONAL CEMETERY GRAVESITE EXPANSION PHASE 1B		Date: OCTOBER 24, 2012
Approved: Director, Office of Construction Management	Building Number	Checked	Drawn
Approved: Director, Project Management Service	Location: LOUISIANA NATIONAL CEMETERY ZACHARY, LOUISIANA		Project No. 870CM3023B
			DRAWING NO. 1400-E1
			Dwg. 145 of 150

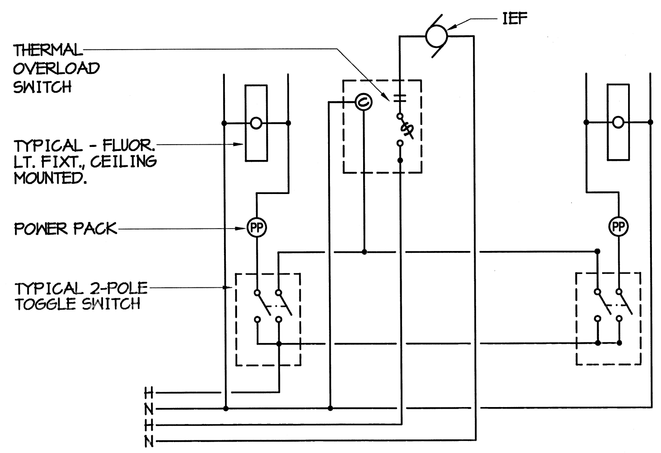

1 EF AND LIGHTING CONTROL SCHEMATIC - PIC/ADMIN BUILDING

NO SCALE

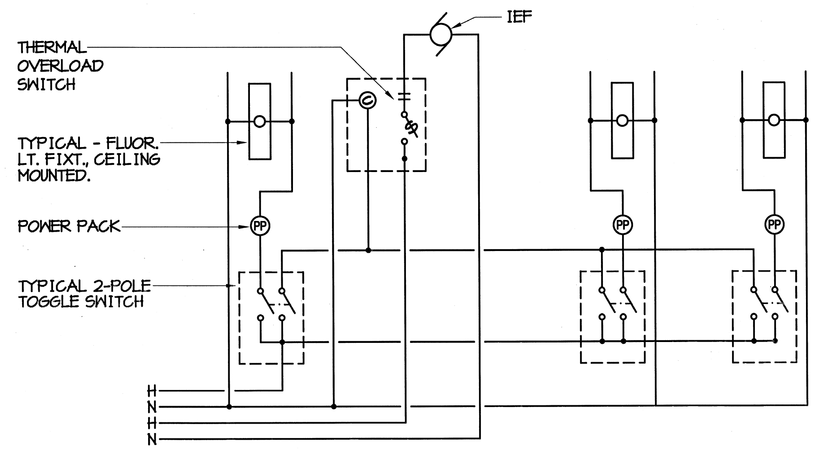

2 EF AND LIGHTING CONTROL SCHEMATIC - MAINTENANCE BLDG.

NO SCALE

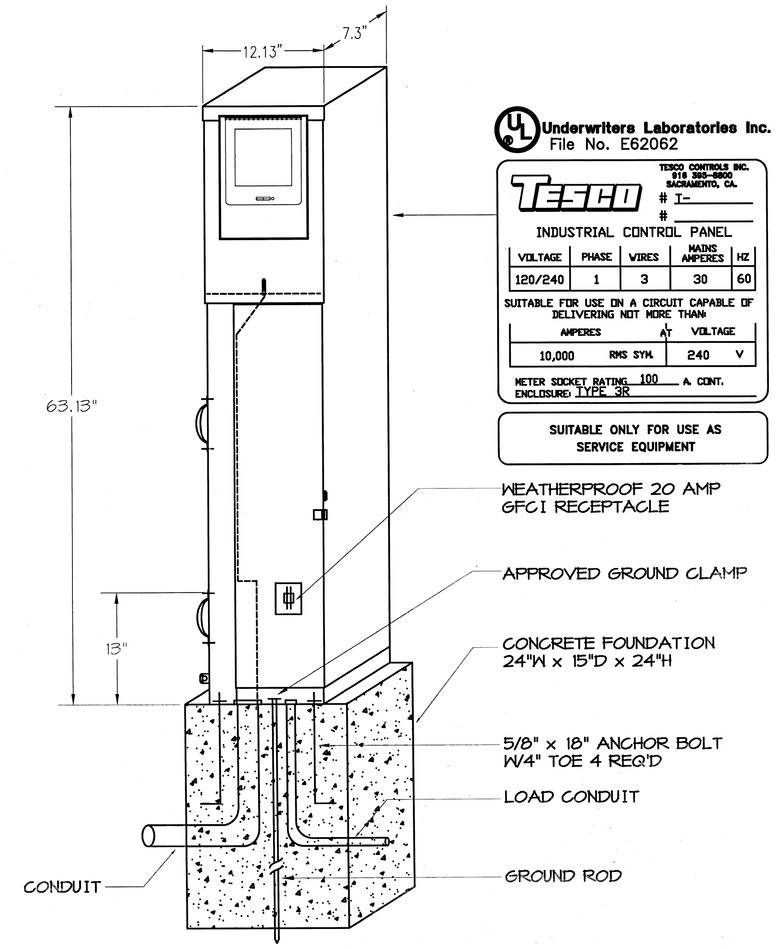

FRONT VIEW

Underwriters Laboratories Inc.
File No. E62062

TESCO CONTROLS INC.
914 SEC-DRIVE
SACRAMENTO, CA.
I-
#

INDUSTRIAL CONTROL PANEL

VOLTAGE	PHASE	WIRES	MAINS AMPERES	HZ
120/240	1	3	30	60

SUITABLE FOR USE ON A CIRCUIT CAPABLE OF DELIVERING NOT MORE THAN

AMPERES		AT	VOLTAGE
10,000	RMS SYM.		240 V

METER SOCKET RATING 100 A CONT.
ENCLOSURE TYPE 3R

SUITABLE ONLY FOR USE AS SERVICE EQUIPMENT

ENCLOSURE CONSTRUCTION NOTES

1. FABRICATED FROM 14 GA. #304 D STAINLESS STEEL AND INT. 14 GA. COLD COLD ROLLED ELECTRICALLY WELDED AND REINFORCED WHERE REQUIRED.
2. CONSTRUCTION WILL BE NEMA 3R, RAINTIGHT.
3. ALL NUTS, BOLTS AND SCREWS WILL BE STAINLESS STEEL.
4. NUTS, BOLTS & SCREWS WILL NOT BE VISIBLE FROM OUTSIDE OF ENCLOSURE.
5. NAMEPLATES WILL BE PROVIDED AS REQUIRED.
6. CONTROL WIRING WILL BE MARKED AT BOTH ENDS BY PERMANENT WIRE MARKERS.
7. A PLASTIC COVERED WIRING DIAGRAM WILL BE ATTACHED TO THE INSIDE OF THE FRONT DOOR.
8. ENCLOSURE WILL BE FACTORY WIRED AND CONFORM TO REQUIRED NEMA STANDARDS AND SHALL BEAR A UL 508 LABEL.

3 SERVICE PEDESTAL ELEVATION

NO SCALE

CONSTRUCTION DOCUMENTS

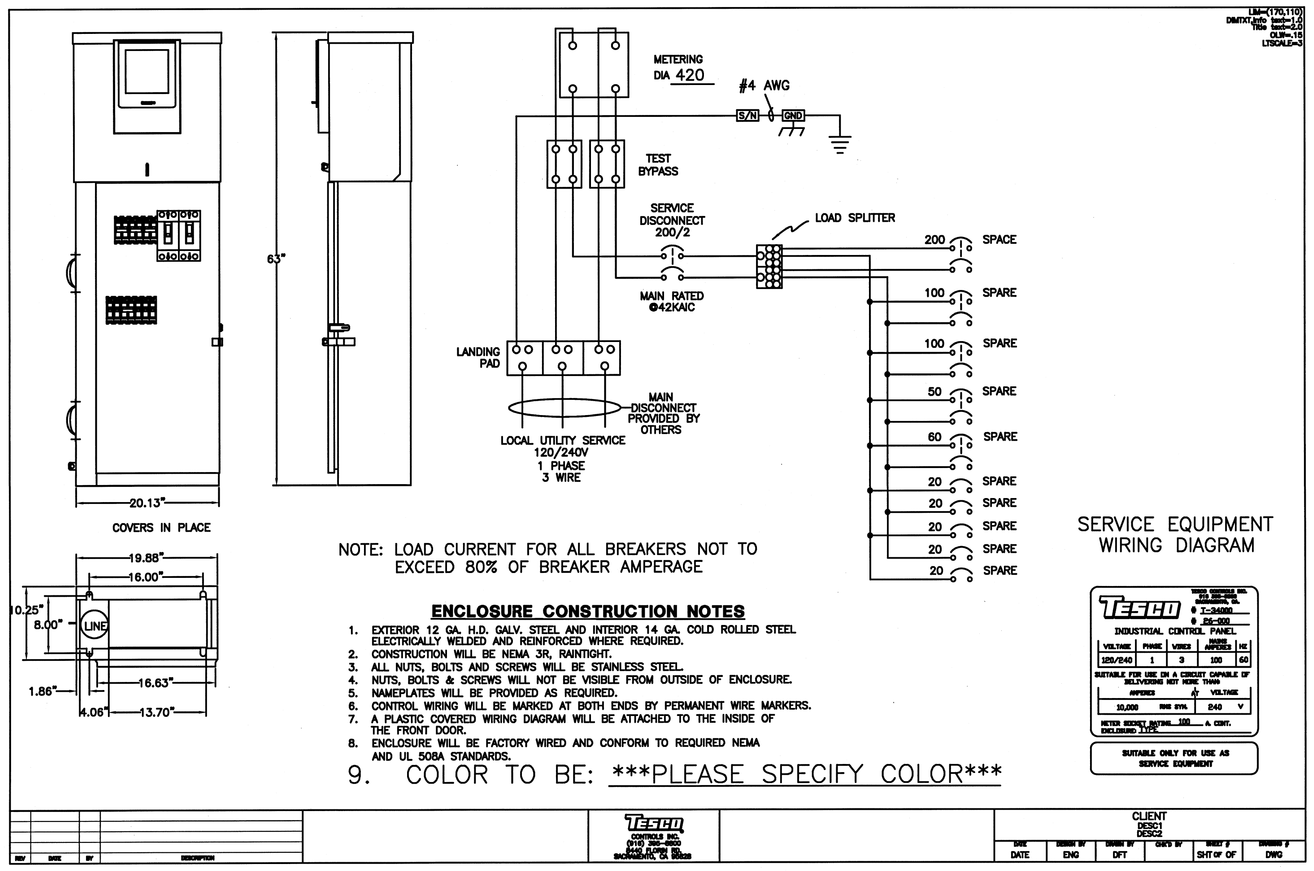

4 UTILITY SERVICE PEDESTAL ELEVATION

NO SCALE

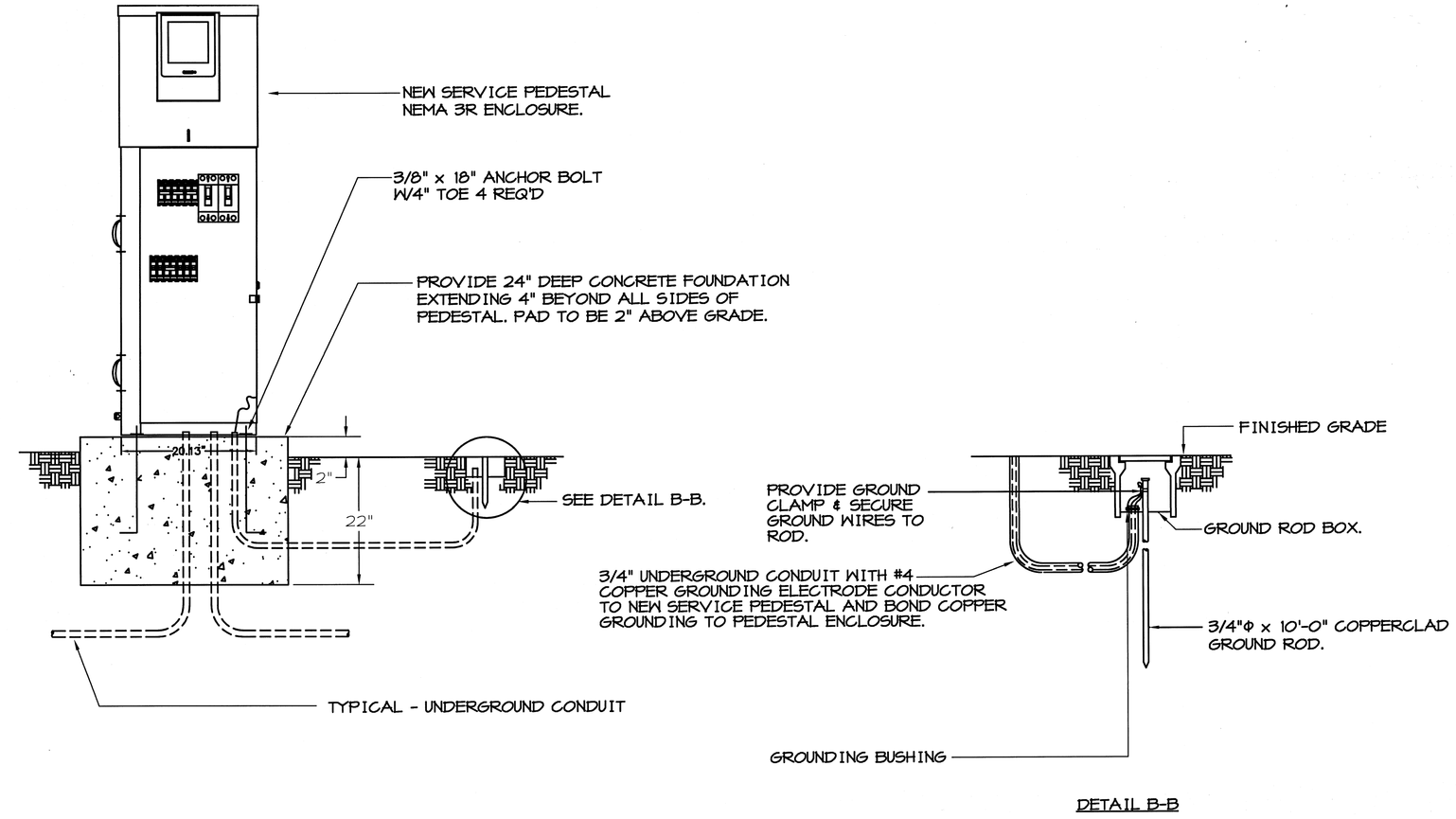

DETAIL B-B

5 SERVICE PEDESTAL FOOTING AND GROUNDING DETAIL

NO SCALE

CONSTRUCTION DOCUMENTS

Revisions	Date

REGISTERED PROFESSIONAL ENGINEER
VIC SHING DONNY LEE
No. E 017376
Exp. 9-30-14
ELECTRICAL
STATE OF CALIFORNIA

ECOM ENGINEERING INC.
1796 TRIBUTE ROAD, SUITE 100
SACRAMENTO, CA. 95815
916.641.5600
916.641.1640 FAX
WWW.ECOMENG.COM
JOB NO. 10E286.00 PM. MARK
DESIGNERS MARK

JACOBS
Consultants in Architecture, Engineering, Planning, and the Environment
Sacramento Office
180 Promenade Circle, Suite 300
Sacramento, California 95834
(916) 929-3323 Fax (916) 929-1772

Subconsultant List

DREYFUSS & BLACKFORD	3540 FOLSOM BOULEVARD, SACRAMENTO, CA 95816 (916) 453-1234
CAPITAL ENGINEERING CONSULTANTS	11020 SUN CENTER DRIVE, RANCHO CORDOVA, CA 95670 (916) 851-3500
ECOM ENGINEERING INC.	1796 TRIBUTE ROAD, SUITE 100 SACRAMENTO, CA (916) 641-5600
BUEHLER & BUEHLER STRUCTURAL ENGINEERS, INC.	600 Q STREET, STE. 200, SACRAMENTO, CA. 95811 (916) 443-0303
W.L. BURLE ENGINEERS, PA	111 S. WALNUT STREET, GREENVILLE, MS 38702 (662) 332-2619
AQUA ENGINEERING, INC.	4803 INNOVATION DRIVE, FORT COLLINS, CO 80525 (970) 229-9668
THE SIERRA WEST GROUP, LLC	2730 GATEWAY OAKS DRIVE, STE. 110 SACRAMENTO, CA. 95833 (916) 925-4000

NATIONAL CEMETERY ADMINISTRATION

Drawing Title: ELECTRICAL DETAILS

Project Title: LOUISIANA NATIONAL CEMETERY GRAVESITE EXPANSION PHASE 1B

Date: OCTOBER 24, 2012

Project No. 870CM3023B

Approved: Director, Office of Construction Management

Building Number | Checked | Drawn

Approved: Director, Project Management Service

Location: LOUISIANA NATIONAL CEMETERY ZACHARY, LOUISIANA

DRAWING NO. E-9

Dwg. 144 of 150

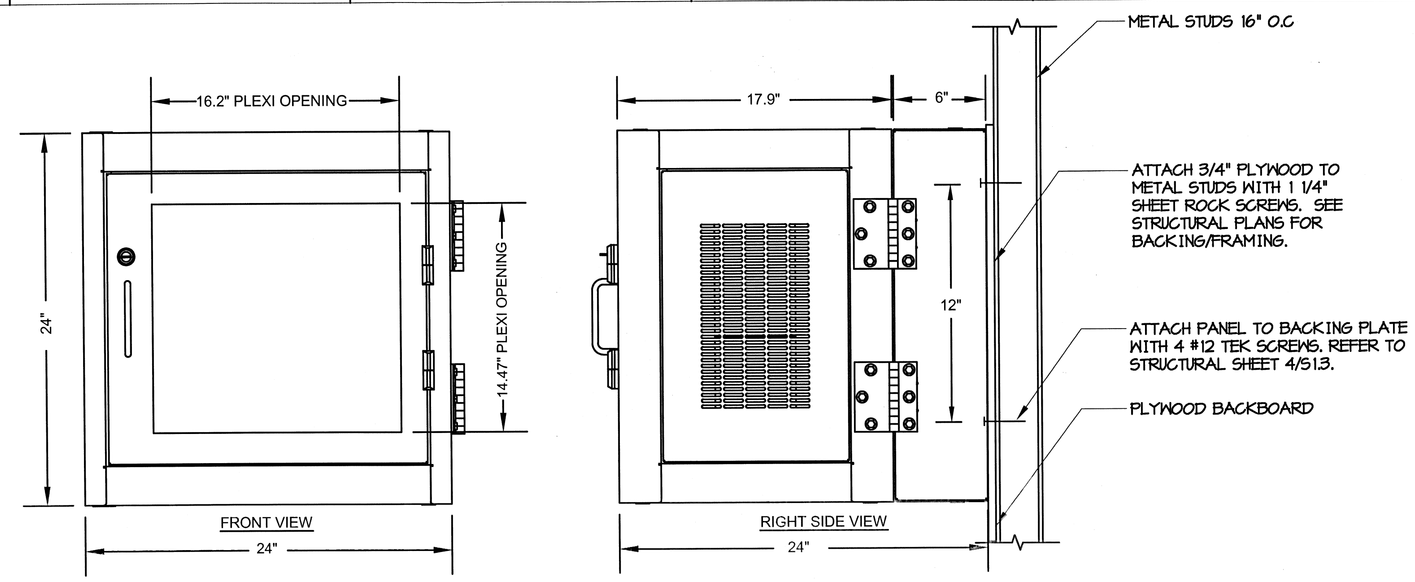

NOTES:
1. USE FENDER WASHERS ON ALL SCREWS.
2. WEIGHT- 250 LBS. MAXIMUM
2. MOUNT 6" FROM CEILING

1 WALL MOUNT EQUIPMENT RACK MOUNTING DETAIL (IDF)

NO SCALE

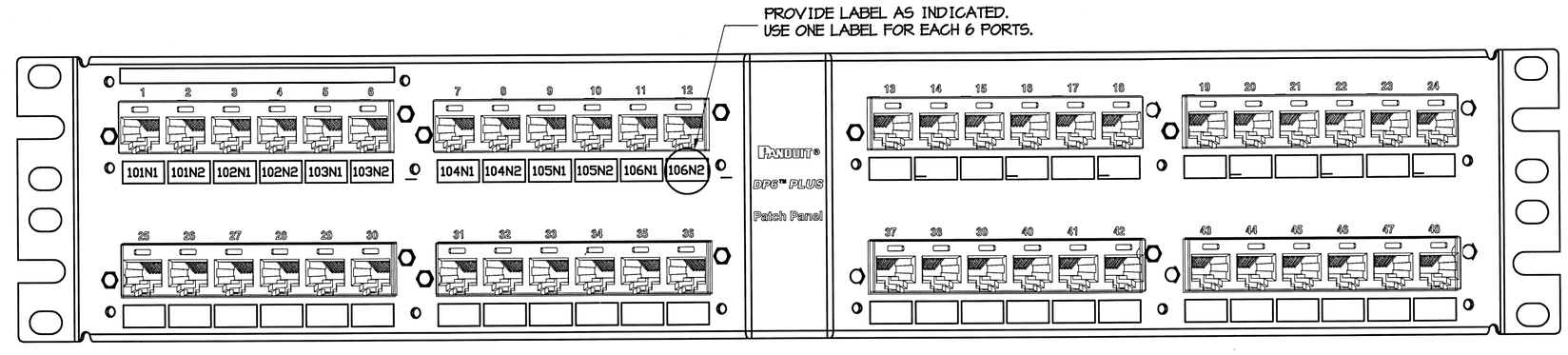

2 DATA PATCH PANEL LABELING DETAIL- TYPICAL

NO SCALE

CONSTRUCTION DOCUMENTS

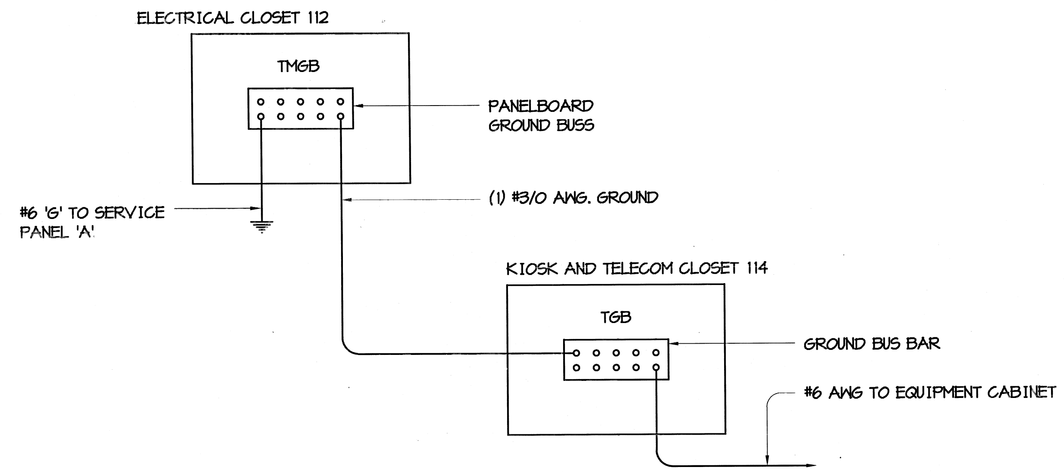

3 GROUNDING DIAGRAM - ADMINISTRATION BUILDING

NO SCALE

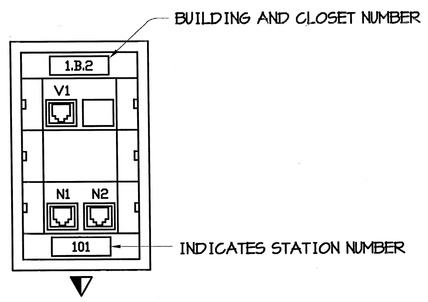

4 WALL MOUNTED OUTLET DESIGNATION DETAIL - TYPICAL

NO SCALE

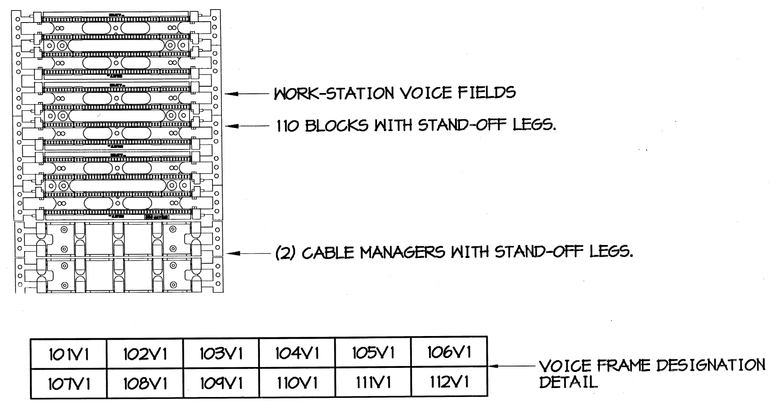

5 VOICE FRAME AND LABELING DETAIL - TYPICAL

NO SCALE

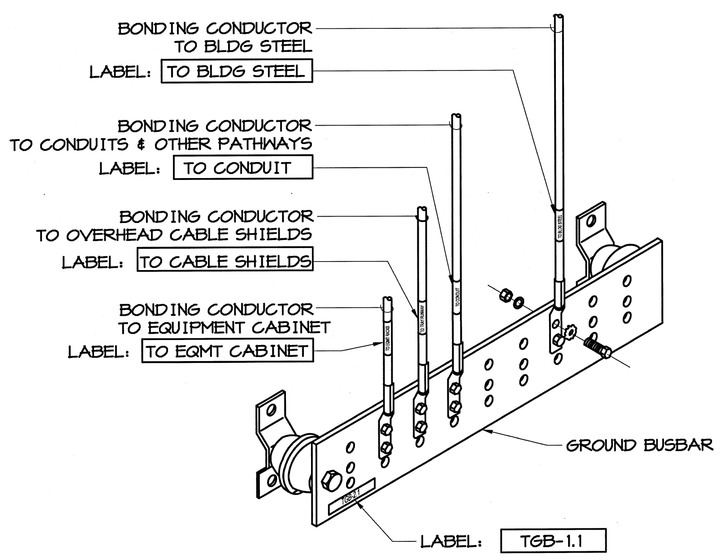

NOTES: REFER TO ROOM PLANS FOR BUSBAR MOUNTING LOCATION.
REFER TO GROUNDING RISER DIAGRAM FOR LIST OF EQUIPMENT REQUIRING GROUNDING.

6 GROUND BUS BAR DETAIL

NO SCALE

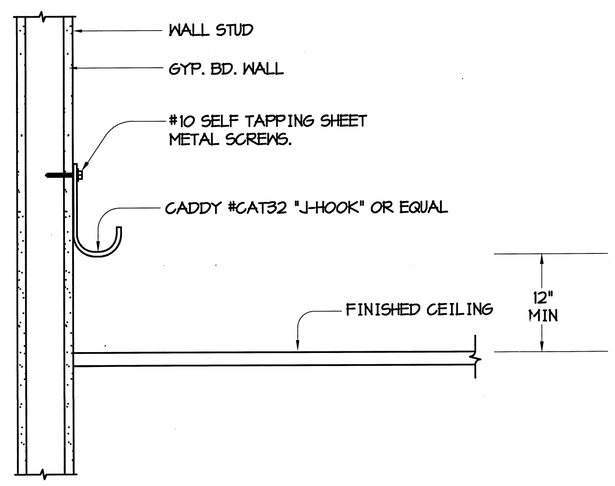

NOTES:
1. PROVIDE SEPARATE CABLE MANAGEMENT SYSTEM FOR EACH INDIVIDUAL LOW VOLTAGE SYSTEM.
2. PROVIDE ADDITIONAL HOOKS TO ACCOMMODATE NUMBER OF CABLES AT LOCATIONS IN PATHWAY. LEAVE 25% SPACE CAPACITY FOR FUTURE CABLE INSTALLATION.
3. SPACING BETWEEN J-HOOKS SHALL BE 48" ON CENTER.

7 WALL-MOUNTED J-HOOK DETAIL FOR METAL STUD

NO SCALE

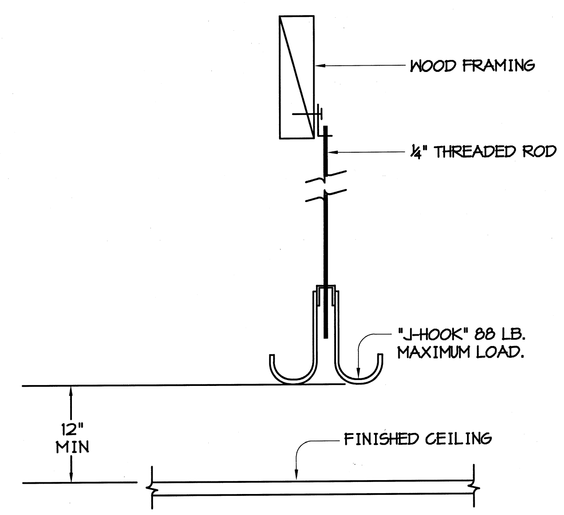

NOTES:
1. PROVIDE SEPARATE CABLE MANAGEMENT SYSTEM FOR EACH INDIVIDUAL LOW VOLTAGE SYSTEMS. (VOICE & DATA)
2. LEAVE 25% SPACE CAPACITY FOR FUTURE CABLE INSTALLATION.
3. SPACING BETWEEN J-HOOKS SHALL BE 48" ON CENTER.

8 J-HOOK DETAIL- TYPICAL

NO SCALE

CONSTRUCTION DOCUMENTS

Revisions	Date

REGISTERED PROFESSIONAL ENGINEER VIPIN SHING DONNY LEE No. E 017376 Exp. 9-30-14 ELECTRICAL STATE OF CALIFORNIA

ECOM ENGINEERING INC.
1796 TRIBUTE ROAD, SUITE 100
SACRAMENTO, CA. 95815
916.641.5600
916.641.1640 FAX
WWW.ECOMENG.COM
JOB NO. 10E286.00 PM MARK
DESIGNERS MARK

JACOBS
Consultants in Architecture, Engineering, Planning, and the Environment
Sacramento Office
180 Promenade Circle, Suite 300
Sacramento, California 95834
(916) 929-3323 Fax (916) 929-1772

Subconsultant List	
DREYFUSS & BLACKFORD	3540 FOLSOM BOULEVARD, SACRAMENTO, CA 95816 (916) 453-1234
CAPITAL ENGINEERING CONSULTANTS	11020 SUN CENTER DRIVE, RANCHO CORDOVA, CA 95670 (916) 851-3500
ECOM ENGINEERING INC.	1796 TRIBUTE ROAD, SUITE 100 SACRAMENTO, CA (916) 641-5600
BUEHLER & BUEHLER STRUCTURAL ENGINEERS, INC.	600 Q STREET, STE. 200, SACRAMENTO, CA. 95811 (916) 443-0303
W.L. BURLE ENGINEERS, PA	111 S. WALNUT STREET, GREENVILLE, MS 38702 (662) 332-2619
AQUA ENGINEERING, INC.	4803 INNOVATION DRIVE, FORT COLLINS, CO 80525 (970) 229-9668
THE SIERRA WEST GROUP, LLC	2730 GATEWAY OAKS DRIVE, STE. 110 SACRAMENTO, CA. 95833 (916) 925-4000

NATIONAL CEMETERY ADMINISTRATION

Drawing Title: ELECTRICAL DETAILS	Project Title: LOUISIANA NATIONAL CEMETERY GRAVESITE EXPANSION PHASE 1B		Date: OCTOBER 24, 2012
Approved: Director, Office of Construction Management	Building Number	Checked / Drawn	Project No. 870CM3023B
Approved: Director, Project Management Service	Location: LOUISIANA NATIONAL CEMETERY ZACHARY, LOUISIANA		DRAWING NO. E-8 Dwg. 143 of 150

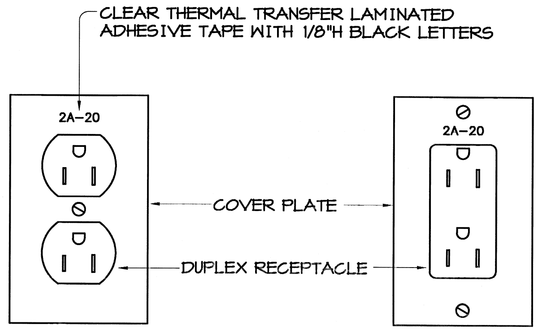

1 OUTLET DESIGNATION DETAIL

NO SCALE

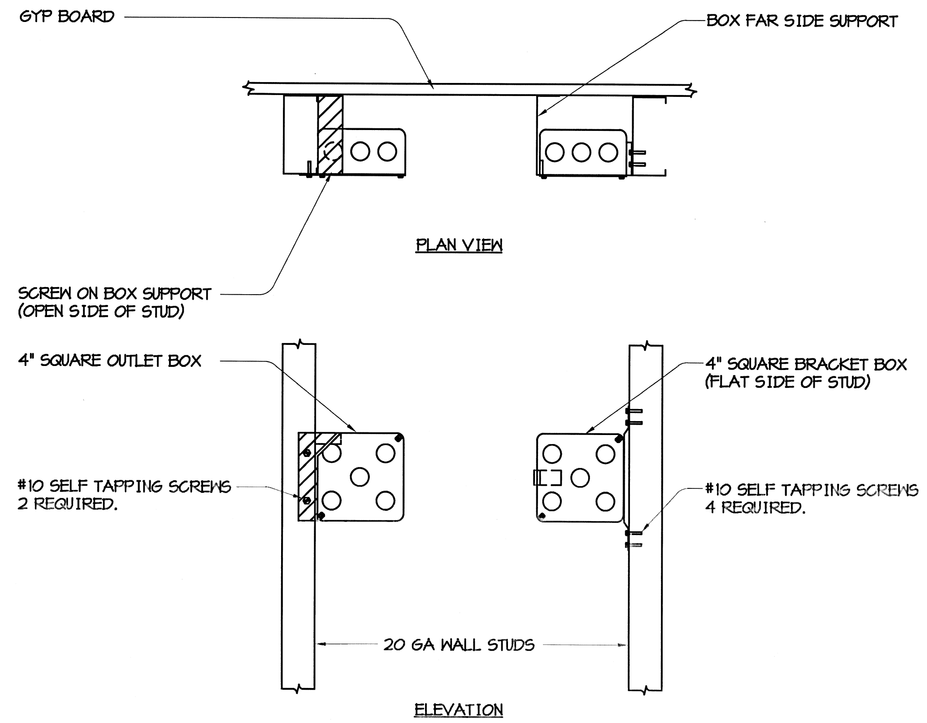

2 BOX SUPPORT (ON STUD)

NO SCALE

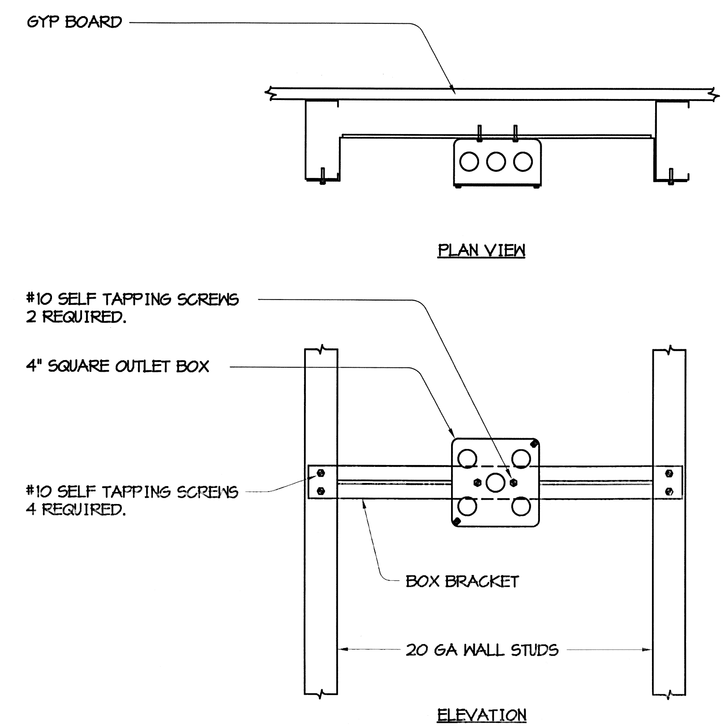

3 BOX SUPPORT (BETWEEN STUDS)

NO SCALE

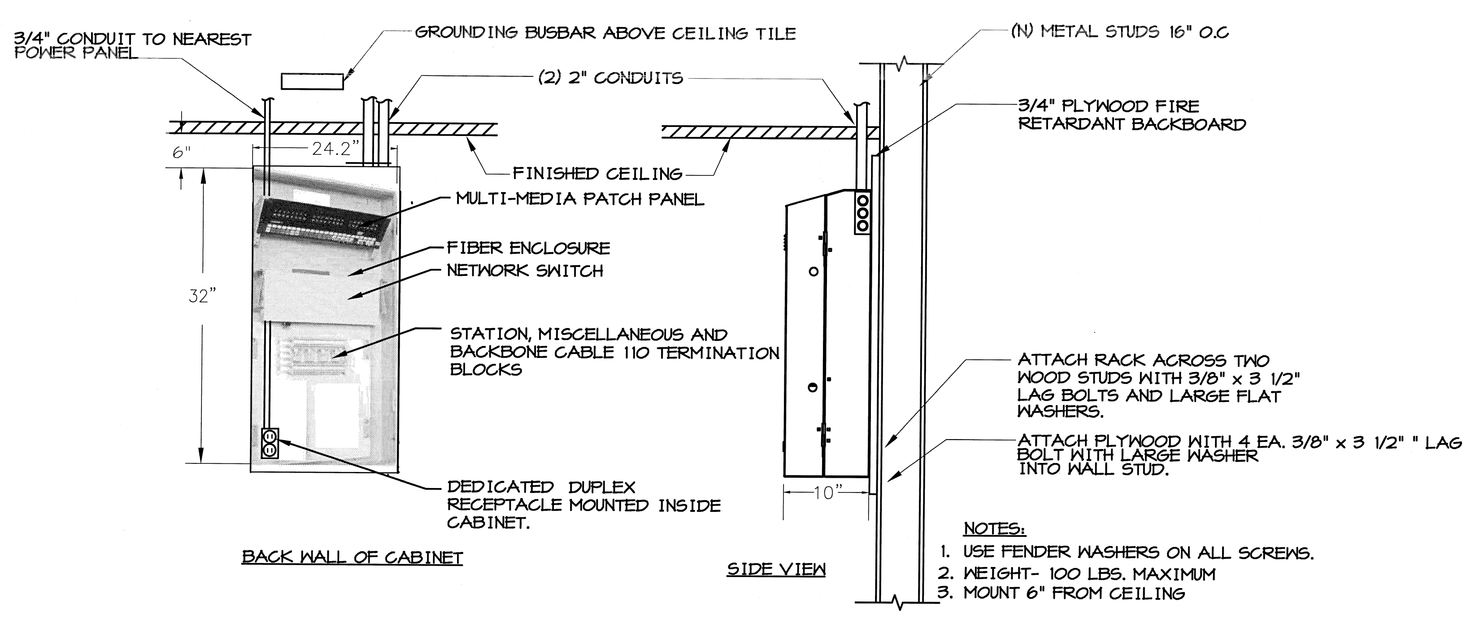

NOTES:

1. USE FENDER WASHERS ON ALL SCREWS.
2. WEIGHT- 100 LBS. MAXIMUM
3. MOUNT 6" FROM CEILING

4 WALL MOUNT REMOTE NETWORK EQUIPMENT CABINET MOUNTING DETAIL

NO SCALE

SYSTEM No. WL1001

F RATINGS – 1, 2, 3 AND 4 HR (SEE ITEMS 2 AND 3)
T RATINGS – 0, 1, 2, 3, AND 4 HR (SEE ITEM 3)

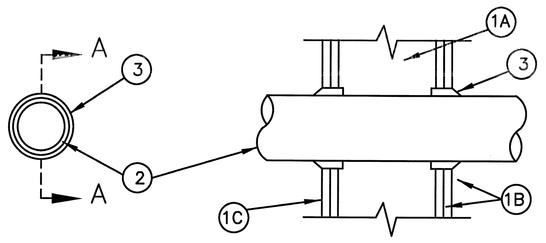

SECTION A–A

Max Pipe or Conduit Dia In.	Annular Space In.	F Rating Hr	T Rating Hr
1	0 to 3/16	1 or 2	0+,1 or 2
1	1/4 to 1/2	3 or 4	3 or 4
4	0 to 1–1/2	1 or 2	0
6	1/4 to 1/2	3 or 4	0
12	3/16 to 3/8	1 or 2	0
+WHEN COPPER PIPE IS USED, T RATING IS 0 H. *BEARING THE UL CLASSIFICATION MARKING			

1. WALL ASSEMBLY– THE 1, 2, 3 OR 4 HR FIRE–RATED GYPSUM WALLBOARD/STUD WALL ASSEMBLY SHALL BE CONSTRUCTED OF THE MATERIALS AND IN THE MANNER DESCRIBED IN THE INDIVIDUAL U300 OR U400 SERIES WALL OR PARTITION DESIGN IN THE UL FIRE RESISTANCE DIRECTORY AND SHALL INCLUDE THE FOLLOWING CONSTRUCTION FEATURES:
   A. STUDS– WALL FRAMING MAY CONSIST OF EITHER WOOD STUDS (MAX 2H FIRE RATED ASSEMBLIES) OR STEEL CHANNEL STUDS. WOOD STUDS TO CONSIST OF NOMINAL 2 BY 4 IN. LUMBER SPACED 16 IN. OC WITH NOM 2 BY 4 IN LUMBER END PLATES AND CROSS BRACES. STEEL STUDS TO BE MINIMUM 3–5/8 IN. WIDE BY 1–3/8 IN DEEP CHANNELS SPACED MAX. 24 IN. OC.
   B. WALLBOARD, GYPSUM*– NOM 1/2 OR 5/8 IN. THICK, 4 FT. WIDE WITH SQUARE OR TAPERED EDGES. THE GYPSUM WALLBOARD TYPE, THICKNESS, NUMBER OF LAYERS, FASTNER TYPE AND SHEET ORIENTATION SHALL BE AS SPECIFIED IN THE INDIVIDUAL U300 OR U400 SERIES DESIGN IN THE UL FIRE RESISTANCE DIRECTORY. MAX DIAM. OF OPENING IS 13–1/2 IN.
2. PIPE OR CONDUIT – NOM 12 IN. DIAM (OR SMALLER) SCHEDULE 10 (OR HEAVIER) STEEL PIPE, NOM 6 IN. DIAMETER (OR SMALLER) STEEL CONDUIT, NOM 4 IN. DIAMETER (OR SMALLER) STEEL ELECTRICAL METALLIC TUBING OR TYPE L (OR HEAVIER) COPPER TUBING OR NOM 1 IN. DIAM (OR SMALLER) FLEXIBLE STEEL CONDUIT. WHEN COPPER PIPES OR FLEXIBLE STEEL CONDUIT IS USED, MAX F RATING OF FIRESTOP SYSTEM (ITEM 3) IS 2 H. STEEL PIPES OR CONDUITS LARGER THAN NOM 4 IN. DIAM MAY ONLY BE USED IN WALLS CONSTRUCTED USING STEEL CHANNEL STUDS. A MAX OF ONE PIPE OR CONDUIT IS PERMITTED IN THE FIRESTOP SYSTEM. PIPE OR CONDUIT TO BE INSTALLED NEAR CENTER OF STUD CAVITY WIDTH AND TO BE RIGIDLY SUPPORTED ON BOTH SIDES OF WALL ASSEMBLY.
3. FILL, VOID OR CAVITY MATERIAL* – CAULK– CAULK FILL MATERIAL TO COMPLETELY FILL ANNULAR SPACE BETWEEN PIPE OR CONDUIT AND GYPSUM WALLBOARD AND WITH A MIN 1/4 IN. DIAM BEAD OF CAULK APPLIED TO PERIMETER OF PIPE OR CONDUIT AT ITS EGRESS FROM THE WALL. CAULK INSTALLED SYMMETRICALLY ON BOTH SIDES OF WALL ASSEMBLY. THE HOURLY F RATING OF THE FIRESTOP SYSTEM IS DEPENDENT UPON THE HOURLY FIRE RATING OF THE WALL ASSEMBLY IN WHICH IT IS INSTALLED, AS SHOWN IN THE FOLLOWING TABLE. THE HOURLY T RATING OF THE FIRESTOP SYSTEM IS DEPENDENT UPON THE TYPE OR SIZE OF PIPE OR CONDUIT AND THE HOURLY FIRE RATING OF THE WALL ASSEMBLY IN WHICH IT IS INSTALLED, AS TABULATED BELOW: F MAX PIPE T

5 THROUGH PENETRATION FIRESTOP SYSTEM

SCALE: NONE

CONSTRUCTION DOCUMENTS

Revisions	Date

REGISTERED PROFESSIONAL ENGINEER — YIN SHING DONG LEE — No. E 017376 — Exp. 9-30-14 — ELECTRICAL — STATE OF CALIFORNIA

ECOM ENGINEERING INC.
1796 TRIBUTE ROAD, SUITE 100
SACRAMENTO, CA. 95815
916.641.5600
916.641.1640 FAX
WWW.ECOMENG.COM
JOB NO. 10E286.00 Pv. MARK
DESIGNERS MARK

JACOBS
Consultants in Architecture, Engineering, Planning, and the Environment
Sacramento Office
180 Promenade Circle, Suite 300
Sacramento, California 95834
(916) 929-3323 Fax (916) 928-1772

Subconsultant List

DREYFUSS & BLACKFORD	3540 FOLSOM BOULEVARD, SACRAMENTO, CA 95816 (916) 453–1234
CAPITAL ENGINEERING CONSULTANTS	11020 SUN CENTER DRIVE, RANCHO CORDOVA, CA 95670 (916) 851–3500
ECOM ENGINEERING INC.	1796 TRIBUTE ROAD, SUITE 100 SACRAMENTO, CA (916) 641–5600
BUEHLER & BUEHLER STRUCTURAL ENGINEERS, INC.	600 Q STREET, STE. 200, SACRAMENTO, CA. 95811 (916) 443–0303
W.L. BURLE ENGINEERS, PA	111 S. WALNUT STREET, GREENVILLE, MS 38702 (662) 332–2619
AQUA ENGINEERING, INC.	4803 INNOVATION DRIVE, FORT COLLINS, CO 80525 (970) 229–9668
THE SIERRA WEST GROUP, LLC	2730 GATEWAY OAKS DRIVE, STE. 110 SACRAMENTO, CA. 95833 (916) 925–4000

NATIONAL CEMETERY ADMINISTRATION

Drawing Title: ELECTRICAL DETAILS

Approved: Director, Office of Construction Management

Approved: Director, Project Management Service

Project Title: LOUISIANA NATIONAL CEMETERY GRAVESITE EXPANSION PHASE 1B

Building Number | Checked | Drawn

Location: LOUISIANA NATIONAL CEMETERY ZACHARY, LOUISIANA

Date: OCTOBER 24, 2012

Project No. 870CM3023B

DRAWING NO. E-7

Dwg. 142 of 150

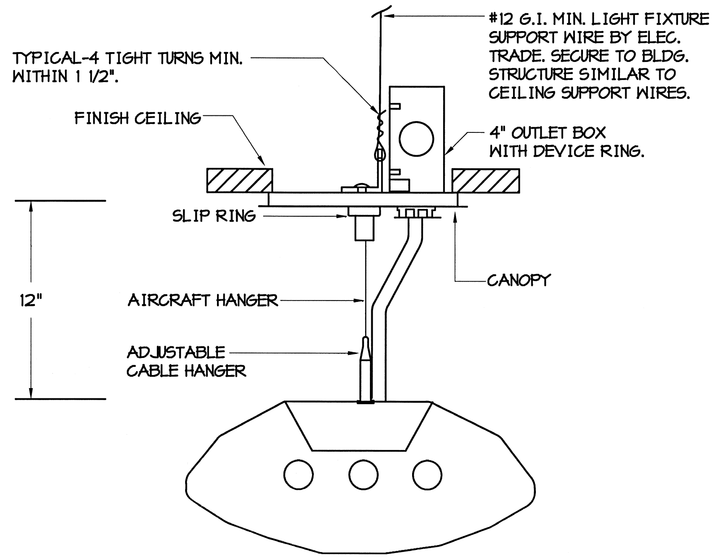

1 TYPICAL - SUSPENDED LIGHT FIXTURE MOUNTING DETAIL

NO SCALE

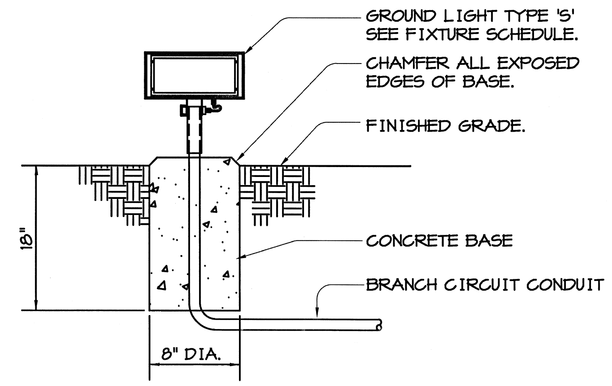

2 GROUND LIGHT FIXTURE MOUNTING DETAIL

NO SCALE

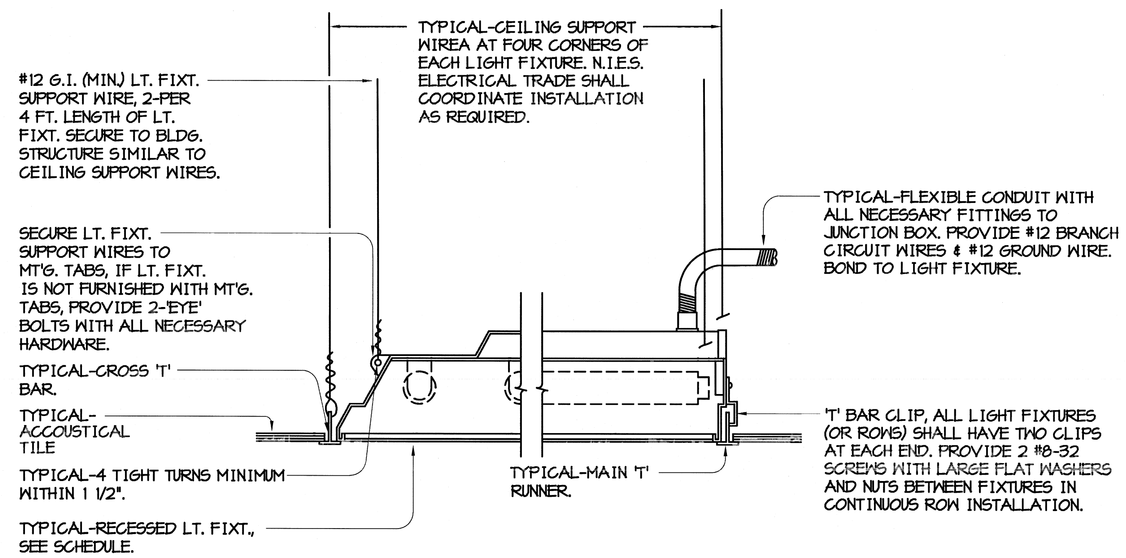

3 TYPICAL - RECESSED T' BAR LT. FIXT. MT'G DETAIL

NO SCALE

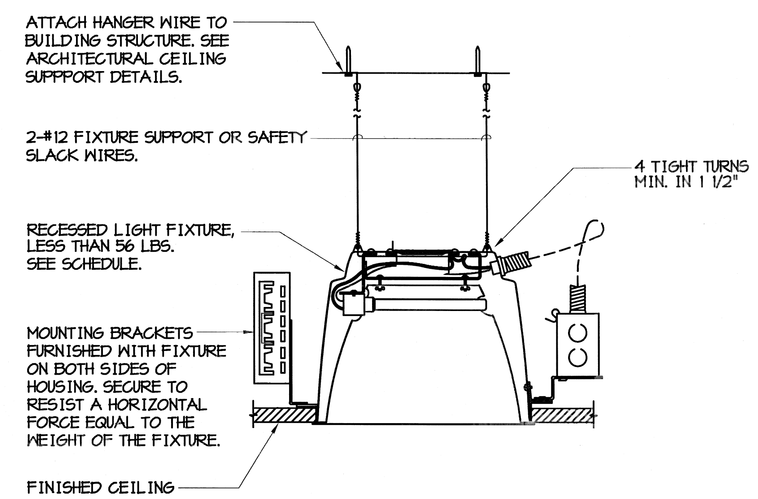

4 RECESSED DOWNLIGHT FIXTURE MOUNTING DETAIL

NO SCALE

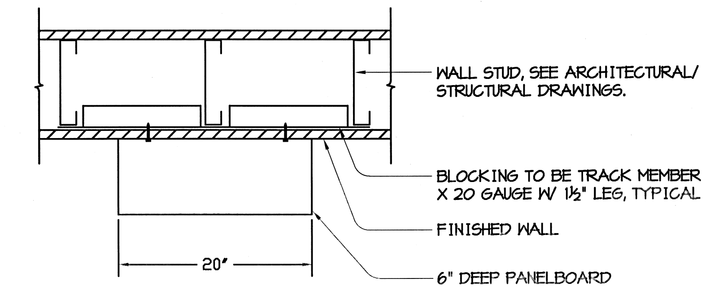

TOP VIEW

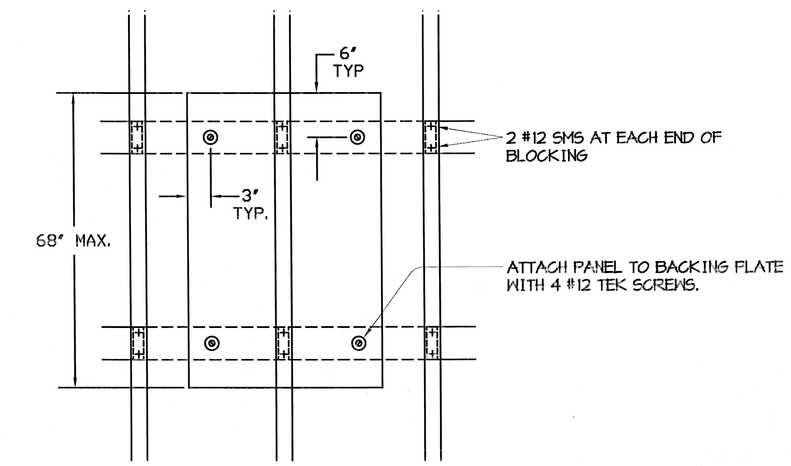

FRONT VIEW

NOTES:

1. USE FENDER WASHERS ON ALL SCREWS.
2. WEIGHT- 150 LBS. MAXIMUM
3. ALL SCREWS #12 SELF-TAPPING SHEET METAL SCREWS-TRAXX BY ITW BUILDEX OR APPROVED EQUIVALENT. MIN O.C. SPACING OF SCREWS IS 1" TYPICAL, UNLESS NOTED. MIN EDGE DISTANCE - ℄ SCREW TO MEMBER EDGE IS ½" TYP. UON.

5 SURFACE MOUNTED PANEL DETAIL

NO SCALE

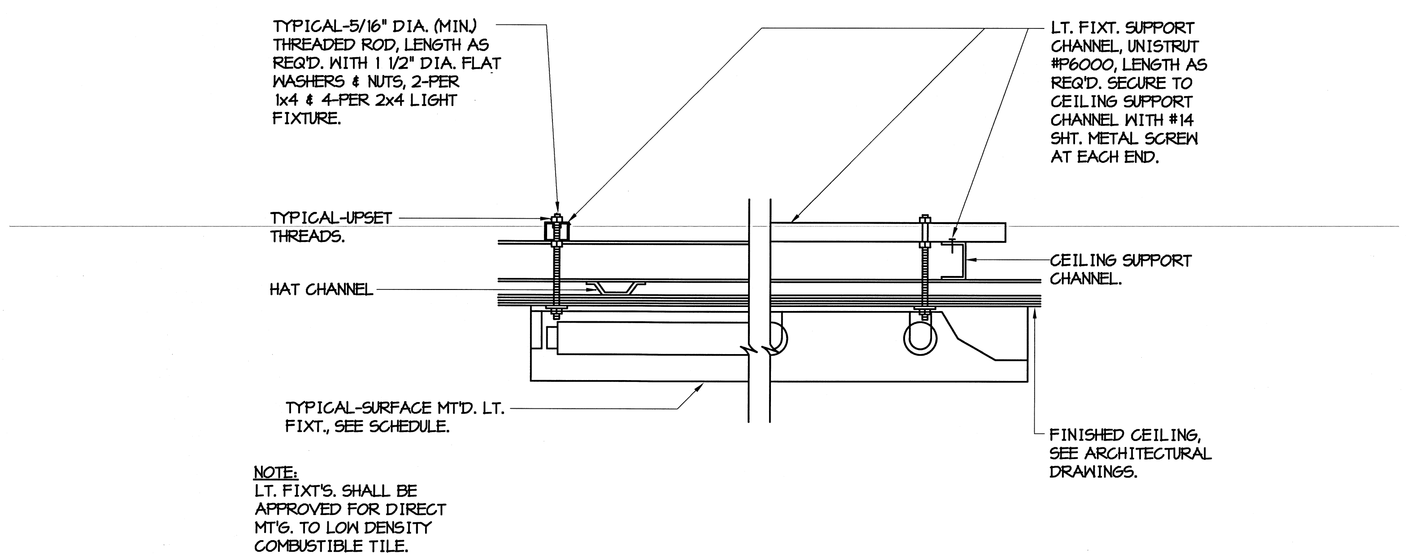

NOTE:
LT. FIXT'S. SHALL BE APPROVED FOR DIRECT MT'G. TO LOW DENSITY COMBUSTIBLE TILE.

6 TYPICAL - SURFACE MOUNTED LIGHT FIXTURE DETAIL

NO SCALE

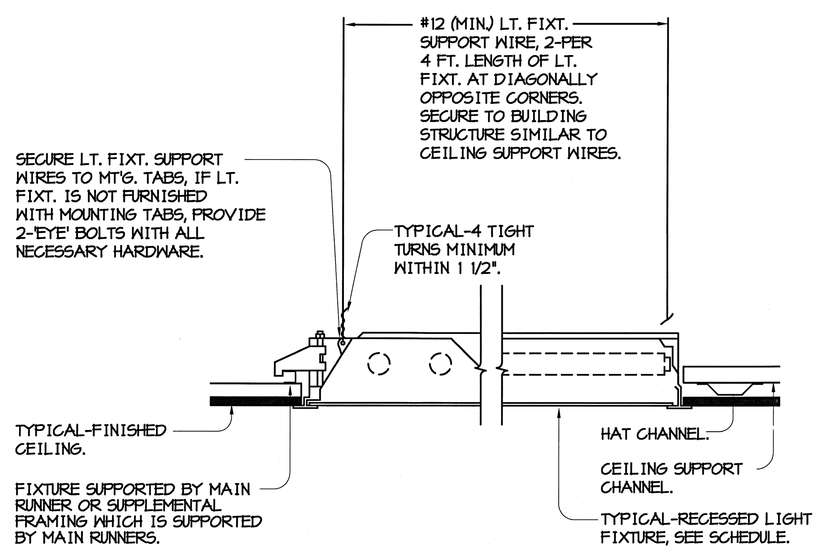

7 TYPICAL- RECESSED LIGHT FIXTURE MOUNTING DETAIL

NO SCALE

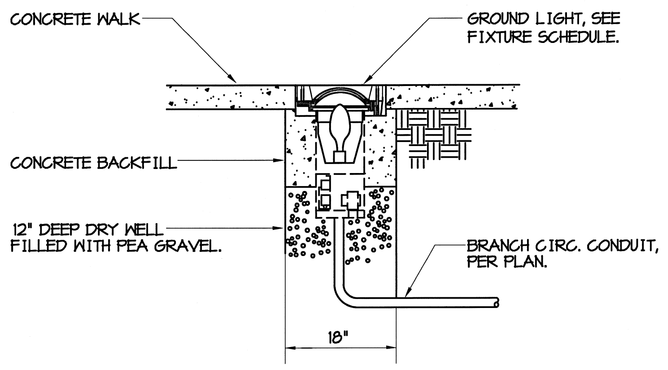

8 RECESSED GROUND LIGHT FIXTURE MOUNTING DETAIL

NO SCALE

CONSTRUCTION DOCUMENTS

Revisions	Date

REGISTERED PROFESSIONAL ENGINEER — YIP SHING DONAY LEE — No. E 011318 — Exp. 9-30-14 — ELECTRICAL — STATE OF CALIFORNIA

ECOM ENGINEERING INC.
1795 Tribute Road, Suite 100
Sacramento, CA. 95815
916.641.5600
916.641.1640 FAX
www.ecomeng.com
JOB NO. 10E286.00 PM MARK
DESIGNER MARK

JACOBS
Consultants in Architecture, Engineering, Planning, and the Environment
Sacramento Office
180 Promenade Circle, Suite 300
Sacramento, California 95834
(916) 929-3323 Fax (916) 929-1772

Subconsultant List

DREYFUSS & BLACKFORD	3540 FOLSOM BOULEVARD, SACRAMENTO, CA 95816	(916) 453-1234
CAPITAL ENGINEERING CONSULTANTS	11020 SUN CENTER DRIVE, RANCHO CORDOVA, CA 95670	(916) 851-3500
ECOM ENGINEERING INC.	1796 TRIBUTE ROAD, SUITE 100 SACRAMENTO, CA	(916) 641-5600
BUEHLER & BUEHLER STRUCTURAL ENGINEERS, INC.	600 Q STREET, STE. 200, SACRAMENTO, CA. 95811	(916) 443-0303
W.L. BURLE ENGINEERS, PA	111 S. WALNUT STREET, GREENVILLE, MS 38702	(662) 332-2619
AQUA ENGINEERING, INC.	4803 INNOVATION DRIVE, FORT COLLINS, CO 80525	(970) 229-9668
THE SIERRA WEST GROUP, LLC	2730 GATEWAY OAKS DRIVE, STE. 110 SACRAMENTO, CA. 95833	(916) 925-4000

NATIONAL CEMETERY ADMINISTRATION

Drawing Title: ELECTRICAL DETAILS	Project Title: LOUISIANA NATIONAL CEMETERY GRAVESITE EXPANSION PHASE 1B		Date: OCTOBER 24, 2012
Approved: Director, Office of Construction Management	Building Number	Checked / Drawn	Project No. 870CM3023B
Approved: Director, Project Management Service	Location: LOUISIANA NATIONAL CEMETERY ZACHARY, LOUISIANA		DRAWING NO. E-6
			Dwg. 141 of 150

PANEL - 'A' (NEW) — ADD-ALT. #8

PROJECT: PORT HUDSON NATIONAL CEMETERY
LOCATION: ELECTRICAL CLOSET 112 — SECTION 1

	LOAD DESCRIPTION	CONT.	RECP.	MOTOR	NON.	C.B. TRIP	C.B. POLE	CKT #	PH A	PH B	CKT #	C.B. TRIP	C.B. POLE	CONT.	RECP.	MOTOR	NON.	LOAD DESCRIPTION	
1	RECEPTACLES		0.90			20	1	1	*		2	20	1	1.34			0.20	EXT./BREEZWAY LTG., LCP	2
3	RECEPTACLES		0.54			20	1	3		*	4	20	1	0.57				LIGHTING	4
5	RECEPTACLES		0.90			20	1	5	*		6	20	1	0.54				LIGHTING	6
7	RECEPTACLES		0.72			20	1	7		*	8	20	1		0.36			RECEPTACLES	8
9	RECEPTACLES		0.54			20	1	9	*		10	20	1		0.36			RECEPTACLES	10
11	WATER COOLER				1.00	20	1	11		*	12	20	1				0.40	SEPTIC PUMP CONTROLLER	12
13	GARBAGE DISPOSAL				0.70	20	1	13	*		14	20	1			1.20		SEPTIC PUMP	14
15	MICROWAVE				1.00	20	1	15		*	16						0.20	INTRUSION ALARM PANEL	16
17	RECEPTACLES		0.90			20	1	17	*		18				0.36			RECEPTACLES	18
19	RECEPTACLES		0.90			20	1	19		*	20	20	1			0.72		DOOR OPERATOR	20
21	WIREMOLD		1.44			20	1	21	*		22	20	1			0.36		DOOR OPERATOR	22
23	WIREMOLD		1.26			20	1	23		*	24	20	1				0.20	FIRE ALARM (2)	24
25	GRAVE LOCATOR	0.36				20	1	25	*		26	20	1					SPARE	26
27	COPIER				1.00	20	1	27		*	28	20	1					SPARE	28
29	DRINKING FOUNTAIN (1)				0.30	20	1	29	*		30	20	1					SPARE	30
31	VENDING MACHINE				1.20	20	1	31		*	32							SPACE	32
33	VENDING MACHINE				1.20	20	1	33	*		34							SPACE	34
35	REFRIGERATOR	0.30				20	1	35		*	36							SPACE	36
37	RECEPTACLES		0.72			20	1	37	*		38							SPACE	38
39	FIRE SUPRESSION SYSTEM				0.20	20	1	39		*	40							SPACE	40
41	SPARE					20	1	41	*		42							SPACE	42
	TOTALS ---------->	0.66	8.82	0.00	6.60									2.45	1.08	2.28	1.00	<-------- TOTALS	

VOLTAGE: 120/240V, 1 PH, 3W
AIC: 10,000 AIC
MOUNTING: SURFACE
BUSSING: 225 AMP BUSING
MAIN: MAIN LUGS ONLY

LOAD SUMMATION

CONNECT LOAD (KVA)		DEMAND FACTOR	DEMAND LOAD (KVA)	
3.11	x	125% OF LOAD	= 3.89	<-- CONTINUOUS
9.90	x	CEC DEMAND	= 9.90	<-- RECEPTACLES
2.28	x	1.00	= 3.48	<-- MOTORS+25% LARGEST
7.60	x	1.00	= 7.60	<-- NONCONTINUOUS
22.89	KVA	95.38 Amps	24.87 KVA	103.61 Amps

ADDITIONAL FEATURES:
SERVICE RATED

BREAKER NOTES:
(1) = C/B WITH GFCI PROTECTION
(2) = PROVIDE LOCKING TAB

CEC DEMAND: 1st 10 kVA AT 100%, REMAINING AT 50%.
LARGEST MOTOR LOAD (kVA) = 1.20

ecom1.xls 11/28/11 10/24/12

PANEL - 'A' (NEW) — ADD-ALT. #8

PROJECT: PORT HUDSON NATIONAL CEMETERY
LOCATION: ELECTRICAL CLOSET 112 — SECTION 2

	LOAD DESCRIPTION	CONT.	RECP.	MOTOR	NON.	C.B. TRIP	C.B. POLE	CKT #	PH A	PH B	CKT #	C.B. TRIP	C.B. POLE	CONT.	RECP.	MOTOR	NON.	LOAD DESCRIPTION	
43	HP-1			0.36		15	2	43	*		44	30	2			2.40		CU-1	44
---				0.36			---			*			---			2.40			---
47	HP-2			0.36		15	2	47	*		48	25	2			1.80		CU-2	48
---				0.36			---			*			---			1.80			---
51	HP-3			0.36		15	2	51	*		52	30	2			2.40		CU-3	52
---				0.36			---			*			---			2.40			---
55	EWH-1			2.50		30	2	55	*		56	15	2			1.08		SCU-1	56
---				2.50			---			*			---			1.08			---
59	CP-1			0.12		15	1	59	*		60	15	2			0.14		SAC-1	60
61	EF-1			0.70		15	1	61		*			---			0.14			---
63	EF-2			0.70		15	1	63	*		64	20						SPARE	64
65	SPACE							65		*	66	20	1					SPARE	66
67	SPACE							67	*		68	20	1					SPARE	68
69	SPACE							69		*	70	20	1					SPARE	70
71	SPACE							71	*		72	20	1					SPARE	72
73	SPACE							73		*	74	20	1					SPARE	74
75	SPACE							75	*		76	20	1					SPARE	76
77	SPACE							77		*	78	20	1					SPARE	78
79	SPACE							79	*		80	20	1					SPARE	80
81	SPACE							81		*	82	60	2	0.41	0.54	0.00	0.00	POWER PEDESTALS	82
83	SPACE							83	*				---	0.00	0.00	0.00	0.00		---
	TOTALS ---------->	0.00	0.00	8.68	0.00									0.41	0.54	15.64	0.00	<-------- TOTALS	

VOLTAGE: 120/240V, 1 PH, 3W
AIC: 10,000 AIC RMS SYM.
MOUNTING: SURFACE
BUSSING: 225 AMP BUSING
MAIN: MAIN LUGS ONLY

LOAD SUMMATION (THESE VALUES INCLUDE LOADS FROM SECTION 1)

CONNECT LOAD (KVA)		DEMAND FACTOR	DEMAND LOAD (KVA)	
0.41	x	125% OF LOAD	= 0.51	<-- CONTINUOUS
0.54	x	CEC DEMAND	= 0.54	<-- RECEPTACLES
24.32	x	1.00	= 29.32	<-- MOTORS+25% LARGEST
0.00	x	1.00	= 0.00	<-- NONCONTINUOUS
25.27	KVA	105.28 Amps	30.37 KVA	126.53 Amps

ADDITIONAL FEATURES:
FEED THRU LUGS
SERVICE RATED

CEC DEMAND: 1st 10 kVA AT 100%, REMAINING AT 50%.
LARGEST MOTOR LOAD (kVA) = 5.00

ecom1.xls 04/18/08 10/24/12

PANEL - 'PP-1' (NEW) — BASE BID

PROJECT: PORT HUDSON NATIONAL CEMETERY
LOCATION: ENTRY

	LOAD DESCRIPTION	CONT.	RECP.	MOTOR	NON.	C.B. TRIP	C.B. POLE	CKT #	PH A	PH B	CKT #	C.B. TRIP	C.B. POLE	CONT.	RECP.	MOTOR	NON.	LOAD DESCRIPTION	
1	ENTRY SIGN (1)	0.09				20	1	1	*		2	20	1		0.18			RECEPTACLE	2
3	SPARE					20	1	3		*	4	20	1					SPARE	4
5	SPACE							5	*		6							SPACE	6
7	SPACE							7		*	8							SPACE	8
9	SPACE							9	*		10							SPACE	10
11	SPACE							11		*	12							SPACE	12
	TOTALS ---------->	0.09	0.00	0.00	0.00									0.00	0.18	0.00	0.00	<-------- TOTALS	

VOLTAGE: 120/240V, 1 PH, 3W
AIC: 10,000 AIC
MOUNTING: SURFACE
BUSSING: 60 AMP BUSING
MAIN: 30 AMP MAIN BRKR.

LOAD SUMMATION

CONNECT LOAD (KVA)		DEMAND FACTOR	DEMAND LOAD (KVA)	
0.09	x	125% OF LOAD	= 0.11	<-- CONTINUOUS
0.18	x	CEC DEMAND	= 0.18	<-- RECEPTACLES
0.00	x	1.00	= 0.00	<-- MOTORS+25% LARGEST
0.00	x	1.00	= 0.00	<-- NONCONTINUOUS
0.27	KVA	1.12 Amps	0.29 KVA	1.21 Amps

ADDITIONAL FEATURES:
PROVIDE LTG CONTACTOR W/ INTERN. PHOTOCELL-ON/OFF

BREAKER NOTES:
(1) = VIA LIGHTING CONTACTOR FOR PHOTOCELL CONTROL

CEC DEMAND: 1st 10 kVA AT 100%, REMAINING AT 50%.

ecom1.xls 11/28/11 03/09/12

PANEL - 'PEDESTAL A' (NEW) — BASE BID

PROJECT: PORT HUDSON NATIONAL CEMETERY
LOCATION: ELECTRICAL CLOSET 112 — SECTION 1

	LOAD DESCRIPTION	CONT.	RECP.	MOTOR	NON.	C.B. TRIP	C.B. POLE	CKT #	PH A	PH B	CKT #	C.B. TRIP	C.B. POLE	CONT.	RECP.	MOTOR	NON.	LOAD DESCRIPTION	
1	SPACE					200	2	1	*		2	20	1					SPARE	2
---							---			*	4	20	1					SPARE	4
5	SPARE					100	2	5	*		6	20	1					SPARE	6
---							---			*	8	20	1					SPARE	8
9	SPARE					100	2	9	*		10	20	1					SPARE	10
---							---			*	12								12
13	SPARE					50	2	13	*		14								14
---							---			*	16	60	2	0.41	0.54	0.00		POWER PEDESTAL	16
17								17	*				---	0.00	0.00	0.00			---
	TOTALS ---------->	0.00	0.00	0.00	0.00									0.41	0.54	0.00	0.00	<-------- TOTALS	

VOLTAGE: 120/240V, 1 PH, 3W
AIC: 10,000 AIC
MOUNTING: SURFACE
BUSSING: 200 AMP BUSING
MAIN: 200 AMP MAIN BRKR.

LOAD SUMMATION

CONNECT LOAD (KVA)		DEMAND FACTOR	DEMAND LOAD (KVA)	
0.41	x	125% OF LOAD	= 0.51	<-- CONTINUOUS
0.54	x	CEC DEMAND	= 0.54	<-- RECEPTACLES
0.00	x	1.00	= 0.00	<-- MOTORS+25% LARGEST
0.00	x	1.00	= 0.00	<-- NONCONTINUOUS
0.95	KVA	3.94 Amps	1.05 KVA	4.36 Amps

ADDITIONAL FEATURES:

BREAKER NOTES:
(1) = C/B WITH GFCI PROTECTION
(2) = PROVIDE LOCKING TAB

CEC DEMAND: 1st 10 kVA AT 100%, REMAINING AT 50%.

ecom1.xls 11/28/11 10/19/12

PANEL - 'B1' (NEW) — BASE BID

PROJECT: PORT HUDSON NATIONAL CEMETERY
LOCATION: MAINTANANCE BUILDING — SECTION 1

	LOAD DESCRIPTION	CONT.	RECP.	MOTOR	NON	C.B. TRIP	C.B. POLE	CKT #	PH A	PH B	PH C	CKT #	C.B. TRIP	C.B. POLE	CONT.	RECP.	MOTOR	NON	LOAD DESCRIPTION	
1	FACP				0.20	20	1	1	*			2	20	1		1.08			RECEPTACLES	2
3	RECEPTACLE		0.36			20	1	3		*		4	20	1		1.08			RECEPTACLES	4
5	WIREMOLD		1.62			20	1	5			*	6	20	1		0.90			RECEPTACLES	6
7	WIREMOLD		1.62			20	1	7	*			8	20	1		0.54			RECEPTACLES	8
9	WELDER				3.60	50	2	9		*		10	20	1		0.54			RECEPTACLES	10
---					3.60		---				*	12	20	1				1.00	WATER COOLER	12
13	SEPTIC PUMP CONTROLLER				0.40	20	1	13	*			14	20	1		0.18			REFRIG./RECEPT.	14
15	SEPTIC PUMP			1.20		20	1	15		*		16	20	1				1.00	MICROWAVE	16
17	INTRUSION ALARM PANEL				0.20	20	1	17			*	18	20	1				0.70	GARBAGE DISPOSAL	18
19	RECEPTACLE		0.36			20	1	19	*			20	20	1	1.17				MAINT. BAY LIGHTING	20
21	SPARE					20	1	21		*		22	20	1	0.51				STORAGE LIGHTING	22
23	SPARE					20	1	23			*	24	20	1	0.59				LIGHTING	24
25	SPARE					20	1	25	*			26	20	1	0.49			0.20	EXTERIOR LIGHTING/LCP	26
27	SPARE					20	1	27		*		28	20	1					SPARE	28
29	SPARE					20	1	29			*	30	20	1					SPARE	30
	TOTALS ---------->	0.00	3.96	1.20	8.00										2.76	4.32	0.00	2.90	<-------- TOTALS	

VOLTAGE: 120/208V, 3 PH, 4W
AIC: 10,000
MOUNTING: SURFACE
BUSING: 200 AMP BUSING
MAIN: 200 AMP MAIN BRKR.

LOAD SUMMATION

CONNECT LOAD (KVA)		DEMAND FACTOR	DEMAND LOAD (KVA)	
2.76	x	125% OF LOAD	= 3.45	<-- CONTINUOUS
8.28	x	CEC DEMAND	= 8.28	<-- RECEPTACLES
1.20	x	1.00	= 2.97	<-- MOTORS+25% LARGEST
10.90	x	1.00	= 10.90	<-- NONCONTINUOUS
23.14	kVA	64.29 Amps	25.60 kVA	71.12 Amps

ADDITIONAL FEATURES:
FEED THRU LUGS
SERVICE RATED
NEMA 3R ENCLOSURE

CEC 220.44 DEMAND: 1st 10 kVA AT 100%, REMAINING AT 50%.
MOTOR SIZE IS TOO BIG (KVA)!!! 7.08

ecom3.xls 12/01/11 10/24/12

PANEL - 'B1' (NEW) — BASE BID

PROJECT: PORT HUDSON NATIONAL CEMETERY
LOCATION: MAINTANANCE BUILDING — SECTION 2

	LOAD DESCRIPTION	CONT.	RECP.	MOTOR	NON	C.B. TRIP	C.B. POLE	CKT #	PH A	PH B	PH C	CKT #	C.B. TRIP	C.B. POLE	CONT.	RECP.	MOTOR	NON	LOAD DESCRIPTION	
31	GARAGE DOOR OPENER				1.10	20	1	31	*			32	20	1					SPARE	32
33	GARAGE DOOR OPENER				1.10	20	1	33		*		34	20	1					SPARE	34
35	EUH-1			1.30		20	2	35			*	36	20	1			0.06		CP-2	36
---				1.30			---		*			38	60	2			3.54		CU-4	38
39	EUH-2			1.30		20	2	39		*				---			3.54			---
---				1.30			---				*							3.00		---
43	EUH-3			1.30		20	2	43	*			44	40	3				3.00	EWH-2	44
---				1.30			---			*				---				3.00		---
47	EUH-4			1.30		20	2	47			*	48							SPACE	48
---				1.30			---		*			50							SPACE	50
51	EF-3			0.70		15	1	51		*		52							SPACE	52
53	EF-4			0.70		15	1	53			*	54							SPACE	54
55	HP-4			0.99		20	2	55	*			56							SPACE	56
---				0.99			---			*		58							SPACE	58
59	SPARE					20	1	59			*	60							SPACE	60
	TOTALS ---------->	0.00	0.00	13.78	2.20										0.00	0.00	7.14	9.00	<-------- TOTALS	

VOLTAGE: 120/208V, 3 PH, 4W
AIC: 10,000
MOUNTING: SURFACE
BUSING: 200 AMP BUSING
MAIN: 200 AMP MAIN BRKR.

LOAD SUMMATION (THESE VALUES INCLUDE LOADS FROM SECTION 1)

CONNECT LOAD (KVA)		DEMAND FACTOR	DEMAND LOAD (KVA)	
2.76	x	125% OF LOAD	= 3.45	<-- CONTINUOUS
8.28	x	CEC DEMAND	= 8.28	<-- RECEPTACLES
22.12	x	1.00	= 22.42	<-- MOTORS+25% LARGEST
22.10	x	1.00	= 22.10	<-- NONCONTINUOUS
55.26	kVA	153.51 Amps	56.25 kVA	156.26 Amps

ADDITIONAL FEATURES:
SERVICE RATED
NEMA 3R ENCLOSURE

CEC 220.44 DEMAND: 1st 10 kVA AT 100%, REMAINING AT 50%.
LARGEST MOTOR LOAD (kVA) = 1.20

ecom3.xls 12/01/11 10/24/12

SERVICE PEDESTAL 'B' (EXISTING)

PROJECT: PORT HUDSON NATIONAL CEMETERY
LOCATION: MAINTENANCE BLDG (EXT)

	LOAD DESCRIPTION	CONT.	RECP.	MOTOR	NON	C.B. TRIP	C.B. POLE	CKT #	PH A	PH B	PH C	CKT #	C.B. TRIP	C.B. POLE	CONT.	RECP.	MOTOR	NON	LOAD DESCRIPTION	
---		1.66	3.42	8.43	4.70		---		*					---						---
3	PANEL 'B1' (2)	0.51	1.98	9.03	8.70	200	3	3		*		4	400	3					MAIN C/B (1)	4
---		0.59	2.52	4.66	8.50		---				*			---						---
7	SPARE					20	1	7	*					---			2.90			---
9	IRRIGATION CONTROLLER (1)				0.30	20	1	9		*		10	45	3			2.90		BOOSTER PUMP (1)	10
11	FUEL PUMP (1)			0.83		15	1	11			*			---			2.90			---
13								13	*			14								14
15								15		*		16								16
17								17			*	18								18
	TOTALS ---------->	2.76	7.92	22.95	22.20										0.00	0.00	8.70	0.00	<-------- TOTALS	

VOLTAGE: 120/208V, 3 PH, 4W
AIC: 22,000
MOUNTING: SURFACE
BUSING: 400 AMP BUSING
MAIN: 400 AMP MAIN BRKR.

LOAD SUMMATION

CONNECT LOAD (KVA)		DEMAND FACTOR	DEMAND LOAD (KVA)	
2.76	x	125% OF LOAD	= 3.45	<-- CONTINUOUS
7.92	x	CEC DEMAND	= 7.92	<-- RECEPTACLES
31.65	x	1.00	= 33.83	<-- MOTORS+25% LARGEST
22.20	x	1.00	= 22.20	<-- NONCONTINUOUS
64.53	kVA	179.26 Amps	67.40 kVA	187.22 Amps

ADDITIONAL FEATURES:

BREAKER NOTES:
(1) = EXISTING C/B, EXISTING LOAD.
(2) = EXISTING C/B, NEW LOAD.

CEC 220.44 DEMAND: 1st 10 kVA AT 100%, REMAINING AT 50%.
LARGEST MOTOR LOAD (kVA) = 8.70

ecom3.xls 12/01/11 1/26/12

PANEL - 'PP-2' (NEW) — ADD-ALT. #4

PROJECT: PORT HUDSON NATIONAL CEMETERY
LOCATION: P.O.W. FLAG AREA

	LOAD DESCRIPTION	CONT.	RECP.	MOTOR	NON.	C.B. TRIP	C.B. POLE	CKT #	PH A	PH B	CKT #	C.B. TRIP	C.B. POLE	CONT.	RECP.	MOTOR	NON.	LOAD DESCRIPTION	
1	FLAG POLE LTG (1)	0.06				20	1	1	*		2	20	1		0.18			RECEPTACLE	2
3	SPARE					20	1	3		*	4	20	1					SPARE	4
5	SPACE							5	*		6							SPACE	6
7	SPACE							7		*	8							SPACE	8
9	SPACE							9	*		10							SPACE	10
11	SPACE							11		*	12							SPACE	12
	TOTALS ---------->	0.06	0.00	0.00	0.00									0.00	0.18	0.00	0.00	<-------- TOTALS	

VOLTAGE: 120/240V, 1 PH, 3W
AIC: 10,000 AIC
MOUNTING: SURFACE
BUSSING: 60 AMP BUSING
MAIN: 30 AMP MAIN BRKR.

LOAD SUMMATION

CONNECT LOAD (KVA)		DEMAND FACTOR	DEMAND LOAD (KVA)	
0.06	x	125% OF LOAD	= 0.07	<-- CONTINUOUS
0.18	x	CEC DEMAND	= 0.18	<-- RECEPTACLES
0.00	x	1.00	= 0.00	<-- MOTORS+25% LARGEST
0.00	x	1.00	= 0.00	<-- NONCONTINUOUS
0.24	KVA	0.99 Amps	0.25 KVA	1.05 Amps

ADDITIONAL FEATURES:
PROVIDE LTG CONTACTOR W/ INTERN. PHOTOCELL-ON/OFF

BREAKER NOTES:
(1) = VIA LIGHTING CONTACTOR FOR PHOTOCELL CONTROL

CEC DEMAND: 1st 10 kVA AT 100%, REMAINING AT 50%.

ecom1.xls 11/28/11 03/09/12

PANEL - 'PP-3' (NEW) — ADD-ALT. #2

PROJECT: PORT HUDSON NATIONAL CEMETERY
LOCATION: FLAG ASSEMBLY AREA

	LOAD DESCRIPTION	CONT.	RECP.	MOTOR	NON.	C.B. TRIP	C.B. POLE	CKT #	PH A	PH B	CKT #	C.B. TRIP	C.B. POLE	CONT.	RECP.	MOTOR	NON.	LOAD DESCRIPTION	
1	FLAG POLE LTG. (1)	0.26				20	1	1	*		2	20	1		0.18			RECEPTACLE	2
3	SPARE					20	1	3		*	4	20	1					SPARE	4
5	SPACE							5	*		6							SPACE	6
7	SPACE							7		*	8							SPACE	8
9	SPACE							9	*		10							SPACE	10
11	SPACE							11		*	12							SPACE	12
	TOTALS ---------->	0.26	0.00	0.00	0.00									0.00	0.18	0.00	0.00	<-------- TOTALS	

VOLTAGE: 120/240V, 1 PH, 3W
AIC: 10,000 AIC
MOUNTING: SURFACE
BUSSING: 60 AMP BUSING
MAIN: 30 AMP MAIN BRKR.

LOAD SUMMATION

CONNECT LOAD (KVA)		DEMAND FACTOR	DEMAND LOAD (KVA)	
0.26	x	125% OF LOAD	= 0.33	<-- CONTINUOUS
0.18	x	CEC DEMAND	= 0.18	<-- RECEPTACLES
0.00	x	1.00	= 0.00	<-- MOTORS+25% LARGEST
0.00	x	1.00	= 0.00	<-- NONCONTINUOUS
0.44	KVA	1.84 Amps	0.51 KVA	2.11 Amps

ADDITIONAL FEATURES:
PROVIDE LTG CONTACTOR W/ INTERN. PHOTOCELL-ON/OFF

BREAKER NOTES:
(1) = VIA LIGHTING CONTACTOR FOR PHOTOCLL CONTROL

CEC DEMAND: 1st 10 kVA AT 100%, REMAINING AT 50%.

ecom1.xls 11/28/11 03/09/12

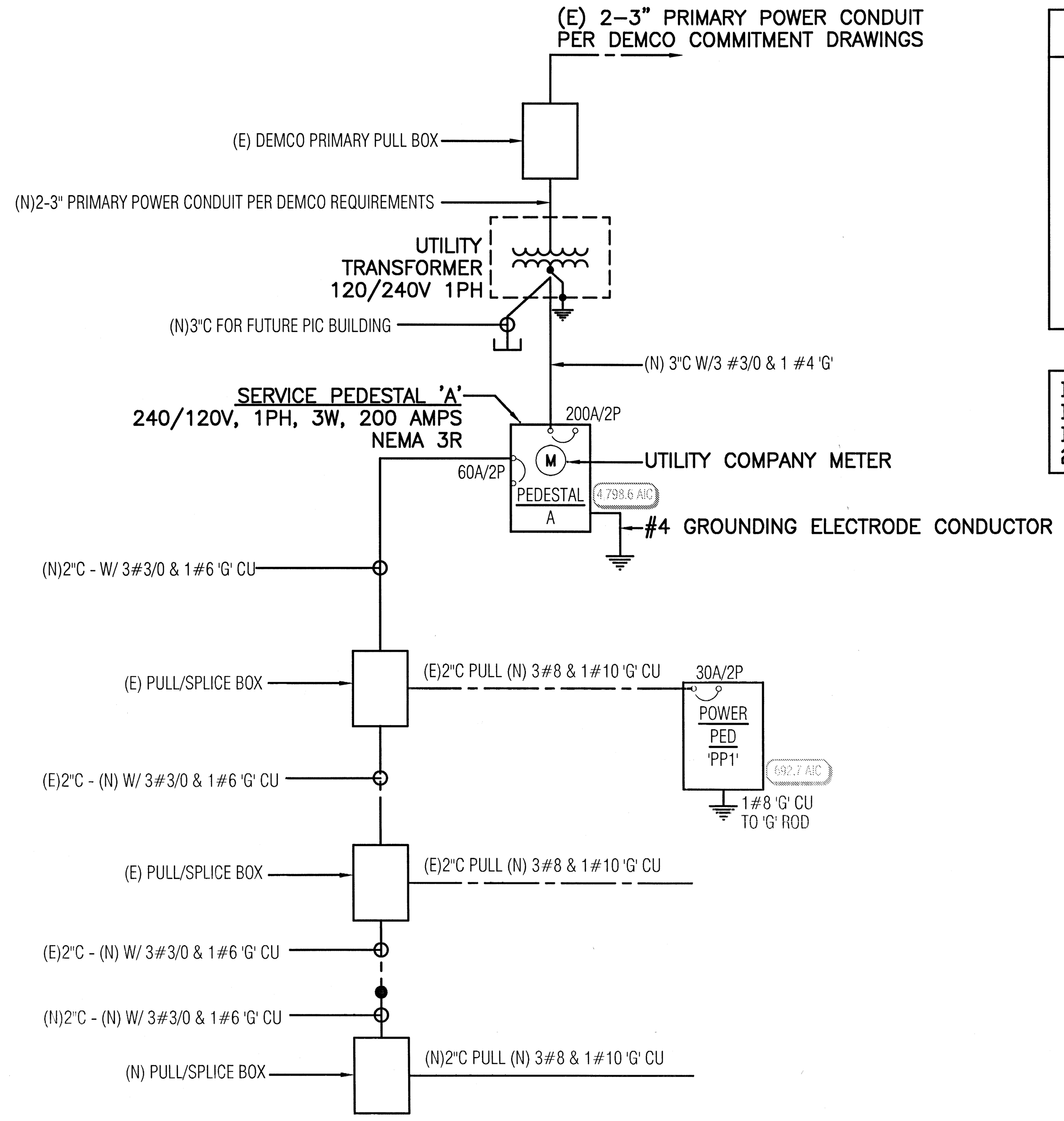

1 ONE LINE DIAGRAM - BASE BID
NO SCALE

ONE-LINE DIAGRAM LEGEND

(symbol)	CIRCUIT BREAKER
(symbol)	GROUNDING ELECTRODE
AIC	AVAILABLE INTERRUPTING CURRENT
XXXX	FEEDER TAG

DEMCO ELECTRIC
DISTRICT ELEC. ENGINEER
DAVID JEWELL
225-654-5624

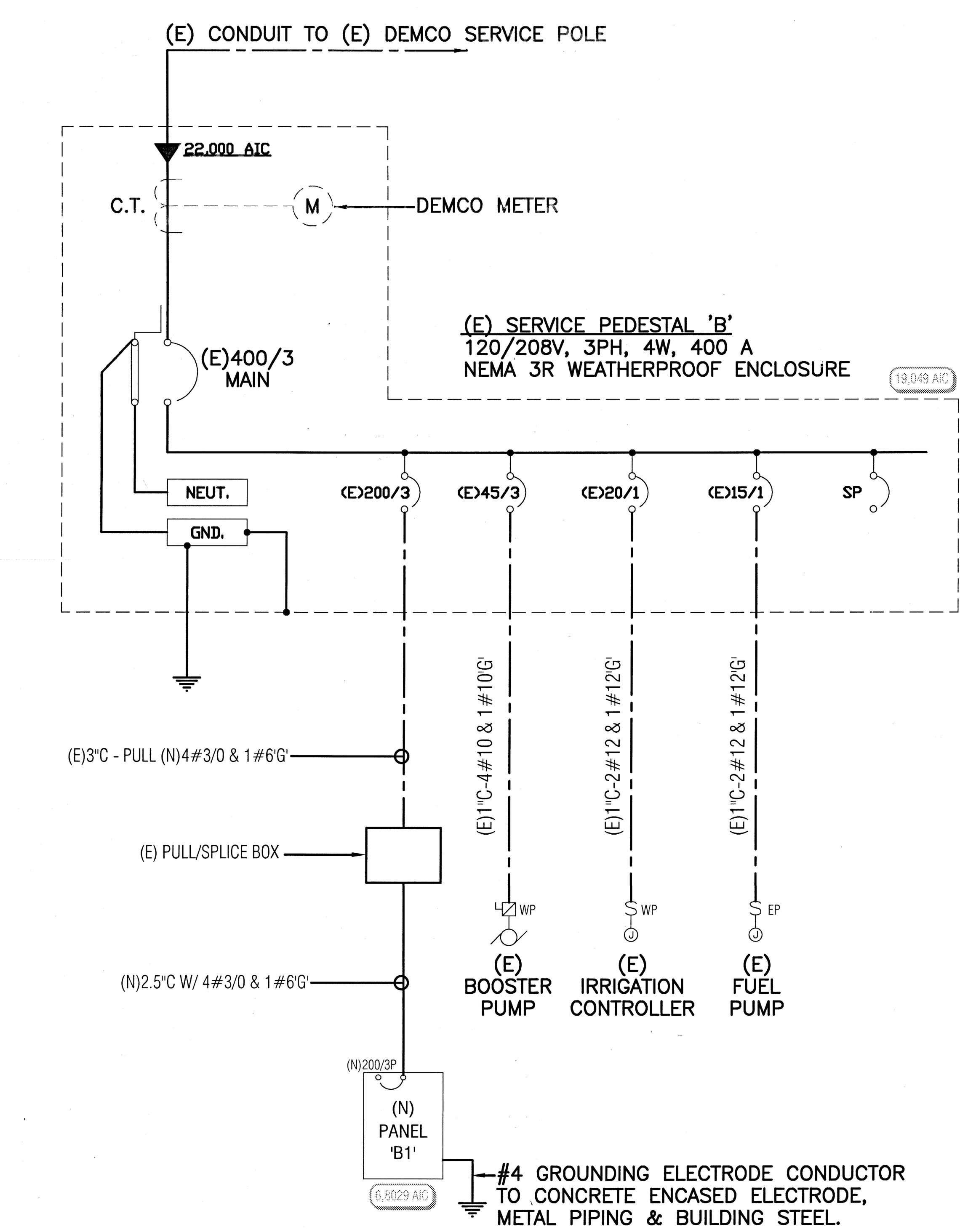

2 ONE LINE DIAGRAM-MAINTENANCE BUILDING - BASE BID
NO SCALE

CONSTRUCTION DOCUMENTS

Revisions | Date

REGISTERED PROFESSIONAL ENGINEER — YIP SHING DONNY LEE — No. E 017376 — Exp. 9-30-14 — ELECTRICAL — STATE OF CALIFORNIA

ECOM ENGINEERING INC.
1796 TRIBUTE ROAD, SUITE 100
SACRAMENTO, CA. 95815
916.641.5600
916.641.1640 FAX
WWW.ECOMENG.COM
JOB NO. 10E286.00 PM. MARK
DESIGNERS MARK

JACOBS
Consultants in Architecture, Engineering, Planning, and the Environment
Sacramento Office
180 Promenade Circle, Suite 300
Sacramento, California 95834
(916) 929-3323 Fax (916) 929-1772

Subconsultant List

DREYFUSS & BLACKFORD	3540 FOLSOM BOULEVARD, SACRAMENTO, CA 95816 (916) 453-1234
CAPITAL ENGINEERING CONSULTANTS	11020 SUN CENTER DRIVE, RANCHO CORDOVA, CA 95670 (916) 851-3500
ECOM ENGINEERING INC.	1796 TRIBUTE ROAD, SUITE 100 SACRAMENTO, CA (916) 641-5600
BUEHLER & BUEHLER STRUCTURAL ENGINEERS, INC.	600 Q STREET, STE. 200, SACRAMENTO, CA. 95811 (916) 443-0303
W.L. BURLE ENGINEERS, PA	111 S. WALNUT STREET, GREENVILLE, MS 38702 (662) 332-2619
AQUA ENGINEERING, INC.	4803 INNOVATION DRIVE, FORT COLLINS, CO 80525 (970) 229-9668
THE SIERRA WEST GROUP, LLC	2730 GATEWAY OAKS DRIVE, STE. 110 SACRAMENTO, CA. 95833 (916) 925-4000

NATIONAL CEMETERY ADMINISTRATION

Drawing Title: PARTIAL ONE-LINE DIAGRAM & PANEL SCHEDULES
Approved: Director, Office of Construction Management
Approved: Director, Project Management Service

Project Title: LOUISIANA NATIONAL CEMETERY GRAVESITE EXPANSION PHASE 1B
Building Number | Checked | Drawn
Location: LOUISIANA NATIONAL CEMETERY ZACHARY, LOUISIANA

Date: OCTOBER 24, 2012
Project No. 870CM3023B
DRAWING NO. E-5
Dwg. 140 of 150

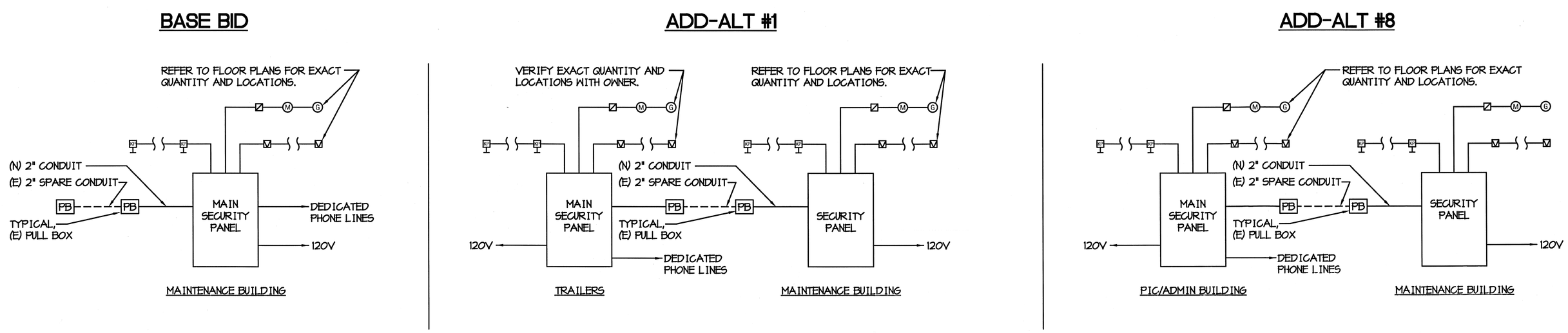

1 **SECURITY SYSTEM SCHEMATIC**

NO SCALE

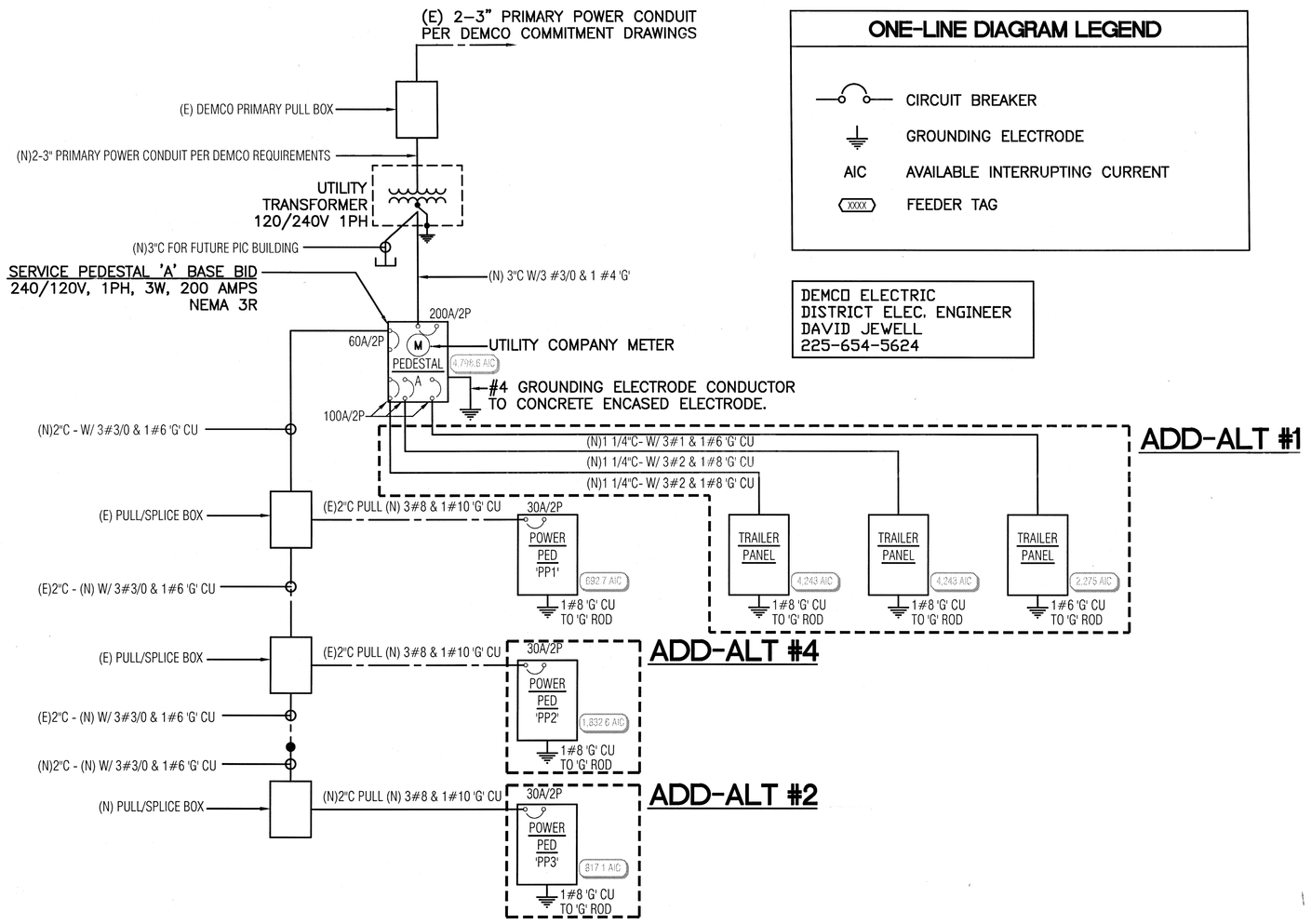

ONE-LINE DIAGRAM LEGEND

	CIRCUIT BREAKER
	GROUNDING ELECTRODE
AIC	AVAILABLE INTERRUPTING CURRENT
XXXX	FEEDER TAG

DEMCO ELECTRIC
DISTRICT ELEC. ENGINEER
DAVID JEWELL
225-654-5624

2 **ONE LINE DIAGRAM-BASE BID WITH ADD-ALT #1, #2, AND #4**

NO SCALE

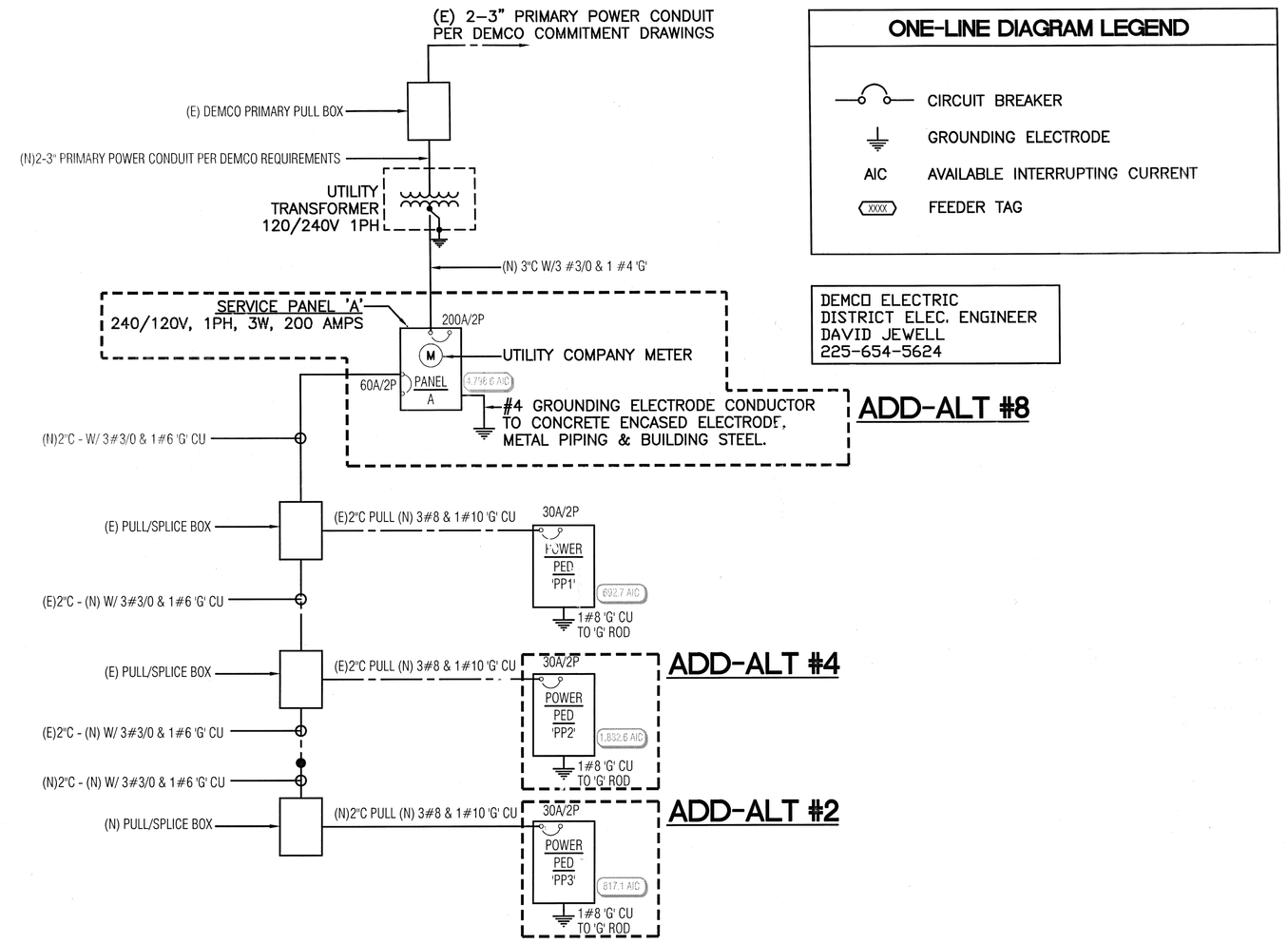

ONE-LINE DIAGRAM LEGEND

	CIRCUIT BREAKER
	GROUNDING ELECTRODE
AIC	AVAILABLE INTERRUPTING CURRENT
XXXX	FEEDER TAG

DEMCO ELECTRIC
DISTRICT ELEC. ENGINEER
DAVID JEWELL
225-654-5624

3 **ONE LINE DIAGRAM-'P.I.C. BUILDING' ADD-ALT #2, #4, AND #8**

NO SCALE

CONSTRUCTION DOCUMENTS

Revisions	Date

REGISTERED PROFESSIONAL ENGINEER — JOHN SHING BONDY LEE — No. E 017376 — Exp. 9-30-14 — ELECTRICAL — STATE OF CALIFORNIA

ECOM ENGINEERING INC.
1796 TRIBUTE RD., SUITE 100
SACRAMENTO, CA. 95815
916.641.9600
916.641.1640 FAX
WWW.ECOMENG.COM
JOB NO. 10E286.00 PM MARK
DESIGNERS MARK

JACOBS
Consultants in Architecture, Engineering, Planning, and the Environment
Sacramento Office
180 Promenade Circle, Suite 300
Sacramento, California 95834
(916) 929-3323 Fax (916) 929-1772

Subconsultant List

DREYFUSS & BLACKFORD	3540 FOLSOM BOULEVARD, SACRAMENTO, CA 95816 (916) 453-1234
CAPITAL ENGINEERING CONSULTANTS	11020 SUN CENTER DRIVE, RANCHO CORDOVA, CA 95670 (916) 851-3500
ECOM ENGINEERING INC.	1796 TRIBUTE ROAD, SUITE 100 SACRAMENTO, CA (916) 641-5600
BUEHLER & BUEHLER STRUCTURAL ENGINEERS, INC.	600 Q STREET, STE. 200, SACRAMENTO, CA. 95811 (916) 443-0303
W.L. BURLE ENGINEERS, PA	111 S. WALNUT STREET, GREENVILLE, MS 38702 (662) 332-2619
AQUA ENGINEERING, INC.	4803 INNOVATION DRIVE, FORT COLLINS, CO 80525 (970) 229-9668
THE SIERRA WEST GROUP, LLC	2730 GATEWAY OAKS DRIVE, STE. 110 SACRAMENTO, CA. 95833 (916) 925-4000

NATIONAL CEMETERY ADMINISTRATION

Drawing Title: WIRING DIAGRAMS & PARTIAL ONE-LINE DIAGRAM

Project Title: LOUISIANA NATIONAL CEMETERY GRAVESITE EXPANSION PHASE 1B

Date: OCTOBER 24, 2012

Project No. 870CM3023B

Approved: Director, Office of Construction Management

Approved: Director, Project Management Service

Building Number | Checked | Drawn

Location: LOUISIANA NATIONAL CEMETERY ZACHARY, LOUISIANA

DRAWING NO. E-4

Dwg. 139 of 150

Lighting Control Panel Schedule

LCP Name:	LCP (ADMIN. BUILDING)
Location:	ELECTRICAL CLOSET 112
Surface/Flush:	SURFACE
Power Circuit:	A-2

RELAY #	CKT #	DESCRIPTION	LV SWITCH/SENSOR	SCENARIO
1	A-2	EXTERIOR/BREEZEWAY LTS.	PHOTOCELL/TIME CLOCK	AUTO ON/SCHED. OFF
2	A-6	RM. 104-112	TIME CLOCK	SCHED. OFF
3	A-2	EXTERIOR/BREEZEWAY LTS.	PHOTOCELL	AUTO ON/SCHED. OFF (NL)
4	SPARE	-	-	-
5	SPARE	-	-	-
6	SPARE	-	-	-
7	SPARE	-	-	-
8	SPARE	-	-	-

Lighting Control Panel Schedule

LCP Name:	LCP (MAINTENANCE BUILDING)
Location:	UNHEATED STORAGE 108
Surface/Flush:	SURFACE
Power Circuit:	B1-26

RELAY #	CKT #	DESCRIPTION	LV SWITCH/SENSOR	SCENARIO
1	B1-26	EXTERIOR LTS.	PHOTOCELL/TIME CLOCK	AUTO ON/SCHED. OFF
2	SPARE	-	-	-
3	SPARE	-	-	-
4	SPARE	-	-	-
5	SPARE	-	-	-
6	SPARE	-	-	-
7	SPARE	-	-	-
8	SPARE	-	-	-

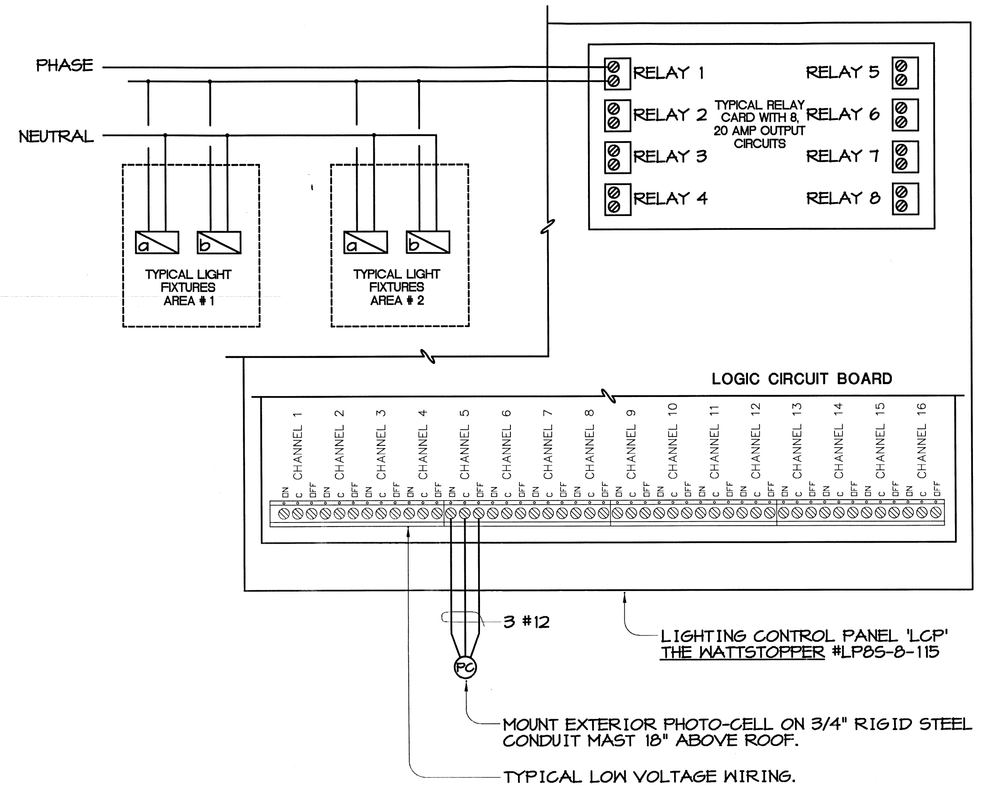

1 TYPICAL - LIGHTING CONTROL WIRING DIAGRAM

SCALE: NONE

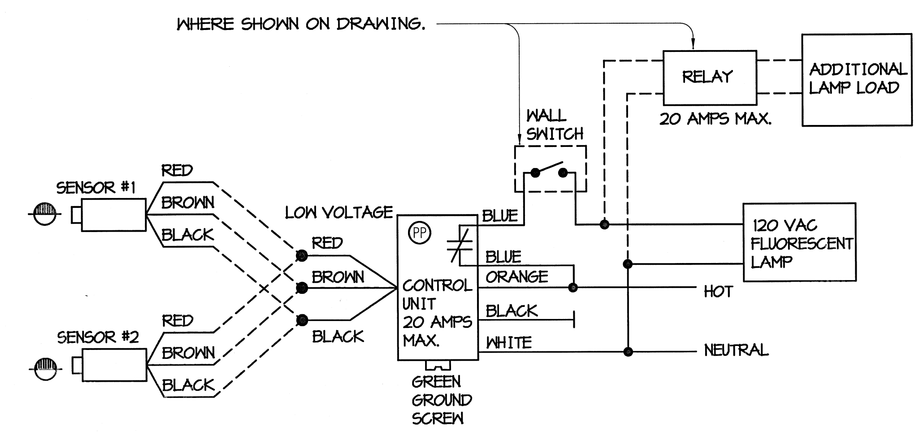

NOTE: FURNISH & INSTALL ALL LOW VOLTAGE CONTROL WIRING BETWEEN MOTION SENSORS & CONTROL UNITS AND CONNECT AS REQ'D. 3 CONDUCTOR, 22 GAUGE, PVC JACKETED AND INSULATED. LOCATE SENSORS PER MANUFACTURER'S RECOMMENDATIONS.

2 TYPICAL - MOTION SWITCHING SYSTEM WIRING DIAGRAM

NO SCALE

BASE BID

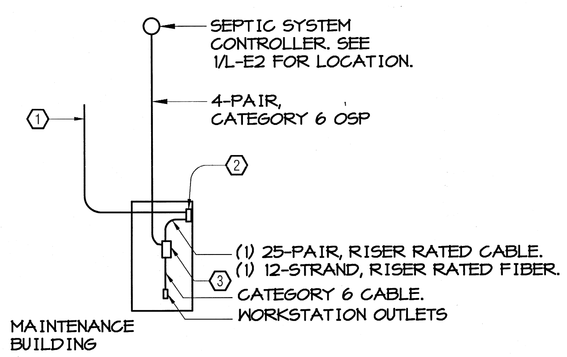

NUMBERED NOTES

1. INCOMING TELEPHONE SERVICE BY AT&T.
2. 25-PAIR PROTECTOR PANEL IN UNHEATED STORAGE ROOM 108 SEE NOTE 16 ON SHEET 3000.E2.
3. REMOTE EQUIPMENT CABINET IN HALLWAY 104.

ADD-ALT #1

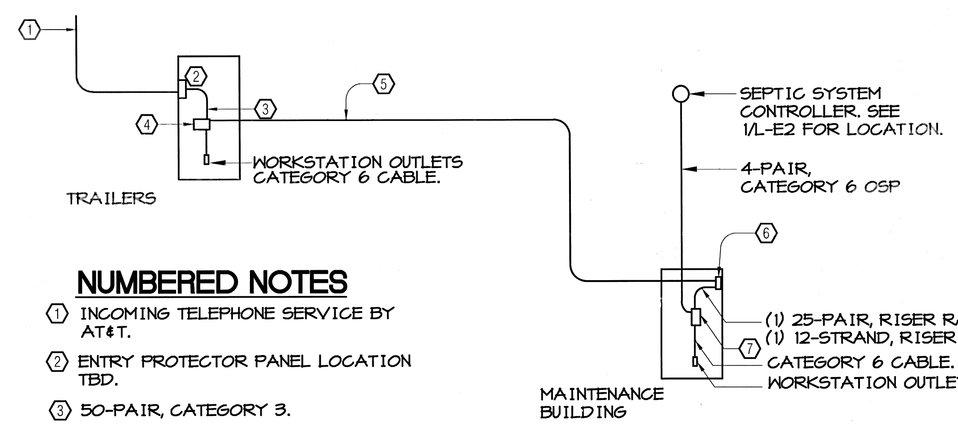

NUMBERED NOTES

1. INCOMING TELEPHONE SERVICE BY AT&T.
2. ENTRY PROTECTOR PANEL LOCATION TBD.
3. 50-PAIR, CATEGORY 3.
4. IDF CABINET, LOCATION TBD.
5. (E) 4 - 2" CONDUITS.
   1 - (1) 12-STRAND 50/125 MM FIBER I/O CABLE
   1 - 25-PAIR CATEGORY 5E I/O CABLE
   1 - FIRE AND SECURITY CABLES
   1 - SPARE
6. 25-PAIR PROTECTOR PANEL IN UNHEATED STORAGE ROOM 108. SEE NOTE 16 ON SHEET 3000.E2.
7. REMOTE EQUIPMENT CABINET IN HALLWAY 104.

ADD-ALT #8

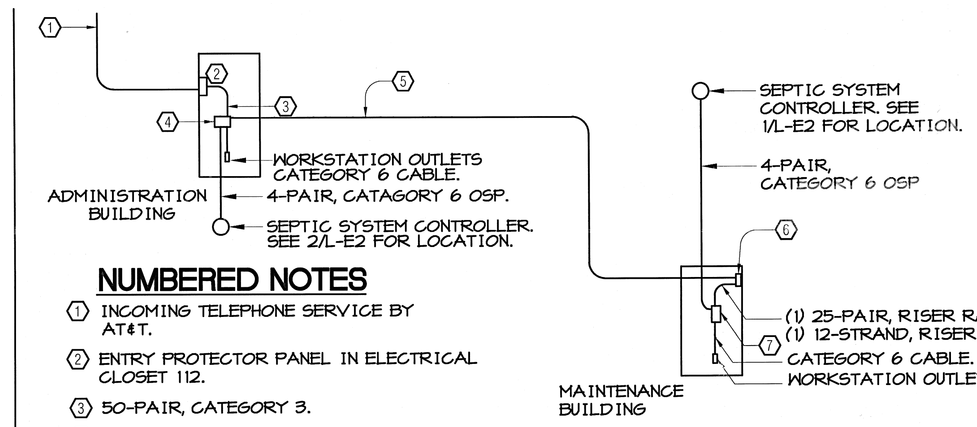

NUMBERED NOTES

1. INCOMING TELEPHONE SERVICE BY AT&T.
2. ENTRY PROTECTOR PANEL IN ELECTRICAL CLOSET 112.
3. 50-PAIR, CATEGORY 3.
4. IDF CABINET IN STORAGE ROOM/KIOSK 102.
5. (E) 4 - 2" CONDUITS.
   1 - (1) 12-STRAND 50/125 MM FIBER I/O CABLE
   1 - 25-PAIR CATEGORY 5E I/O CABLE
   1 - FIRE AND SECURITY CABLES
   1 - SPARE
6. 25-PAIR PROTECTOR PANEL IN UNHEATED STORAGE ROOM 108. SEE NOTE 16 ON SHEET 3000.E2.
7. REMOTE EQUIPMENT CABINET IN HALLWAY 104.

2 ONE-LINE TELECOMMMUNICATIONS DIAGRAM

NO SCALE

BASE BID

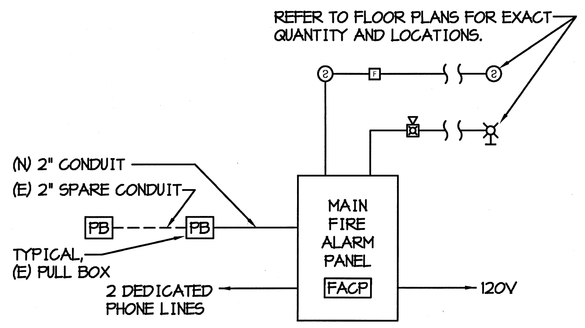

ADD-ALT #1

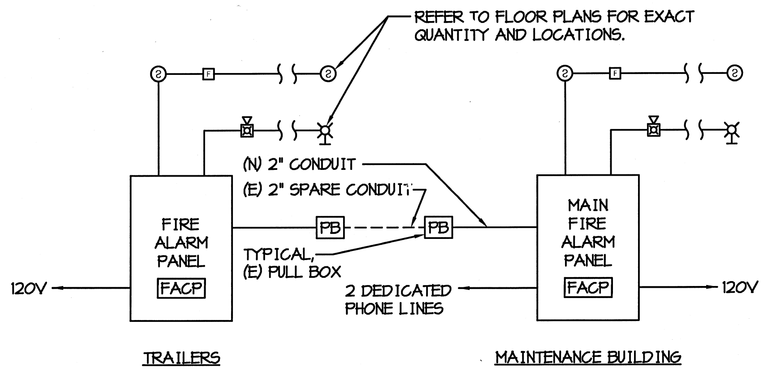

ADD-ALT #8

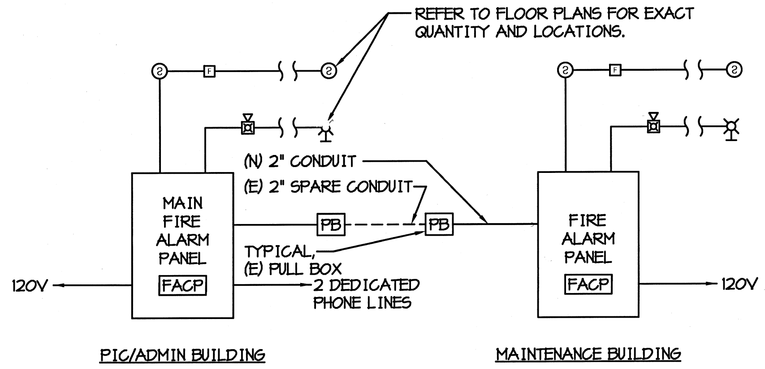

4 FIRE ALARM SCHEMATIC

NO SCALE

CONSTRUCTION DOCUMENTS

Revisions	Date

REGISTERED PROFESSIONAL ENGINEER — YIP SHING DONNY LEE — No. E 017376 — Exp. 9-30-14 — ELECTRICAL — STATE OF CALIFORNIA

ECOM ENGINEERING INC.
1796 TRIBUTE ROAD, SUITE 100
SACRAMENTO, CA. 95815
916.641.5600
916.641.1640 FAX
WWW.ECOMENG.COM
JOB NO. 10E286.00 PM. MARK
DESIGNER MARK

JACOBS
Consultants in Architecture, Engineering, Planning, and the Environment
Sacramento Office
180 Promenade Circle, Suite 300
Sacramento, California 95834
(916) 929-3323 Fax (916) 929-1772

Subconsultant List

DREYFUSS & BLACKFORD	3540 FOLSOM BOULEVARD, SACRAMENTO, CA 95816 (916) 453-1234
CAPITAL ENGINEERING CONSULTANTS	11020 SUN CENTER DRIVE, RANCHO CORDOVA, CA 95670 (916) 851-3500
ECOM ENGINEERING INC.	1796 TRIBUTE ROAD, SUITE 100 SACRAMENTO, CA (916) 641-5600
BUEHLER & BUEHLER STRUCTURAL ENGINEERS, INC.	600 Q STREET, STE. 200, SACRAMENTO, CA. 95811 (916) 443-0303
W.L. BURLE ENGINEERS, PA	111 S. WALNUT STREET, GREENVILLE, MS 38702 (662) 332-2619
AQUA ENGINEERING, INC.	4803 INNOVATION DRIVE, FORT COLLINS, CO 80525 (970) 229-9668
THE SIERRA WEST GROUP, LLC	2730 GATEWAY OAKS DRIVE, STE. 110 SACRAMENTO, CA. 95833 (916) 925-4000

NATIONAL CEMETERY ADMINISTRATION

Drawing Title: WIRING DIAGRAMS	Project Title: LOUISIANA NATIONAL CEMETERY GRAVESITE EXPANSION PHASE 1B		Date: OCTOBER 24, 2012
			Project No. 870CM3023B
Approved: Director, Office of Construction Management	Building Number	Checked / Drawn	DRAWING NO. E-3
Approved: Director, Project Management Service	Location: LOUISIANA NATIONAL CEMETERY ZACHARY, LOUISIANA		Dwg. 138 Of 150

FIXTURE SCHEDULE

TAG	MANUFACTURER & CATALOG NUMBER	DESCRIPTION	MTG.	LAMP TYPE	LAMP No.	VOLTS	WATTS	REMARKS
A	LITHONIA 2SP6 B2U31RN A12125 SLL	2x2 LENSED RECESSED LAY-IN TROFFER	RECESSED	FB031/835	2	120	62	
A2	LITHONIA 2SP6 B232RW A12125 SLL	2x4 LENSED RECESSED LAY-IN TROFFER	RECESSED	F032/835	2	120	47	
B1	GOTHAM LAH 50S 11RN SFL	11" SQUARE LENSED DOWNLIGHT	RECESSED	50W/HPS	1	120	61	UL LISTED FOR WET LOCATIONS
C	LITHONIA 2AV 6 3 17 SBL MVOLT GEB10RS	2x2 DIRECT/INDIRECT RECESSED LAY-IN W/ CENTER MOUNT PARABOLIC BAFFLE	RECESSED	F017/835	3	120	51	
C2	LITHONIA 2AV6 232 MDR	2x4 DIRECT/INDIRECT RECESSED LAY-IN W/ CENTER MOUNT PARABOLIC BAFFLE	RECESSED	F032/835	2	120	47	
D	PRUDENTIAL PRU-T-3T8 04 LPA TMN D9 SC CA48 X3	4' SUSPENDED LIGHT FIXTURE	SUSPANDED	F032/835	3	120	73	
E1	GOTHAM AF 1/26TRT 6AR C6L	6" RECESSED LENSED WHITE TRIM DOWNLIGHT. HORIZ. LAMP	RECESSED	26TRT/835	1	120	20	
EM	LITHONIA ELM2-SD	EMERGENCY LIGHT UNIT	SURFACED	FURNISHED W/ FIXTURE		120	12	90 MIN. BATTERY
F4	LITHONIA C 1 32 MVOLT GEB W6GUN	4' GENERAL PURPOSE STRIP	SURFACE	F032/835	1	120	25	FURNISH WITH WIREGUARD
F5	PRUDENTIAL LIGHTING P-61 2T8 04' FRA TMN D1 SC 120 WB	4' SURFACE MOUNTED LIGHT	SURFACE	F032/835	2	120	47	
G	LITHONIA WSQ 50S WT 120 WLU DBLB	DECORATIVE EXTERIOR WALL-MOUNT	SURFACE	50W/HPS	1	120	61	UL LISTED FOR WET LOCATIONS
H	EVO LUCIA/SEPCO LP315	11"x7.5" SURFACE MOUNTED LED	SURFACE	FURNISHED W/ FIXTURE		12 VDC	15	
I	LITHONIA AF10 332 HC36	4' THREE LAMP INDUSTRIAL	SUSPENDED @ +12'-0" AFF	F032/835	3	120	73	(1) 3-LAMP BALLAST W/ B.F.= 0.71
J	LITHONIA WP 2 32 MVOLT GEB10RS	4' WALL BRACKET	SURFACE	F032/835	2	120	47	
P	GOTHAM L6FV 18TRT 6RN FOL	6" RECESSED LENSED WHITE SHOWER LIGHT VERT. LAMP	RECESSED	CFTR18W/ GX24q/835	1	277	25	UL LISTED FOR WET LOCATIONS
R1	BEACON FL-1-24W-NF-GS	FLAG SPOT LIGHTING	IN GROUND	FURNISHED W/ FIXTURE		120	24	
R2	HYDREL 8100-36LED-700MA-WHT30K-MVOLT-SP-YM-LPI	FLAG SPOT LIGHTING	IN GROUND	FURNISHED W/ FIXTURE		120	87	
S	HYDREL PDX10-SS-22LED-WHT30K-MVOLT-WFL-FLC-34S-LPI	SIGN LIGHT	GROUND	FURNISHED W/ FIXTURE		120	22	
Q	LITHONIA AW-232	4' WRAP AROUND	SURFACE	F032/835	2	120	47	
X	LITHONIA LES 1R ELN SD	DIE CAST LED ALUMINUM EXIT WITH SELF DIAGNOSTICS	CEILING	FURNISHED W/ FIXTURE		120	3	SINGLE FACE SIGN WITH BATTERY PACK

LIGHTING FIXTURE NOTES:

1. THE EXACT MOUNTING LOCATION FOR ALL LIGHT FIXTURES SHALL BE DETERMINED FROM THE ARCHITECTURAL REFLECTED CEILING PLANS.
2. MANUFACTURER AND DESCRIPTIONS NOTED ARE TO ESTABLISH MINIMUM STANDARDS. PRODUCTS WILL BE REVIEWED BASED ON PHOTOMETRICS, CONSTRUCTION AND APPEARANCE.
3. ALL FLUORESCENT AND COMPACT FLUORSCENT LIGHT FIXTURES SHALL BE FURNISHED WITH ELECTRONIC BALLASTS, SEE SPECIFICATIONS.

MECHANICAL EQUIPMENT SCHEDULE

DESIGNATION	VOLTAGE/PHASE	EQUIPMENT	HP	FLA	KVA	REMARKS
HP 1	230/1	HEAT PUMP	1/3	3.0	-	-
HP 2	230/1	HEAT PUMP	1/3	3.0	-	-
HP 3	230/1	HEAT PUMP	1/3	3.0	-	-
HP 4	208/1	HEAT PUMP	1	9.5	-	-
CU 1	230/1	CONDENSING UNIT		20	-	-
CU 2	230/1	CONDENSING UNIT		15	-	-
CU 3	230/1	CONDENSING UNIT	-	20	-	-
CU 4	208/1	CONDENSING UNIT	-	34	-	-
EWH 1	240/1	ELECTRIC WATER HEATER	-	20.8	5.0	-
EWH 2	208/3	ELECTRIC WATER HEATER	-	37.5	9.0	-
CP 1	120/1	DOMESTIC WATER CIRCULATION PUMP	1/25	0.48	-	-
CP 2	120/1	DOMESTIC WATER CIRCULATION PUMP	1/25	0.48	-	-
SAC 1	208-230/1	SPLIT AIR CONDITIONING UNIT	-	1.18	0.03	-
SCU 1	208-230/1	SPLIT CONDENSING UNIT	-	9.0	2.16	-
EUH 1	208/1	ELECTRIC UNIT HEATER	1/40	13.1	2.6	-
EUH 2	208/1	ELECTRIC UNIT HEATER	1/40	13.1	2.6	-
EUH 3	208/1	ELECTRIC UNIT HEATER	1/40	13.1	2.6	-
EUH 4	208/1	ELECTRIC UNIT HEATER	1/40	13.1	2.6	-
EF 1	120/1	EXHAUST FAN	1/4	5.8	.70	-
EF 2	120/1	EXHAUST FAN	1/4	5.8	.70	-
EF 3	120/1	EXHAUST FAN	1/4	5.8	.70	-
EF 4	120/1	EXHAUST FAN	1/4	5.8	.70	-

CONSTRUCTION DOCUMENTS

FIRE ALARM NOTES

1. THE FIRE ALARM SYSTEM SHALL CONFORM TO ALL APPLICABLE STATE AND LOCAL CODES.
2. THE LOCATION OF THE AUTOMATIC FIRE ALARM SYSTEM DETECTORS, MANUAL STATIONS, AUDIBLE DEVICES AND RELATED EQUIPMENT AS SHOWN ON PLANS ARE ONLY FOR REFERENCE AND DO NOT CONSTITUTE SHOP DRAWINGS WHICH ARE REQUIRED FOR REVIEW AND APPROVAL.
3. FIRE PROTECTIVE SIGNALING EQUIPMENT: INSTALLATION OF FIRE PROTECTIVE SIGNALING SYSTEM SHALL NOT BE STARTED UNTIL DETAILED PLANS AND SPECIFICATIONS, INCLUDING PROJECT CUT SHEETS FOR EACH COMPONENT OF THE SYSTEM. UPON RECEIPT OF REVIEWED SUBMITTALS FROM THE ARCHITECT, THE ELECTRICAL TRADE SHALL SUBMIT TO AND OBTAIN WRITTEN APPROVAL OF FIRE ALARM SYSTEM AND COMPONENTS FROM THE LOCAL FIRE MARSHAL.
4. UPON COMPLETION OF THE INSTALLATION OF THE FIRE PROTECTIVE SIGNALING EQUIPMENT, A SATISFACTORY TEST OF THE ENTIRE SYSTEM SHALL BE MADE IN THE PRESENCE OF THE ENFORCING FIRE AGENCY.
5. SMOKE DETECTORS SHALL NOT BE INSTALLED UNTIL AFTER THE CONSTRUCTION CLEAN-UP OF ALL TRADES IS COMPLETE AND FINAL, EXCEPT WHERE REQUIRED BY THE AUTHORITY HAVING JURISDICTION FOR PROTECTION DURING CONSTRUCTION.
6. THE FIRE ALARM SYSTEM INDICATED ON THE CONTRACT DOCUMENTS IS SHOWN FOR DESIGN INTENT ONLY. THE CONTRACTOR SHALL BE RESPONSIBLE FOR THE FINAL DESIGN OF THE FIRE ALARM SYSTEM AND ITS COMPLIANCE WITH ALL APPLICABLE CODE REQUIREMENTS.

FIRE ALARM SYSTEM SEQUENCE OF OPERATION MATRIX

X = REQUIRED ACTION
BLANK MEANS NOT APPLICABLE

	CAUSE	EFFECT: ALARM: ALARM AT FACP	ALARM: ALARM AT OFF-SITE REPORTING	ALARM: ACTIVATE AUDIBLE/VISUAL ALARMS			TROUBLE: TROUBLE AT FACP	TROUBLE: TROUBLE AT REMOTE ANNUNCIATOR	TROUBLE: TROUBLE AT OFF-SITE REPORTING		SUPERVISORY: SUPERVISORY AT FACP	SUPERVISORY: SUPERVISORY AT REMOTE ANNUNCIATOR	SUPERVISORY: SUPERVISORY AT OFF-SITE REPORTING		REMARKS	
1	MANUAL FIRE ALARM STATIONS	X		X	X											1
2	AREA SMOKE OR THERMAL DETECTORS	X		X	X											2
3	POWER FAILURE						X	X	X							3
4	FIRE ALARM TROUBLE (OPEN, SHORTS OR GROUNDS ON INITIATION, NOTIFICATION OR SIGNALING LINE CIRCUITS)						X	X	X							4
5	SPECIAL EXTINGUISHING SYSTEMS (ANSUL SYSTEM)	X		X	X											5

CONSTRUCTION DOCUMENTS

Revisions | Date

REGISTERED PROFESSIONAL ENGINEER — JI SHING BONNY LEE — No. E 017376 — Exp. 9-30-14 — ELECTRICAL — STATE OF CALIFORNIA

ECOM ENGINEERING INC.
1795 TRIBUTE ROAD, SUITE 100
SACRAMENTO, CA. 95815
916.641.5600
916.641.1640 FAX
WWW.ECOMENG.COM
JOB NO. 10E286.00 PM MARK
DESIGNER MARK

JACOBS
Consultants in Architecture, Engineering, Planning, and the Environment
Sacramento Office
180 Promenade Circle, Suite 300
Sacramento, California 95834
(916) 929-3323 Fax (916) 929-1772

Subconsultant List

DREYFUSS & BLACKFORD	3540 FOLSOM BOULEVARD, SACRAMENTO, CA 95816 (916) 453-1234
CAPITAL ENGINEERING CONSULTANTS	11020 SUN CENTER DRIVE, RANCHO CORDOVA, CA 95670 (916) 851-3500
ECOM ENGINEERING INC.	1796 TRIBUTE ROAD, SUITE 100 SACRAMENTO, CA (916) 641-5600
BUEHLER & BUEHLER STRUCTURAL ENGINEERS, INC.	600 Q STREET, STE. 200, SACRAMENTO, CA. 95811 (916) 443-0303
W.L. BURLE ENGINEERS, PA	111 S. WALNUT STREET, GREENVILLE, MS 38702 (662) 332-2619
AQUA ENGINEERING, INC.	4803 INNOVATION DRIVE, FORT COLLINS, CO 80525 (970) 229-9668
THE SIERRA WEST GROUP, LLC	2730 GATEWAY OAKS DRIVE, STE. 110 SACRAMENTO, CA. 95833 (916) 925-4000

NATIONAL CEMETERY ADMINISTRATION

Drawing Title: FIXTURE SCHEDULE, MECHANICAL SCHEDULE & FIRE ALARM SCHEDULE

Project Title: LOUISIANA NATIONAL CEMETERY GRAVESITE EXPANSION PHASE 1B

Date: OCTOBER 24, 2012

Project No. 870CM3023B

Approved: Director, Office of Construction Management

Approved: Director, Project Management Service

Building Number | Checked | Drawn

Location: LOUISIANA NATIONAL CEMETERY ZACHARY, LOUISIANA

DRAWING NO. E-2

Dwg. 137 of 150

SHEET INDEX

SHEET	DESCRIPTION
E-1	SYMBOLS LIST AND SHEET INDEX
E-2	FIXTURE SCHEDULE, MECHANICAL SCHEDULE, AND FIRE ALARM SCHEDULE
E-3	WIRING DIAGRAMS
E-4	WIRING DIAGRAMS AND PARTIAL ONE-LINE DIAGRAM
E-5	PARTIAL ONE-LINE DIAGRAM AND PANEL SCHEDULES
E-6	ELECTRICAL DETAILS
E-7	ELECTRICAL DETAILS
E-8	ELECTRICAL DETAILS
E-9	ELECTRICAL DETAILS
1400-E1	PIG/ADMINISTRATION FLOOR PLAN - LIGHTING - ADD-ALT. #6
1400-E2	PIG/ADMINISTRATION FLOOR PLAN - POWER & SIGNAL - ADD-ALT. #6
2000-E1	COMMITTAL SHELTER FLOOR PLANS - ELECTRICAL - ADD-ALT. #5
2000-E2	SOLAR POWER SYSTEMS DETAILS - ADD-ALT. #5
3000-E1	MAINTENANCE BUILDING FLOOR PLAN - LIGHTING
3000-E2	MAINTENANCE BUILDING FLOOR PLAN - POWER & SIGNAL
L-E1	OVERALL SITE PLAN - ELECTRICAL
L-E2	SITE LAYOUT ENLARGEMENT PLANS - ELECTRICAL
L-E3	SITE LAYOUT ENLARGEMENT PLAN - ADD-ALT. #1 - ELECTRICAL
L-E4	SITE LAYOUT ENLARGEMENT PLAN - ADD-ALT. #6 - ELECTRICAL

STANDARD ELECTRICAL SYMBOLS

- FLUORESCENT LIGHT FIXTURE-RECESSED.
- FLUORESCENT LIGHT FIXTURE-RECESSED.
- FLUORESCENT LIGHT FIXTURE-SURFACE.
- FLUORESCENT LIGHT FIXTURE-SUSPENDED.
- FLUORESCENT LIGHT FIXTURE- INDUSTRIAL STRIP
- EMERGENCY LIGHT.
- LIGHT FIXTURE-WALL MOUNTED.
- LIGHT FIXTURE-RECESSED.
- GROUND MOUNTED LIGHT FIXTURE.
- EXIT SIGN.
- B — LIGHT FIXTURE TAG, LETTER INDICATES TYPE, SEE FIXTURE SCHEDULE.
- S — SINGLE POLE TOGGLE SWITCH, +46" UNLESS NOTED.
- S_T — SINGLE POLE, 120 VOLT, MANUAL MOTOR STARTER WITH BUILT IN THERMAL OVERLOAD PROTECTION SIZED TO SUIT MOTOR NAMEPLATE RATING. MOUNTED AT +72" UNLESS NOTED.
- S_{LT} — SPRING LOADED TIMER SEPCO SLT OR APPROVED EQUAL. +46" UNLESS OTHERWISE NOTED.
- S_a — SWITCH SUBSCRIPTS; *a,b,c* = DEVICE CONTROLLED,
- $ — LOW VOLTAGE DC DP/DT DIMMER SWITCH.
- SINGLE LEVEL WALL MOUNTED OCCUPANCY SENSOR, +46" UNLESS NOTED.
- 2 — DUAL LEVEL WALL MOUNTED OCCUPANCY SENSOR. +46" UNLESS NOTED.
- CEILING MOUNTED DUAL TECHNOLOGY OCCUPANCY SENSOR.
- UL — CEILING MOUNTED ULTRASONIC OCCUPANCY SENSOR.
- DC — CEILING MOUNTED 12V DC PIR OCCUPANCY SENSOR SPECO OCS OR APPROVED EQUAL.
- a,b — CEILING MOUNTED DUAL LEVEL, DUAL TECHNOLOGY OCCUPANCY SENSOR.
- PC — PHOTO CELL.
- PP — OCCUPANCY SENSOR POWER PACK.
- FUSED DISCONNECT SWITCH WITH TIME DELAY FUSES, SIZE TO SUIT EQUIPMENT NAMEPLATE RATING. MATCH HP RATING WHEN USED WITH MOTOR.
- CONTROL AND/OR EQUIPMENT, N.I.E.S., INSTALL AND CONNECT AS REQ'D. SEE MECHANICAL DRAWINGS.
- MOTOR, N.I.E.S., CONNECT AS REQ'D.
- EQUIPMENT DESIGNATION.
- DISTRIBUTION PANEL.
- PANELBOARD.
- TERMINAL CABINET, SIZE AND TYPE AS INDICATED.
- 20 AMP 125V 3W DUPLEX CONVENIENCE RECEPTACLE, +18" UNLESS NOTED.
- 20 AMP 125V 3W NEMA 5-20R DOUBLE DUPLEX RECEPTACLE, +18" UNLESS NOTED.
- WELDER RECEPTACLE.
- 20 AMP 125V 3W NEMA 5-20R DUPLEX RECEPTACLE, EQUIPPED WITH GROUND FAULT CIRCUIT INTERRUPTER, +42" UNLESS NOTED.
- FLUSH FLOOR MOUNTED POWER/COMMUNICATIONS BOX WITH ONE DUPLEX RECEPTACLE AND PROVISIONS FOR LOW VOLTAGE WIRING. PROVIDE APPROPRIATE COVER PLATE. WIREMOLD RFB4 OR EQUAL.
- SURFACE NON-METALLIC 2-CIRCUIT PLUG STRIP, WIREMOLD NM2000 SERIES OR APPROVED EQUAL, WITH PRE-WIRED 15A 120V NEMA 5-15R OUTLETS. RECEPTACLES 12" ON CENTER.

OUTLET SUBSCRIPTS DESIGNATING THE FOLLOWING:

- A — A = OUTLET MOUNTED ABOVE COUNTER TOP.
- JUNCTION BOX, SIZE AND TYPE AS INDICATED OR AS REQ'D.
- JUNCTION BOX, SIZE AND TYPE AS INDICATED OR AS REQ'D. WALL MOUNTED.
- PUSH PLATE DOOR OPERATOR. VERIFY REQUIRMENTS WITH VENDOR.

STANDARD ABBREVIATIONS

(E)	EXISTING
(N)	NEW
C	CONDUIT
I/O	INPUT/OUTPUT
C/B	CIRCUIT BREAKER

STANDARD ELECTRICAL SYMBOLS CONT.

- TELEPHONE/DATA OUTLET, 2 DATA AND 1 VOICE. CATEGORY 6 CABLE. 4 11/16" SQUARE X 2⅛" DEEP BOX WITH ONE DEVICE RING, MOUNTED AT +18" UNLESS NOTED. HOMERUN 1" CONDUIT TO DATA CABINET.
- # — DATA OUTLET. CATEGORY 6 CCABLE. 4 11/16" SQUARE X 2⅛" WITH ONE DEVICE RING, MOUNTED AT +18" UNLESS NOTED. HOMERUN 1" CONDUIT TO DATA CABINET. TERMINATE PER SHEET NOTE.
- W — WALL TELEPHONE, CATEGORY 6 CABLE. 4 11/16" SQUARE X 2⅛" DEEP BOX WITH ONE DEVICE RING, MOUNTED AT +48" UNLESS NOTED. HOMERUN 1" CONDUIT TO DATA CABINET. TERMINATE ON 110-BLOCK.
- TELECOMMUNICATIONS SYSTEM GROUND BUS BAR, +84".
- H — TELEVISION OUTLET, 4 11/16" SQUARE BOX WITH 1-DEVICE RING AND PLATE, +18" UNLESS NOTED.
- N.I.E.S. — NOT IN ELECTRICAL SECTION OF THESE PLANS AND SPEC'S.
- MT — EMPTY CONDUIT WITH PULL-LINE.
- WP — WEATHERPROOF, DAMP OR WET LOCATION AS REQUIRED.
- 'G' — GREEN INSULATED GROUND WIRE, #12 AWG UNLESS NOTED.
- NL — NIGHT LIGHT.
- 2 — NUMBERED NOTE.
- EXISTING CONDUIT RUN TO BE ABANDONED, CONDUIT ABOVE THE FLOOR AND BELOW THE STRUCTURE ABOVE SHALL BE REMOVED.
- CONDUIT RUN CONCEALED BELOW FINISHED FLOOR OR GRADE.
- HOME RUN TO RESPECTIVE PANEL OR TERMINAL CABINET.
- BRANCH CIRCUIT WITHOUT FURTHER DESIGNATION INDICATES A 2 #12 AWG CIRCUIT WITH 1 #12 AWG GROUND.
- CROSSLINES INDICATE NUMBER OF #12 AWG WIRES WHEN MORE THAN 2 WITH 1 #12 AWG GROUND.
- 10 — BRANCH CIRCUIT WITH GROUND WIRE LARGER THAN #12 AWG. NUMBER ADJACENT TO CROSSLINE INDICATES WIRE SIZE.
- 10 — BRANCH CIRCUIT WITH CONDUCTORS LARGER THAN #12 AWG. NUMBER ADJACENT TO CROSSLINES INDICATES WIRE SIZE.
- CONDUIT RISER UP.
- REMOVE (E) WIRE PULL NEW WIRES, #12 AWG UNLESS NOTED.

FIRE ALARM SYMBOLS

- FIRE ALARM HORN/STROBE, WALL MOUNTED.
- FIRE ALARM HORN, WALL MOUNTED.
- FIRE ALARM STROBE, WALL MOUNTED.
- M — FIRE ALARM MANUAL PULL STATION, WALL MOUNTED.
- S — FIRE ALARM SMOKE DETECTOR CEILING MOUNTED.
- H — FIRE ALARM HEAT DETECTOR CEILING MOUNTED.
- FACP — FIRE ALARM CONTROL PANEL.

SECURITY SYSTEM SYMBOLS

- M — SECURITY SYSTEM PIR MOTION SENSOR, WALL MOUNTED. 6" BELOW FINISHED CEILING.
- G — SECURITY SYSTEM GLASS BREAK DETECTOR, CEILING MOUNTED.
- SECURITY SYSTEM ALARM SIREN.
- SECURITY SYSTEM BALANCED MAGNETIC DOOR SWITCH.
- KP — SECURITY SYSTEM KEYPAD, MOUNTED AT +48".
- IP SECURITY CAMERA. 1 - CATEGORY 6 CABLE.

CONSTRUCTION DOCUMENTS

CONSTRUCTION DOCUMENTS

Revisions	Date

REGISTERED PROFESSIONAL ENGINEER — SHING DONGYEE — No. E 017376 — Exp. 9-30-14 — ELECTRICAL — STATE OF CALIFORNIA

ECOM ENGINEERING INC.
1796 TRIBUTE ROAD, SUITE 100
SACRAMENTO, CA. 95815
916.641.5600
916.641.1640 FAX
WWW.ECOMENG.COM
JOB NO. 10E286.00 PM MARK
DESIGNER MARK

JACOBS
Consultants in Architecture, Engineering, Planning, and the Environment
Sacramento Office
180 Promenade Circle, Suite 300
Sacramento, California 95834
(916) 929-3323 Fax (916) 929-1772

Subconsultant List

DREYFUSS & BLACKFORD	3540 FOLSOM BOULEVARD, SACRAMENTO, CA 95816 (916) 453-1234
CAPITAL ENGINEERING CONSULTANTS	11020 SUN CENTER DRIVE, RANCHO CORDOVA, CA 95670 (916) 851-3500
ECOM ENGINEERING INC.	1796 TRIBUTE ROAD, SUITE 100 SACRAMENTO, CA (916) 641-5600
BUEHLER & BUEHLER STRUCTURAL ENGINEERS, INC.	600 Q STREET, STE. 200, SACRAMENTO, CA. 95811 (916) 443-0303
W.L. BURLE ENGINEERS, PA	111 S. WALNUT STREET, GREENVILLE, MS 38702 (662) 332-2619
AQUA ENGINEERING, INC.	4803 INNOVATION DRIVE, FORT COLLINS, CO 80525 (970) 229-9668
THE SIERRA WEST GROUP, LLC	2730 GATEWAY OAKS DRIVE, STE. 110 SACRAMENTO, CA. 95833 (916) 925-4000

NATIONAL CEMETERY ADMINISTRATION

Drawing Title: SYMBOLS LIST & SHEET INDEX	Project Title: LOUISIANA NATIONAL CEMETERY GRAVESITE EXPANSION PHASE 1B		Date: OCTOBER 24, 2012
Approved: Director, Office of Construction Management	Building Number	Checked / Drawn	Project No. 870CM3023B
Approved: Director, Project Management Service	Location: LOUISIANA NATIONAL CEMETERY ZACHARY, LOUISIANA		DRAWING NO. E-1 Dwg. 136 of 150

CONSTRUCTION DOCUMENTS

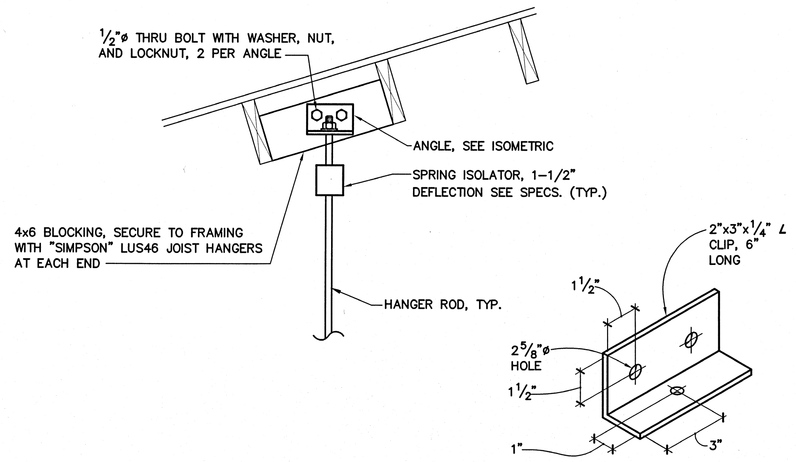

EQUIPMENT MOUNTING DETAIL

SCALE : NONE

6 / P-3

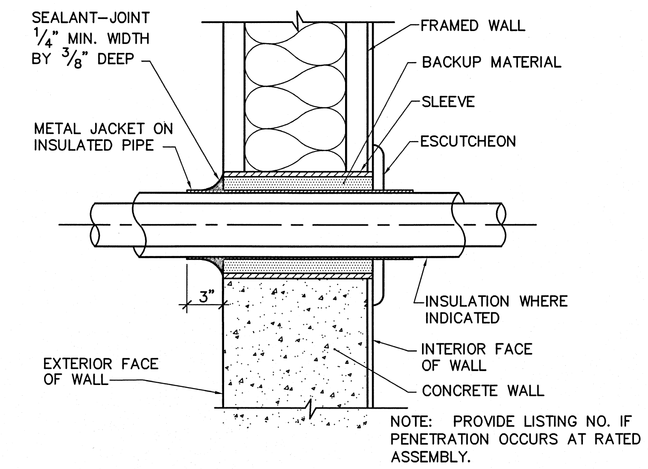

PIPE THRU WALL DETAIL

SCALE : NONE

3 / P-3

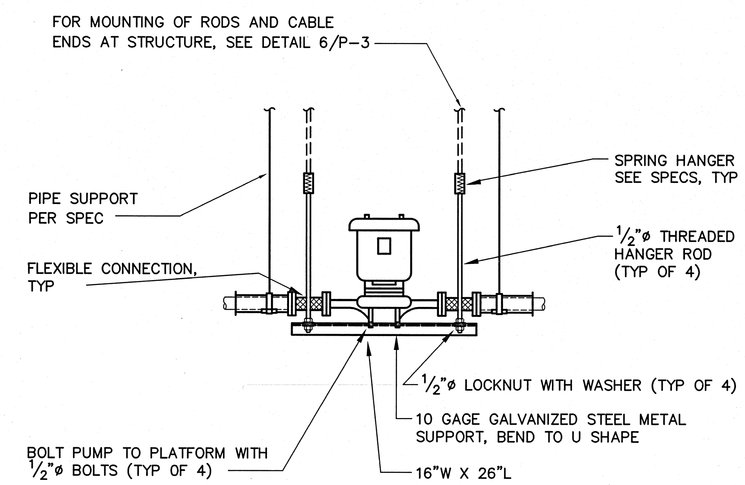

CIRCULATING PUMP MOUNTING

SCALE : NONE

5 / P-3

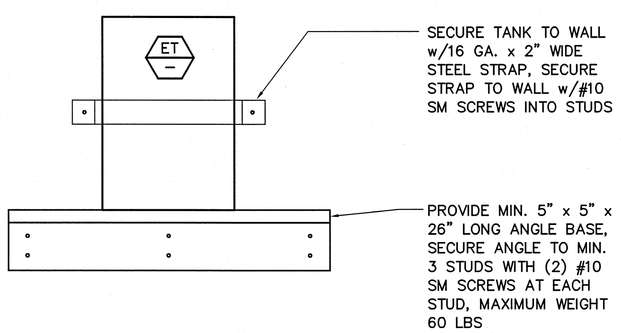

EXPANSION TANK MOUNTING

SCALE : NONE

2 / P-3

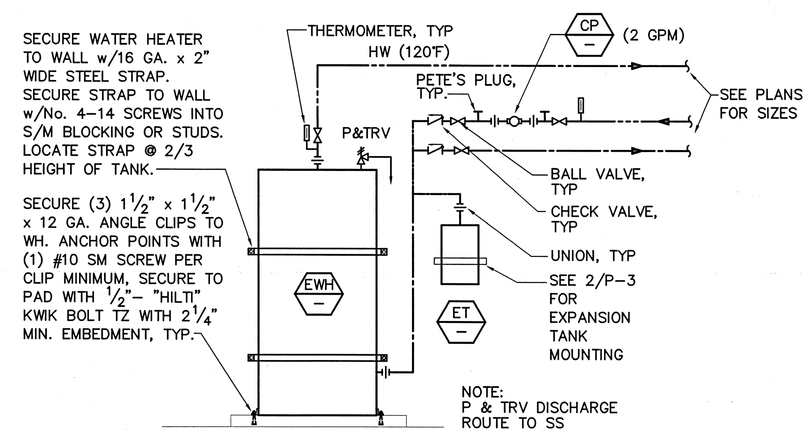

ELECTRIC WATER HEATER

SCALE : NONE

4 / P-3

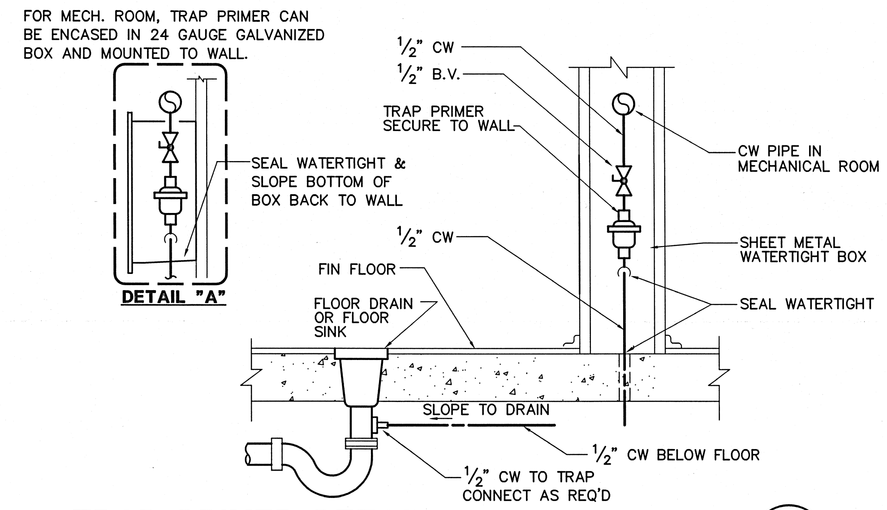

TRAP PRIMER DETAIL

SCALE : NONE

1 / P-3

CONSTRUCTION DOCUMENTS

Revisions	Date

CAPITAL ENGINEERING CONSULTANTS, INC.
RANCHO CORDOVA, CALIFORNIA
BZ/JD DESIGNER/DRAFTER 110103.00 PROJECT NO.
REGISTERED PROFESSIONAL ENGINEER — STATE OF CALIFORNIA — M 23713 EXPIRES 6/30/13 — MECHANICAL
DATE SIGNED: 10/19/12

JACOBS
Consultants in Architecture, Engineering, Planning, and the Environment
Sacramento Office
180 Promenade Circle, Suite 300
Sacramento, California 95834
(916) 929-3323 Fax (916) 929-1772

Subconsultant List

DREYFUSS & BLACKFORD	3540 FOLSOM BOULEVARD, SACRAMENTO, CA 95816 (916) 453-1234
CAPITAL ENGINEERING CONSULTANTS	11020 SUN CENTER DRIVE, RANCHO CORDOVA, CA 95670 (916) 851-3500
ECOM ENGINEERING INC.	1796 TRIBUTE ROAD, SUITE 100 SACRAMENTO, CA (916) 641-5600
BUEHLER & BUEHLER ASSOCIATES	600 Q STREET, STE. 200, SACRAMENTO, CA. 95814 (916) 443-0303
W.L. BURLE ENGINEERS, PA	111 S. WALNUT STREET, GREENVILLE, MS 38702 (662) 332-2619
AQUA ENGINEERING, INC.	4803 INNOVATION DRIVE, FORT COLLINS, CO 80525 (970) 229-9668
THE SIERRA WEST GROUP, LLC	2730 GATEWAY OAKS DRIVE, STE. 110 SACRAMENTO, CA. 95833 (916) 925-4000

NATIONAL CEMETERY ADMINISTRATION

Drawing Title: PLUMBING DETAILS	Project Title: LOUISIANA NATIONAL CEMETERY GRAVESITE EXPANSION PHASE 1B		Date: OCTOBER 24, 2012
Approved: Director, Office of Construction Management	Building Number	Checked / Drawn	Project No. 870CM3023B
Approved: Director, Project Management Service	Location: LOUISIANA NATIONAL CEMETERY ZACHARY, LOUISIANA		DRAWING NO. P-3
			Dwg. 135 Of 150

L:\2011\110103.00\1200 Drawings\1205 AutoCAD Project Files\P-3.DWG - October 19, 2012 - RE - 40

PLUMBING FIXTURE SPECIFICATION AND CONNECTION SCHEDULE

ADA	SYMBOL	FIXTURE	FIXTURE MANUFACTURER AND MODEL No.	FAUCET OR VALVE MANUFACTURER AND MODEL No.	TRIM MANUFACTURER AND MODEL No.	REMARKS	VENT	WASTE		COLD WATER		HOT WATER	
								BRANCH	OUTLET	BRANCH	OUTLET	BRANCH	OUTLET
	WC-1	**WATER CLOSET** WALL MOUNTED FLUSH VALVE	"AMERICAN STANDARD" AFWALL EL 1.6, NO. 2257.103, WALL HUNG, VITREOUS CHINA, ELONGATED, SIPHON JET ACTION, 1-1/2" TOP SPUD.	"SLOAN" OPTIMA ROYAL 111 SMO, ADA COMPLIANT, 1.6 GPF, SENSOR OPERATED CHROME PLATED FLUSHOMETER. UNIT INCLUDES – MANUAL OVERIDE BUTTON. BATTERY POWERED.	SEAT: "OLSONITE" MODEL 10SSC. PROVIDE WITH SELF-SUSTAINING CONCEALED CHECK HINGES, ONE PIECE STAINLESS STEEL POST HINGES, WHITE COLOR. CARRIER: "J.R. SMITH" 100 OR 200 SERIES VERTICAL ONLY PROVIDE REAR SUPPORT LUG AND ANCHOR FOOT ASSEMBLY.	MOUNT AT HEIGHT INDICATED ON ARCHITECTURAL DRAWINGS. WHERE USED FOR ADA ACCESSIBLE WATER CLOSETS, THE FLUSH VALVE HANDLE SHALL BE MOUNTED ON THE WIDE SIDE OF THE WC ENCLOSURE.	2"	4"	4"	1 1/4"	1"	–	–
♿	WC-2	**WATER CLOSET** WALL MOUNTED FLUSH VALVE ADA	"AMERICAN STANDARD" AFWALL EL 1.6, NO. 2257.103, WALL HUNG, VITREOUS CHINA, ELONGATED, SIPHON JET ACTION, 1-1/2" TOP SPUD.	"SLOAN" OPTIMA ROYAL 111 SMO, ADA COMPLIANT, 1.6 GPF, SENSOR OPERATED CHROME PLATED FLUSHOMETER. UNIT INCLUDES – MANUAL OVERIDE BUTTON. BATTERY POWERED.	SEAT: "OLSONITE" MODEL 10SSC. PROVIDE WITH SELF-SUSTAINING CONCEALED CHECK HINGES, ONE PIECE STAINLESS STEEL POST HINGES, WHITE COLOR. CARRIER: "J.R. SMITH" 100 OR 200 SERIES VERTICAL ONLY PROVIDE REAR SUPPORT LUG AND ANCHOR FOOT ASSEMBLY.	MOUNT AT HEIGHT INDICATED ON ARCHITECTURAL DRAWINGS. WHERE USED FOR ADA ACCESSIBLE WATER CLOSETS, THE FLUSH VALVE HANDLE SHALL BE MOUNTED ON THE WIDE SIDE OF THE WC ENCLOSURE.	2"	4"	4"	1 1/4"	1"	–	–
♿	UR-1	**URINAL** WALL MOUNTED FLUSH VALVE ADA	"AMERICAN STANDARD" WASHBROOK NO. 6501.010 WALL HUNG, VITREOUS CHINA, WASH OUT FLUSH ACTION. 1.0 GPF. 3/4" TOP SPUD, 2" THREADED OUTLET	"SLOAN" OPTIMA ROYAL 186-1.0-SMO, ADA COMPLIANT, 1.0 GPF, SENSOR OPERATED CHROME PLATED FLUSHOMETER. UNIT INCLUDES – MANUAL OVERIDE BUTTON. BATTERY POWERED.	CARRIER: "J.R. SMITH" 637 SERIES	MOUNT AT HEIGHT INDICATED ON ARCHITECTURAL DRAWINGS.	1 1/2"	2"	2"	1"	3/4"	–	–
♿	L-1	**LAVATORY** WALL MOUNTED HOT AND COLD WATER ADA	"AMERICAN STANDARD" LUCERNE NO. 0355.012, WALL HUNG, VITREOUS CHINA WITH CONTOURED BACK AND SIDE SPLASH SHIELDS, FRONT OVERFLOW, WITH SOAP DEPRESSION, CONCEALED ARM RECESS, 4" CENTERS, 20" x 18" D SHAPED BOWL.	"SYMMONS" ULTRA-SENSE S-6080, SENSOR OPERATED, 4" CENTER, CHROME PLATED, LOW PROFILE, 0.5 GPM FLOW RESTRICTOR AND VANDAL RESISTANT AERATOR. INSTALL WITH IPS CONNECTIONS, FIELD SET TEMPERATURE TO RESTRICT OUTLET WATER WATER TEMPERATURE TO A MAXIMUM OF 105° F. BATTERY POWERED.	ADA COMPLIANT. LAVATORY GRID DRAIN WITH 1 1/4" OFFSET TAILPIECE, INTEGRAL PERFORATED GRID NO. 7723.018, CHROME FINISH. MOUNT P-TRAP FLUSH TO WALL.	MOUNT AT HEIGHT INDICATED ON ARCHITECTURAL DRAWINGS. PROVIDE CONCEALED ARMS AND FLOOR SUPPORT, WITH FEET OF SUPPORT SECURELY ANCHORED TO FLOOR. IN ADDITION ANCHOR TOP OF SUPPORT TO WALL CONSTRUCTION.	1 1/2"	2"	1 1/2"	3/4"	1/2"	3/4"	1/2"
♿	L-2	**LAVATORY** UNDER COUNTER HOT AND COLD WATER ADA COMPLIANT	"KOHLER" BOLERO MODEL K-2611S, UNDER COUNTER MOUNTED, STAINLESS STEEL, SATIN FINISH, 15" x 10" COUNTERTOP OPENING.	"HANSGROHE" AXOR MODEL 35002801, ADA COMPLIANT, SINGLE HOLE, STAINLESS STEEL, LEVER HANDLE LAVATORY FAUCET WITH 1.0 GPM FLOW RESTRICTOR AND VANDAL RESISTANT AERATOR. INSTALL WITH IPS CONNECTIONS, SET TEMPERATURE LIMIT STOP TO RESTRICT OUTLET WATER WATER TEMPERATURE TO A MAXIMUM OF 110° F.	ADA COMPLIANT. LAVATORY GRID DRAIN WITH 1-1/4" OFFSET TAILPIECE, INTEGRAL PERFORATED GRID NO. 7723.018, CHROME FINISH. MOUNT P-TRAP FLUSH TO WALL.	MOUNT FAUCET TO COUNTER, LOCATE AS RECOMMENDED IN INSTALLATION INSTRUCTIONS.	1 1/2"	2"	1 1/2"	3/4"	1/2"	3/4"	1/2"
♿	S-1	**SINK** COUNTER MOUNTED HOT AND COLD WATER	"ELKAY" MODEL LRADQ2219-65-BP, 19" FRONT TO BACK, 22" WIDE x 6-1/2" DEPTH OVERALL. 18 GAUGE STAINLESS STEEL, LEDGE BACK WITH SELF- RIM. PROVIDE SINGLE HOLE. PROVIDE REAR DRAIN LOCATION. PROVIDE FACTORY ADHERED VANDAL RESISTANT BACKING PLATE AT FAUCET, AND SLOT AT FAUCET FOR VANDAL RESISTANT PINS.	"T & S" MODEL B-0300-VR GOOSENECK FAUCET, 2 GPM VANDAL RESISTANT AERATOR AND RIGID/SWING FAUCET. PROVIDE VANDAL RESISTANT PIN IN FAUCET, ARRANGED TO MATE WITH SLOT IN SINK.	"ELKAY" MODEL LKAD35, OFFSET CRUMB CUP STRAINER WITH REMOVABLE BASKET AND P-TRAP. INSTALL P-TRAP FLUSH TO WALL.		1 1/2"	2"	1 1/2"	3/4"	1/2"	3/4"	1/2"
	SS-1	**SERVICE SINK** SQUARE HOT AND COLD WATER FLOOR MOUNTED	"WILLIAMS" SB 900, 24" x 24" x 12" DEEP, FLOOR-MOUNTED, TERRAZZO, WITH STAINLESS STEEL CAP ON ALL TOP SURFACES.	"CHICAGO" 540-LD897SWXF WALL MOUNTED FAUCET, VACUUM BREAKER SPOUT WITH PAIL HOOK AND ADJUSTABLE TOP BRACE, T-35 HOSE AND WALL BRACKET AND T-40 STAINLESS STEEL MOP HANGER, WITH 3 SPRING LOADED RUBBER GRIPS. PROVIDE STAINLESS STEEL BACK PANELS.	PROVIDE CAST IRON VENTED P-TRAP. PROVIDE WATER HAMMER ARRESTORS.	AS PART OF ROUGH-IN FOR FAUCET, PROVIDE SUITABLE BLOCKING FOR TOP BRACE.	2"	3"	3"	3/4"	3/4"	3/4"	3/4"
	HB	**HOSE BIBB**	"ACORN" MODEL 8121 – INTERIOR WALL MOUNTED. "ACORN" MODEL 8102 – EXTERIOR WALL MOUNTED.				–	–	–	3/4"	3/4"	–	–
	TP	**TRAP PRIMER**	"MIFAB" MODEL M-500 SERIES	PROVIDE BALL VALVE AT EACH TP LOCATION.	MOUNT TRAP PRIMER IN SHEET METAL BOX WITH "KARP" OR EQUAL ACCESS DOOR.	SEE 1/P-3 FOR PIPING	–	–	–	–	–	–	–
	FD-1	**FLOOR DRAIN**	"ZURN" MODEL Z-415		TYPE "B" STRAINER FOR EXPOSED CONCRETE TYPE "S" STRAINER FOR TILE FLOOR TYPE "SL STRAINER FOR COMPOSITION FLOOR	PROVIDE FLASHING RING AND CLAMP AT FLOORS WITH WATER RESISTANT MEMBRANE. SET TOP OF DRAIN SLIGHTLY BELOW FLOOR TO INSURE DRAINAGE. INSTALL VENTED P-TRAP WHERE TRAP PRIMERS ARE INDICATED PROVIDE PROPER CONNECTION TO P-TRAP.	2"	2"	2"	–	–	–	–
♿	EW-1	**EMERGENCY EYE WASH** ADA	"HAWS" 7360BTWC, BARRIER-FREE, WALL MOUNTED EYE/FACE WASH WITH TAILPIECE AND TRAP. WITH MESH STRAINER, DUST COVER, PER ANSI Z358.1-2009. 16 GAUGE SS WALL BRACKET WITH 11" BOWL, FLAG LEVER ACTIVATED	INTEGRAL	INSTALL WITH VENTED P-TRAP	PROVIDE WITH OPTIONAL MIXING VALVE FOR TEMPERED WATER.	1 1/2"	2"	1 1/4"	–	–	–	1 1/4" (TEMPERED TO 85°F)
	WHA	**WATER HAMMER ARRESTER**	"ZURN" MODEL 1250			SEE FLOOR PLANS FOR SIZES	–	–	–	–	–	–	–
♿	EWC	**ELECTRIC WATER COOLER** WALL MOUNTED ADA/STANDARD	"HAWS" HWUACP8LSS, STAINLESS STEEL, WALL MOUNTED. STAINLESS STEEL BACK PANEL.	INTEGRAL	WITH P-TRAP	SURPORT SYSTEM: MODEL 6700 MOUNTING PLATE AND 6800 SUPPORT CARRIER. PROVIDE MANUFACTURER'S INTERNAL SUPPORT SYSTEM. WHERE INSTALLED ON CONCRETE OR CMU WALL, PROVIDE TWO MODEL 6700 MOUNTING PLATES AND INSTALL WITH ONE PLATE ON EACH SIDE OF WALL. SET AT HEIGHT INDICATED ON ARCHITECTURAL DRAWINGS.	1 1/2"	2"	1 1/2"	3/4"	1/2"	–	–
	RIM	**REFRIGERATOR ICE MAKER**	"WATER-"TITE" MODEL MIB-1 OR "GUY GRAY" ICE MAKER HOOK-UP, WITH 1/2" FIP INLET AND 1/4" COMPRESSION OUTLET	INTEGRAL	INTEGRAL	PROVIDE 20 GAUGE BOX AND 18 GAUGE STAINLESS STEEL FACE PLATE.	–	–	–	1/2"	1/4"	–	–
♿	SH-1	**SHOWER** SURFACE MOUNTED ADA	"ACORN" SERIES 532-ADA, SHOWER INCLUDES ADA COMPLIANT CONTROL VALVE WITH LEVER HANDLE, LEVER HANDLE DIVERTER VALVE, SOAP DISH, TWO HEADS, ADJUSTABLE SPRAY PATTERN, EACH WITH 2.5 GPM SPRAY; ADA HEAD ON 5 FOOT STAINLESS STEEL HOSE (HAND SHOWER), CONVENTIONAL HEAD AT 6'-6" ABOVE FLOOR. SOAP DISH MUST BE 38" TO 48" ABOVE FLOOR.	"ACORN" SAFTI-TROL HOT AND COLD PRESSURE BALANCING VALVE FOR 2.5 GPM.	CARRIER: "ACORN" WALL MOUNTING HARDWARE FOR STUD WALL MOUNTING. PROVIDE WATER HAMMER ARRESTOR, SIZE PER PDI.	MOUNT AT HEIGHT INDICATED ON ARCHITECTURAL DRAWINGS.	–	–	–	3/4"	1/2"	3/4"	1/2"

CONSTRUCTION DOCUMENTS

Revisions	Date

CAPITAL ENGINEERING CONSULTANTS, INC.
RANCHO CORDOVA, CALIFORNIA
BZ/JD DESIGNER/DRAFTER 110103.00 PROJECT NO.

REGISTERED PROFESSIONAL ENGINEER ★ STATE OF CALIFORNIA — JOHN LIONAKIS M-23783 EXPIRES 9/30/13 MECHANICAL
DATE SIGNED 10/19/12

JACOBS
Consultants in Architecture, Engineering, Planning, and the Environment
Sacramento Office
180 Promenade Circle, Suite 300
Sacramento, California 95834
(916) 929-3323 Fax (916) 929-1772

Subconsultant List	
DREYFUSS & BLACKFORD	3540 FOLSOM BOULEVARD, SACRAMENTO, CA 95816 (916) 453-1234
CAPITAL ENGINEERING CONSULTANTS	11020 SUN CENTER DRIVE, RANCHO CORDOVA, CA 95670 (916) 851-3500
ECOM ENGINEERING INC.	1796 TRIBUTE ROAD, SUITE 100 SACRAMENTO, CA (916) 641-5600
BUEHLER & BUEHLER ASSOCIATES	600 Q STREET, STE. 200, SACRAMENTO, CA. 95814 (916) 443-0303
W.L. BURLE ENGINEERS, PA	111 S. WALNUT STREET, GREENVILLE, MS 38702 (662) 332-2619
AQUA ENGINEERING, INC.	4803 INNOVATION DRIVE, FORT COLLINS, CO 80525 (970) 229-9668
THE SIERRA WEST GROUP, LLC	2730 GATEWAY OAKS DRIVE, STE. 110 SACRAMENTO, CA. 95833 (916) 925-4000

DEPARTMENT OF VETERANS AFFAIRS • UNITED STATES OF AMERICA

N ATIONAL
C EMETERY
A DMINISTRATION

Drawing Title	PLUMBING FIXTURE SCHEDULE
Approved: Director, Office of Construction Management	
Approved: Director, Project Management Service	
Project Title	LOUISIANA NATIONAL CEMETERY GRAVESITE EXPANSION PHASE 1B
Building Number	
Checked	
Drawn	
Location	LOUISIANA NATIONAL CEMETERY ZACHARY, LOUISIANA
Date:	OCTOBER 24, 2012
Project No.	870CM3023B
DRAWING NO.	P-2
Dwg.	134 of 150

L:\2011\110103.00\1200 Drawings\1205 AutoCAD Project Files\P-2.FM20 – October 19, 2012 – BZ – 41

PLUMBING LEGEND (CONT.)

SYMBOL	ABBREVIATION	DESCRIPTION
	HW	HOT WATER PIPING
	HWR	HOT WATER RETURN
	IW	INDIRECT WASTE
— D —	D	INDIRECT DRAIN , CONDENSATE DRAIN
— D — HT —	D, HT	INDIRECT DRAIN WITH HEAT TRACE TAPE
	(N), (E)	NEW (SHOWN BOLD/HEAVY) , EXISTING (SHOWN LIGHT)
	(OH)	OVERHEAD
— OF —	OF	OVERFLOW RAINWATER LEADER
	AN	PIPE ANCHOR
		PIPE GUIDE
		PIPE IN SLEEVE
		PITCH DOWN IN DIRECTION OF FLOW
	PT	PLUGGED TEE
	POC	POINT OF CONNECTION
	POD	POINT OF DISCONNECT
	PG	PRESSURE GAUGE
— P & TRV —	P & TRV	PRESSURE & TEMPERATURE RELIEF VALVE PIPING
	PRV	PRESSURE REDUCING VALVE
— PCD —	PCD	PUMPED CONDENSATE DRAIN
— PD —	PD	PUMP DISCHARGE LINE
— RWL —	RWL	RAINWATER LEADER
	WH	RECESSED BOX HOSE BIBB OR WALL HYDRANT
	RV or P&TRV	RELIEF VALVE OR PRESSURE & TEMPERATURE RELIEF VALVE
	RET	RETURN
	IE :	RIM ELEVATION , INVERT ELEVATION
	(R) , (D)	RISE , DROP
		RISER DOWN (ELBOW)
		RISER UP (ELBOW)
	R , D	RISE OR DROP
	SS, W	SOIL, WASTE OR SANITARY SEWER (NEW)
	SS, W	SOIL, WASTE OR SANITARY SEWER (EXISTING)
		SOLENOID VALVE WITH MOTOR ACTUATOR
	STR	STRAINER
	TH	THERMOMETER
		THREE WAY CONTROL VALVE
	TP	TRAP PRIMER
— TP —		TRAP PRIMER PIPING
		TWO WAY CONTROL VALVE
	TYP	TYPICAL
	UN	UNION OR FLANGE
	AV	VALVE WITH MOTOR ACTUATOR
		VALVE IN RISER (TYPE AS INDICATED OR NOTED)
	VB	VALVE IN VALVE BOX (VALVE TYPE SYMBOL AS REQUIRED FOR VALVE TYPE USED)
	V	VENT PIPING
V , VR , VTR		VENT , VENT RISER , VENT THRU ROOF
	WCO	WALL CLEANOUT
	W	WASTE PIPING
	WHA	WATER HAMMER ARRESTER
WM	WM	WATER METER

PLUMBING LEGEND

SYMBOL	ABBREVIATION	DESCRIPTION
	ABC	ABOVE CEILING
	AFF	ABOVE FINISHED FLOOR
	AFG	ABOVE FINISHED GRADE
	(AF), (BF)	ABOVE FLOOR , BELOW FLOOR
	AD , AP	ACCESS DOOR , ACCESS PANEL
	ANV	ANGLE VALVE
	AO	AIR OUTLET
	AQ	AQUASTAT
	AD	AREA DRAIN
	BFP-RP	BACKFLOW PREVENTER, REDUCED PRESSURE
	BFF	BELOW FINISHED FLOOR
	BG	BELOW GRADE
	BV	BALL VALVE
		BRANCH – TOP CONNECTION
		BRANCH – BOTTOM CONNECTION
or		BRANCH – SIDE CONNECTION
	BFV	BUTTERFLY VALVE
	CBV	CALIBRATED BALANCE VALVE
		CAP ON END OF PIPE
	CKV	CHECK VALVE
	CP	CIRCULATING PUMP
	CW	COLD WATER
— CD —	CD	CONDENSATE DRAIN LINE
CO CO	CO	CLEANOUT
°F		DEGREES FAHRENHEIT
ø , □		DIAMETER , SQUARE (FEET)
	(D)	DROP
		EXISTING TO BE REMOVED
	EJ	EXPANSION JOINT
FF=		FINISHED FLOOR ELEVATION
FU		FIXTURE UNIT
	FC	FLEXIBLE CONNECTOR
ø	FCO	FLOOR CLEANOUT
	FD	FLOOR DRAIN
	FS	FLOOR SINK
		FLOW IN DIRECTION OF ARROW
FS	FS	FLOW SWITCH
	FV , FT	FLUSH VALVE , FLUSH TANK
	(FA) , (TA)	FROM ABOVE , TO ABOVE
	(FB) , (TB)	FROM BELOW , TO BELOW
	GSOV	GAS SHUTOFF VALVE
— G —	G	GAS – LOW PRESSURE
R	GPR	GAS PRESSURE REGULATOR
	GM	GAS METER
	GSV	GAS SEISMIC VALVE
	GV	GATE VALVE
	GPM	GALLONS PER MINUTE
ø	GCO	GRADE CLEANOUT
	HD	HOPPER DRAIN , HUB DRAIN
	HB	HOSE BIBB

PLUMBING EQUIPMENT SCHEDULE

DETAIL	UNIT	DESCRIPTION
		ADD - ALTERNATE 8
4 / P-3	EWH 1	ELECTRIC WATER HEATER "BRADFORD WHITE" LD-65R3-3, 65 GAL. CAP., 26 GPH RECOVERY AT 80°F RISE (40° - 120°F) 5 KW INPUT, 240V/1ø/60Hz, 3/4" H&CW, 3/4" T&P RELIEF, 60"H x 22" DIA., WEIGHT (FULL): 700 LBS.
2 / P-3	ET 1	DOMESTIC WATER EXPANSION TANK "WESSELS" MODEL TTA-12, WITH PRE-CHARGED DIAPHRAGM, 3.1 GAL. ACCEPTANCE VOLUME, 3/4" CW CONNECTION, SIZE: 12" DIA. x 14" H. WEIGHT (FULL): 35 LBS.
5 / P-3	CP 1	DOMESTIC WATER CIRCULATING PUMP "ARMSTRONG" MODEL ASTRO 20BU, 2 GPM AT 3' HEAD, 115V-1ø, 1/25 HP, 0.48 FLA, 3400 RPM, 1 1/4" INLET & OUTLET CONNECTIONS. OPERATING WEIGHT: 15LBS.
		BASE BID
4 / P-3	EWH 2	ELECTRIC WATER HEATER "BRADFORD WHITE" M-II-80(A)-9-3SF, 80 GAL. CAP., 47 GPH RECOVERY AT 80°F RISE (40° - 120°F) 9 KW INPUT, 208V/3ø/60Hz, 1 1/2" H&CW, 3/4" T&P RELIEF, 60"H x 26" DIA., WEIGHT (FULL): 1100 LBS.
2 / P-3	ET 2	DOMESTIC WATER EXPANSION TANK "WESSELS" MODEL TTA-12, WITH PRE-CHARGED DIAPHRAGM, 3.1 GAL. ACCEPTANCE VOLUME, 3/4" CW CONNECTION, SIZE: 12" DIA. x 14" H. WEIGHT (FULL): 35 LBS.
5 / P-3	CP 2	DOMESTIC WATER CIRCULATING PUMP "ARMSTRONG" MODEL ASTRO 20BU, 2 GPM AT 3' HEAD, 115V-1ø, 1/25 HP, 0.48 FLA, 3400 RPM, 1 1/4" INLET & OUTLET CONNECTIONS. OPERATING WEIGHT: 15LBS.

WATER PIPE SIZING

FIELD VERIFY AVAILABLE WATER PRESSURE.

WATER CALCULATION	TOTAL
AVAILABLE PRESSURE	60 PSI
PRESSURE LOSS THRU BFP-RP	11 PSI
PRESSURE LOSS DUE TO HEIGHT	5 PSI
FRICTION LOSS TO REMOTE OUTLET (TOTAL DEV. LENGTH=125 FEET)	2 PSI
NET PRESSURE AVAILABLE (60 – 11 – 5 – 2 = 42 PSI)	42 PSI
PRESSURE REQUIRED AT HIGHEST ELEVATION (WC)	25 PSI

NO BOOST REQUIRED.

PLUMBING GENERAL NOTES

(APPLY TO ALL "P" DRAWINGS)

1. THE DRAWINGS SHALL BE CONSIDERED DIAGRAMMATIC ONLY AND ARE NOT INTENDED TO SHOW EVERY OFFSET OR FITTING OR EVERY STRUCTURAL DIFFICULTY THAT MAY BE ENCOUNTERED DURING INSTALLATION OF THE WORK. LOCATION OF ALL ITEMS NOT DEFINITELY FIXED BY DIMENSIONS ARE APPROXIMATE ONLY. EXACT LOCATIONS NECESSARY TO SECURE BEST CONDITIONS AND RESULTS MUST BE DETERMINED AT THE JOB SITE AND SHALL HAVE THE APPROVAL OF THE ARCHITECT BEFORE BEING INSTALLED.
2. ALL VALVES SHOWN SHALL BE FULL LINE SIZE UNLESS OTHERWISE NOTED.
3. CLOSELY COORDINATE ALL WORK WITH OTHER TRADES PRIOR TO TRENCHING OR INSTALLATON OF NEW. IDENTIFY SIZE AND LOCATIONS OF ALL PENETRATIONS THROUGH FOUNDATIONS, WALLS OR ROOFS PRIOR TO FABRICATION OF ANY SYSTEMS OR ORDERING MATERIALS AFFECTED BY POSSIBLE COORDINATION CONFLICTS.
4. CONCRETE ANCHORS SHALL BE HILTI, KWIK BOLT TZ CARBON 1/2"ø w/3 1/2" MIN. EMBEDMENT UNLESS OTHERWISE NOTED. ANCHORS SHALL BE TESTED PER IR 19-1, INTERPRETIVE REGULATION FOR EXPANSION ANCHORS IN HARDENED CONCRETE.
5. PIPING SHALL BE SUPPORTED AND BRACED IN ACCORDANCE TO SMACNA "GUIDELINES FOR SEISMIC RESTRAINTS OF MECHANICAL AND PLUMBING PIPING SYSTEMS".
6. PENETRATION OF PIPES, CONDUITS, ETC., IN WALLS AND/OR FLOORS REQUIRING PROTECTED OPENINGS SHALL BE FIRE STOPPED. MATERIAL SHALL BE A TESTED ASSEMBLY APPROVED BY THE STATE FIRE MARSHAL.
7. ALL NEW SANITARY WASTE PIPING SHOWN SHALL BE SLOPED AT 1/4" PER FOOT MINIMUM UNLESS OTHERWISE NOTED ON PLANS. WHERE SLOPES LESS THAN 1/4" PER FOOT ARE INDICATED, CONTRACTOR SHALL SLOPE NEW PIPING UNIFORMLY BETWEEN UPPER TERMINAL OF PIPE AND THE POINT OF CONNECTION TO THE SITE PIPING (AS INDICATED ON THE CIVIL PLANS) TO ACHIEVE MAXIMUM SLOPE POSSIBLE AND IN NO CASE SHALL THE PIPING BE SLOPED LESS THAN THE MINIMUM INDICATED.
8. ACCESS PANELS SHALL BE PROVIDED AS NECESSARY TO PROPERLY ACCESS THE PLUMBING SYSTEM INCLUDING VALVES, EQUIPMENT, HOPPER DRAINS AND INDIRECT DRAINS IN WALLS.
9. OFFSET VENT THROUGH ROOF 10'-0" MINIMUM FROM AIR INTAKES AND 4'-0" FROM OUTSIDE WALLS.
10. HVAC EQUIPMENT IS SHOWN FOR THE COORDINATION OF UTILITIES ONLY. REFER TO 'H' SHEETS FOR MORE INFORMATION.
11. THE CONNECTION OF CONDENSATE DRAIN LINES TO HVAC EQUIPMENT SHALL INCLUDE A MINIMUM 2" DEEP "P"-TRAP AND PLUGGED TEE AT ALL OFFSETS.
12. PROVIDE WATER HAMMER ARRESTORS (WHA) AS INDICATED IN SPECIFICATIONS, AND ON PLANS, SIZE PER PDI.
13. FOR PIPES PASSING THROUGH, UNDER OR PARALLEL TO BUILDING FOOTINGS, RETAINING WALLS ETC. REFER TO STRUCTURAL PLANS.
14. CONTRACTOR SHALL FIELD VERIFY ALL POINTS OF CONNECTION TO SITE PIPING (LOCATIONS AND INVERT) PRIOR TO EXCAVATION, FABRICATION AND INSTALLATION OF ASSOCIATED PIPING RUNS. NOTIFY ARCHITECT AND OR ENGINEER IMMEDIATELY IF POINTS OF CONNECTION OR INVERTS ARE DIFFERENT THAN REPRESENTED ON THE DRAWINGS.
15. ALL WORK SHOWN IS NEW UNLESS OTHERWISE NOTED.
16. SEE ARCHITECTURAL DRAWINGS FOR BUILDING DIMENSIONS AND EXACT LOCATIONS OF PLUMBING FIXTURES.
17. CONCEAL ALL PIPING IN WALL FURRING, PARTITIONS, ETC., EXCEPT AT MECHANICAL ROOMS.
18. DOMESTIC HOT WATER HEATERS SHALL BE SEISMICALLY SECURED TO BUILDING STRUCTURE WITH ADEQUATE STRUCTURAL SUPPORT WITH ANCHOR BOLTS TO WITHSTAND LATERAL AND VERTICAL LOADS.
19. ALL HOSE BIBBS SHALL BE EQUIPPED WITH A BACKFLOW PREVENTION DEVICE PER LATEST EDITION OF UPC.
20. PROVIDE A TRAP PRIMER AT ALL FLOOR DRAINS AND FLOOR SINKS.
21. PROVIDE VALVES ON WATER PIPE BRANCHES TO EQUIPMENT AND PLUMBING FIXTURES. PROVIDE ACCESS PANELS WHEN LOCATED IN FURRED SPACES OR ABOVE NON-REMOVABLE CEILINGS. ALL VALVES SHALL BE FULL LINE SIZE.
22. SEAL ALL PIPE PENETRATIONS THRU FLOORS WATERTIGHT.
23. PRIOR TO ANY SOLENOID VALVE, QUIK CLOSING VALVE, ETC. PROVIDE AND INSTALL SHOCK ABSORBER OF REQUIRED SIZE.
24. REFER TO 3/P-3 FOR PIPE THRU WALL DETAIL.
25. SEE SHEET ARCHITECTURAL SHEETS 2000-1 AND 2000-2 FOR COMMITTAL SHELTER RAIN WATER LEADER PIPING. COORDINATE BELOW GRADE CONNECTIONS TO SITE STORM SYSTEM WITH CIVIL. SEE SPECIFICATION SECTION 22 14 00 FOR ADDITIONAL INFORMATION.

CONSTRUCTION DOCUMENTS

Revisions	Date

CAPITAL ENGINEERING CONSULTANTS, INC.
RANCHO CORDOVA, CALIFORNIA
BZ/JD DESIGNER/DRAFTER
11010300 PROJECT NO.

REGISTERED PROFESSIONAL ENGINEER JOHN LIONAKIS M 23783 EXPIRES 9/30/13 MECHANICAL STATE OF CALIFORNIA
DATE SIGNED: 10/19/12

JACOBS
Consultants in Architecture, Engineering, Planning, and the Environment
Sacramento Office
180 Promenade Circle, Suite 300
Sacramento, California 95834
(916) 929-3323 Fax (916) 929-1772

Subconsultant List	
DREYFUSS & BLACKFORD	3540 FOLSOM BOULEVARD, SACRAMENTO, CA 95816 (916) 453-1234
CAPITAL ENGINEERING CONSULTANTS	11020 SUN CENTER DRIVE, RANCHO CORDOVA, CA 95670 (916) 851-3500
ECOM ENGINEERING INC.	1796 TRIBUTE ROAD, SUITE 100 SACRAMENTO, CA (916) 641-5600
BUEHLER & BUEHLER ASSOCIATES	600 Q STREET, STE. 200, SACRAMENTO, CA. 95814 (916) 443-0303
W.L. BURLE ENGINEERS, PA	111 S. WALNUT STREET, GREENVILLE, MS 38702 (662) 332-2619
AQUA ENGINEERING, INC.	4803 INNOVATION DRIVE, FORT COLLINS, CO 80525 (970) 229-9668
THE SIERRA WEST GROUP, LLC	2730 GATEWAY OAKS DRIVE, STE. 110 SACRAMENTO, CA. 95833 (916) 925-4000

DEPARTMENT OF VETERANS AFFAIRS • UNITED STATES OF AMERICA

NATIONAL CEMETERY ADMINISTRATION

Drawing Title: PLUMBING LEGENDS, SCHEDULES, & NOTES

Approved: Director, Office of Construction Management [illegible]

Approved: Director, Project Management Service

Project Title: LOUISIANA NATIONAL CEMETERY GRAVESITE EXPANSION PHASE 1B

Building Number | Checked | Drawn

Location: LOUISIANA NATIONAL CEMETERY ZACHARY, LOUISIANA

Date: OCTOBER 24, 2012

Project No. 870CM3023B

DRAWING NO. P-1

Dwg. 133 of 150

QC INI %

L:\2011\110103.00\1200 Drawings\1205 AutoCAD Project Files\P-1.FM20 – October 19, 2012 – BZ – 42

GENERAL NOTES:

1. SEE FIXTURE CONNECTION SCHEDULE ON SHEET P-2 FOR PIPE SIZE TO INDIVIDUAL FIXTURES SHOWN ON PLAN UNLESS OTHERWISE NOTED.

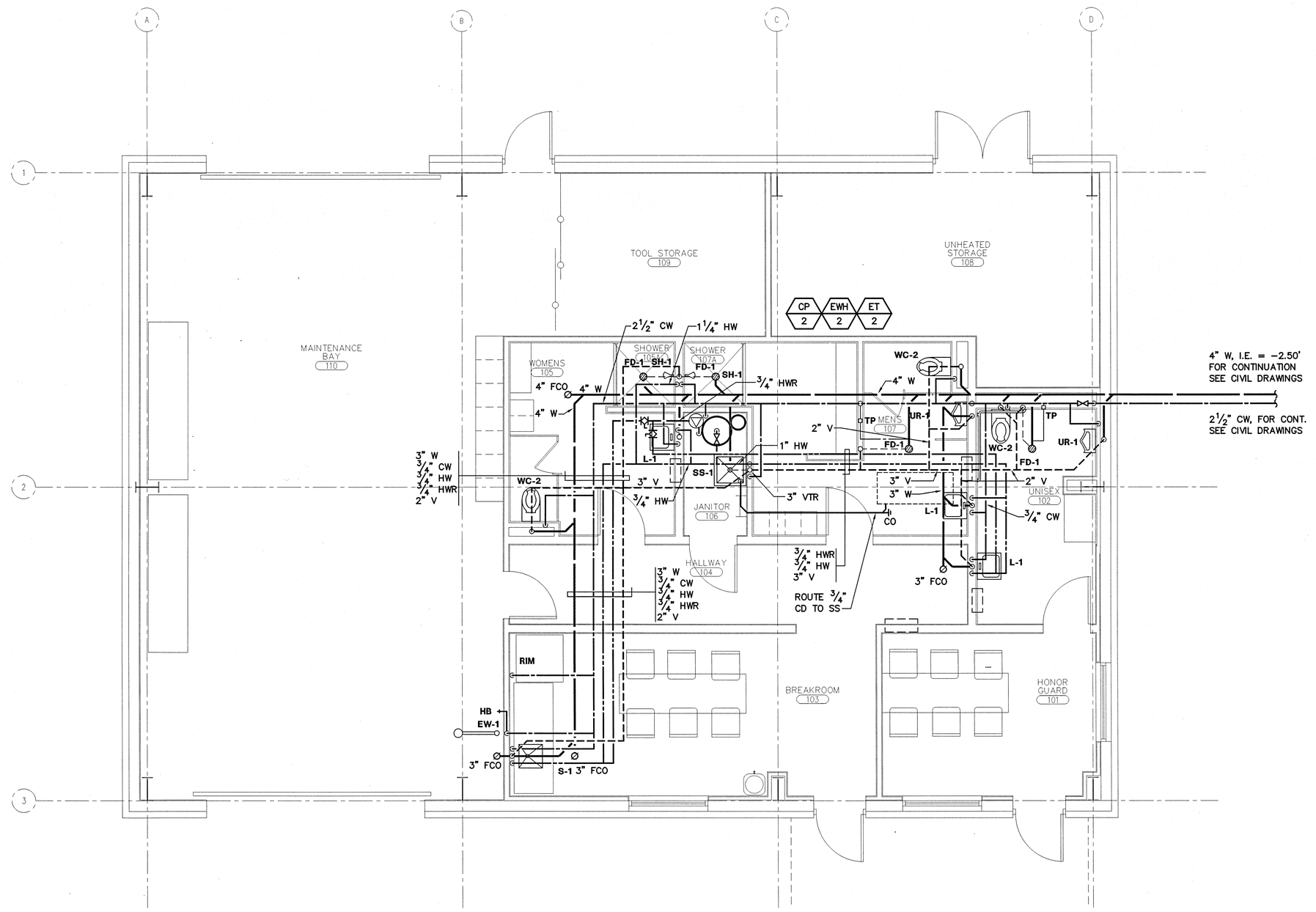

PLUMBING FLOOR PLAN - MAINTENANCE

1
3000-P1

SCALE : 1/4" = 1'-0"

N

CONSTRUCTION DOCUMENTS

Revisions	Date

CAPITAL ENGINEERING CONSULTANTS, INC.
RANCHO CORDOVA, CALIFORNIA
BZ/JD DESIGNER/DRAFTER
110103.00 PROJECT NO.

REGISTERED PROFESSIONAL ENGINEER JOHN LIGHATO M 23763 CIVIL MECHANICAL STATE OF CALIFORNIA
DATE SIGNED: 10/13/12

JACOBS
Consultants in Architecture, Engineering, Planning, and the Environment
Sacramento Office
180 Promenade Circle, Suite 300
Sacramento, California 95834
(916) 929-3323 Fax (916) 929-1772

Subconsultant List	
DREYFUSS & BLACKFORD	3540 FOLSOM BOULEVARD, SACRAMENTO, CA 95816 (916) 453-1234
CAPITAL ENGINEERING CONSULTANTS	11020 SUN CENTER DRIVE, RANCHO CORDOVA, CA 95670 (916) 851-3500
ECOM ENGINEERING INC.	1796 TRIBUTE ROAD, SUITE 100 SACRAMENTO, CA (916) 641-5600
BUEHLER & BUEHLER ASSOCIATES	600 Q STREET, STE. 200, SACRAMENTO, CA. 95814 (916) 443-0303
W.L. BURLE ENGINEERS, PA	111 S. WALNUT STREET, GREENVILLE, MS 38702 (662) 332-2619
AQUA ENGINEERING, INC.	4803 INNOVATION DRIVE, FORT COLLINS, CO 80525 (970) 229-9668
THE SIERRA WEST GROUP, LLC	2730 GATEWAY OAKS DRIVE, STE. 110 SACRAMENTO, CA. 95833 (916) 925-4000

NATIONAL CEMETERY ADMINISTRATION

Drawing Title	Project Title	Date:
PLUMBING FLOOR PLAN – MAINTENANCE BUILDING	LOUISIANA NATIONAL CEMETERY GRAVESITE EXPANSION PHASE 1B	OCTOBER 24, 2012
Approved: Director, Office of Construction Management	Building Number 3000 / Checked / Drawn	Project No. 870CM3023B
Approved: Director, Project Management Service	Location LOUISIANA NATIONAL CEMETERY ZACHARY, LOUISIANA	DRAWING NO. 3000-P1 Dwg. 132 Of 150

CONSTRUCTION DOCUMENTS

GENERAL NOTES:

1. SEE FIXTURE CONNECTION SCHEDULE ON SHEET P-2 FOR PIPE SIZE TO INDIVIDUAL FIXTURES SHOWN ON PLAN UNLESS OTHERWISE NOTED.

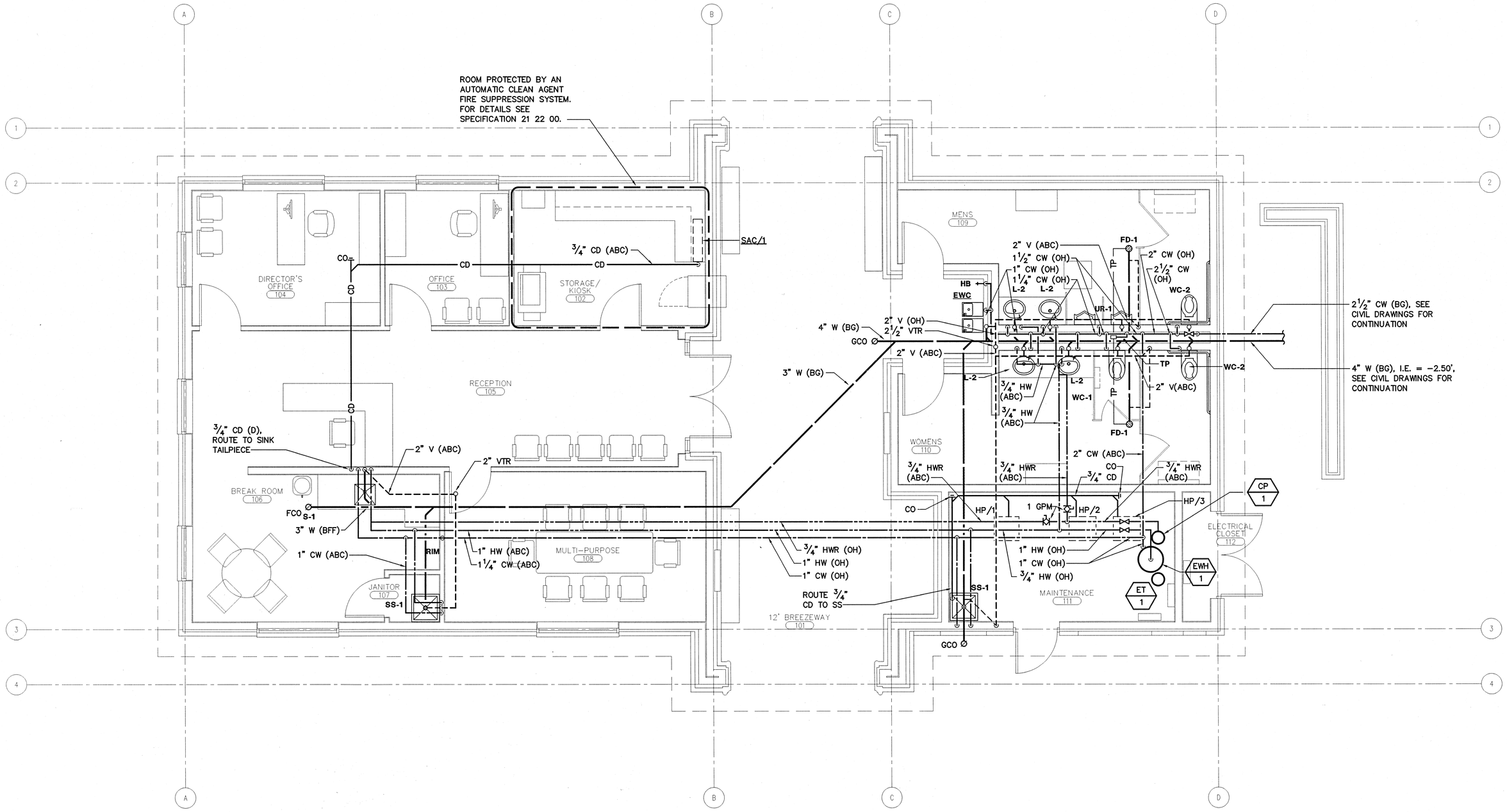

PLUMBING FLOOR PLAN - P.I.C./ADMINISTRATION (ADD - ALTERNATE 8)

1
1400-P1

SCALE : 1/4" = 1'-0"

CONSTRUCTION DOCUMENTS

Revisions	Date

CAPITAL ENGINEERING CONSULTANTS, INC.
RANCHO CORDOVA, CALIFORNIA
BZ/JD DESIGNER/DRAFTER
110103.00 PROJECT NO.

REGISTERED PROFESSIONAL ENGINEER
JOHN LIGHTON
M 23783
EXPIRES 9/30/13
MECHANICAL
STATE OF CALIFORNIA
DATE SIGNED: 10/18/12

JACOBS
Consultants in Architecture, Engineering, Planning, and the Environment
Sacramento Office
180 Promenade Circle, Suite 300
Sacramento, California 95834
(916) 929-3323 Fax (916) 929-1772

Subconsultant List	
DREYFUSS & BLACKFORD	3540 FOLSOM BOULEVARD, SACRAMENTO, CA 95816 (916) 453-1234
CAPITAL ENGINEERING CONSULTANTS	11020 SUN CENTER DRIVE, RANCHO CORDOVA, CA 95670 (916) 851-3500
ECOM ENGINEERING INC.	1796 TRIBUTE ROAD, SUITE 100 SACRAMENTO, CA (916) 641-5600
BUEHLER & BUEHLER ASSOCIATES	600 Q STREET, STE. 200, SACRAMENTO, CA. 95814 (916) 443-0303
W.L. BURLE ENGINEERS, PA	111 S. WALNUT STREET, GREENVILLE, MS 38702 (662) 332-2619
AQUA ENGINEERING, INC.	4803 INNOVATION DRIVE, FORT COLLINS, CO 80525 (970) 229-9668
THE SIERRA WEST GROUP, LLC	2730 GATEWAY OAKS DRIVE, STE. 110 SACRAMENTO, CA. 95833 (916) 925-4000

NATIONAL CEMETERY ADMINISTRATION

Drawing Title	PLUMBING FLOOR PLAN – P.I.C./ADMINISTRATION ADD – ALTERNATE #8
Approved: Director, Office of Construction Management	
Approved: Director, Project Management Service	
Project Title	LOUISIANA NATIONAL CEMETERY GRAVESITE EXPANSION PHASE 1B
Building Number	1400
Checked	
Drawn	
Location	LOUISIANA NATIONAL CEMETERY ZACHARY, LOUISIANA
Date:	OCTOBER 24, 2012
Project No.	870CM3023B
DRAWING NO.	1400-P1
Dwg.	131 Of 150

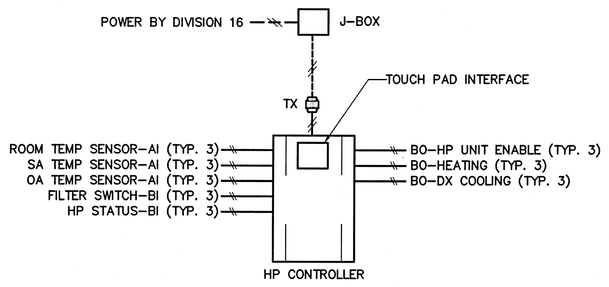

SPLIT HEAT PUMP UNIT TYPICAL CONTROL PANEL

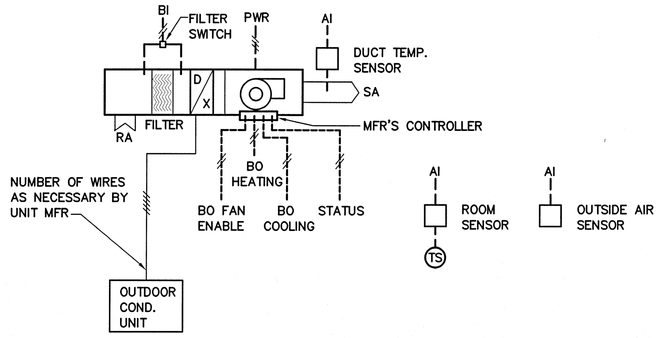

SPLIT HP UNIT TYPICAL CONTROL DIAGRAM

NOTES:
1. SEE SCHEDULES AND PLANS FOR QUANTITIES AND LOCATIONS
2. MOUNT PLENUM RATED CONTROLLER ON OR ADJACENT TO INDOOR UNIT.
3. PROVIDE CONTROL TRANSFORMERS AS REQUIRED.

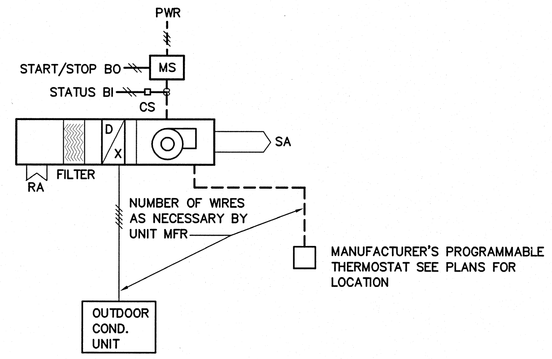

SPLIT AC UNIT (SAC-1) CONTROL DIAGRAM

NOTES:
1. SEE SCHEDULES AND PLANS FOR QUANTITIES AND LOCATIONS
2. MOUNT PLENUM RATED CONTROLLER ON OR ADJACENT TO INDOOR UNIT.
3. PROVIDE CONTROL TRANSFORMERS AS REQUIRED.

SEQUENCE OF OPERATION

AIR CONDITIONING SYSTEMS

HP UNIT CONTROL:
EACH HP UNIT SHALL BE CONTROLLED BY A DIGITAL CONTROLLER, LOCATED AT ITS RESPECTIVE UNIT. OCCUPANCY SCHEDULING FOR EACH HP UNIT SHALL BE AS DIRECTED BY THE DEPARTMENT OF VETERANS AFFAIRS TO ALLOW EACH HP UNIT TO BE ASSIGNED A SPECIFIC OPERATING SCHEDULE.

WHEN IN OPERATION, THE DX COOLING SYSTEM AND THE HEAT PUMP SHALL BE OPERATED IN SEQUENCE BY THE DIGITAL CONTROLLER TO MAINTAIN THE SPACE TEMPERATURE AS SET AT THE TEMPERATURE SENSOR. UPON A FIRST CALL FOR COOLING, THE DX COOLING SYSTEM SHALL BE OPERATED (BINARY OUTPUTS) TO MEET THE DEMAND. WHEN UPON A CALL FOR HEATING, THE HEAT PUMP SHALL BE OPERATED (BINARY OUTPUTS) TO MAINTAIN SPACE TEMPERATURE AS SET. REQUIRED MINIMUM OUTSIDE AIR FOR VENTILATION, AS SCHEDULED, SHALL BE DETERMINED AT THE TIME OF SYSTEM START-UP BY THE AIR BALANCING CONTRACTOR.

ALL CONTROL SETTINGS TO BE ADJUSTABLE THROUGH THE TOUCH PAD INTERFACE.

OPTIMUM START-STOP:
OPERATION OF AIR CONDITIONING EQUIPMENT SHALL BE INITIATED AT THE MOST ECONOMICAL TIME TO ACHIEVE THE PROGRAMMED SPACE TEMPERATURE IN THE CONTROLLED SPACE JUST AT THE TIME OF SCHEDULED OCCUPANCY EACH DAY. THIS SHALL BE ACCOMPLISHED, WHEN NECESSARY, BY OPERATING THE AC UNITS EITHER IN THE MORNING WARM-UP MODE OR THE MORNING PRE-COOL MODE PRIOR TO THE TIME OF OCCUPANCY. THE DIGITAL CONTROLLER SYSTEM SHALL MONITOR THE OUTSIDE AIR TEMPERATURE AND SELECTED INTERIOR SPACE TEMPERATURES AT 5:00 AM EACH DAY WHERE SCHEDULED OCCUPANCY IS TO OCCUR AND BASED ON THE RELATIONSHIP OF THOSE TEMPERATURES, INITIATE EITHER A MORNIING WARMUP OR PRE-COOL PROCEDURE SEQUENCE.

MORNING WARMUP:
THE HP UNIT SHALL BE OPERATED WITH THE DX COOLING SYSTEM DISABLED AND THE HEAT PUMP SYSTEM IN OPERATION.

MORNING PRE-COOL:
THE HP UNIT SHALL BE OPERATED WITH THE HEAT PUMP SYSTEM DISABLED AND THE DX COOLING SYSTEM IN OPERATION.

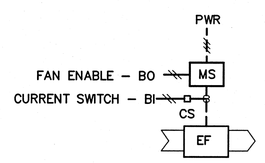

EXHAUST FAN CONTROL SCHEDULE	
EF-1	INTERLOCK W/ HP-2 & HP-3
EF-2	THERMOSTAT SWITCH SET AT 85°F
EF-3	SWITCH WITH LIGHTS & INTERLOCK WITH HP-1

EXHAUST FAN CONTROL DIAGRAMS

NOTES:
1. SEE SCHEDULES AND PLANS FOR QUANITIES AND LOCATIONS
2. FOR SINGLE PHASE EXHAUST FANS, PROVIDE START / STOP RELAY SIZED FOR EXHAUST FAN HORSEPOWER RATING.

CONSTRUCTION DOCUMENTS

Revisions	Date

CAPITAL ENGINEERING CONSULTANTS, INC.
RANCHO CORDOVA, CALIFORNIA
BZ/JD DESIGNER/DRAFTER 11013.00 PROJECT NO.

REGISTERED PROFESSIONAL ENGINEER — JOHN L. LIOCKO — M 23763 — EXPIRES 6/30/13 — MECHANICAL — STATE OF CALIFORNIA
DATE SIGNED 10/19/12

JACOBS
Consultants in Architecture, Engineering, Planning, and the Environment
Sacramento Office
180 Promenade Circle, Suite 300
Sacramento, California 95834
(916) 929-3323 Fax (916) 929-1772

Subconsultant List	
DREYFUSS & BLACKFORD	3540 FOLSOM BOULEVARD, SACRAMENTO, CA 95816 (916) 453-1234
CAPITAL ENGINEERING CONSULTANTS	11020 SUN CENTER DRIVE, RANCHO CORDOVA, CA 95670 (916) 851-3500
ECOM ENGINEERING INC.	1796 TRIBUTE ROAD, SUITE 100 SACRAMENTO, CA (916) 641-5600
BUEHLER & BUEHLER ASSOCIATES	600 Q STREET, STE. 200, SACRAMENTO, CA. 95814 (916) 443-0303
W.L. BURLE ENGINEERS, PA	111 S. WALNUT STREET, GREENVILLE, MS 38702 (662) 332-2619
AQUA ENGINEERING, INC.	4803 INNOVATION DRIVE, FORT COLLINS, CO 80525 (970) 229-9668
THE SIERRA WEST GROUP, LLC	2730 GATEWAY OAKS DRIVE, STE. 110 SACRAMENTO, CA. 95833 (916) 925-4000

NATIONAL CEMETERY ADMINISTRATION

Drawing Title: HVAC CONTROLS
Approved: Director, Office of Construction Management
Approved: Director, Project Management Service

Project Title: LOUISIANA NATIONAL CEMETERY GRAVESITE EXPANSION PHASE 1B
Building Number | Checked | Drawn
Location: LOUISIANA NATIONAL CEMETERY ZACHARY, LOUISIANA

Date: OCTOBER 24, 2012
Project No. 870CM3023B
DRAWING NO. H-4
Dwg. 130 Of 150

CONSTRUCTION DOCUMENTS

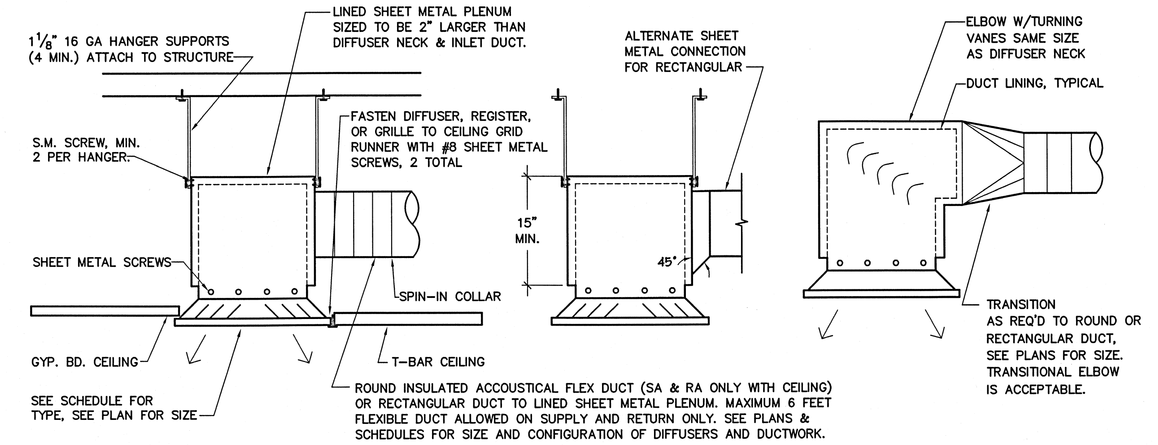

NOTE: FLEXIBLE DUCTWORK IS NOT ALLOWED TO ANY EXHAUST AIR REGISTER OR GRILLE. FLEX DUCT IS NOT ALLOWED ON ANY TYPE OF DIFFUSER, REGISTER, OR GRILLE IN EXPOSED AREAS WITHOUT CEILINGS.

RETURN, EXHAUST & SUPPLY REGISTER DETAIL

3 / H-3

SCALE : NONE

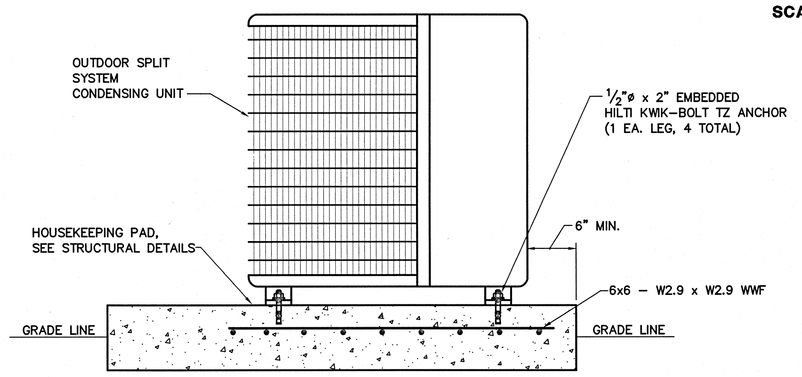

CONDENSING UNIT GRADE MOUNTING

9 / H-3

SCALE : NONE

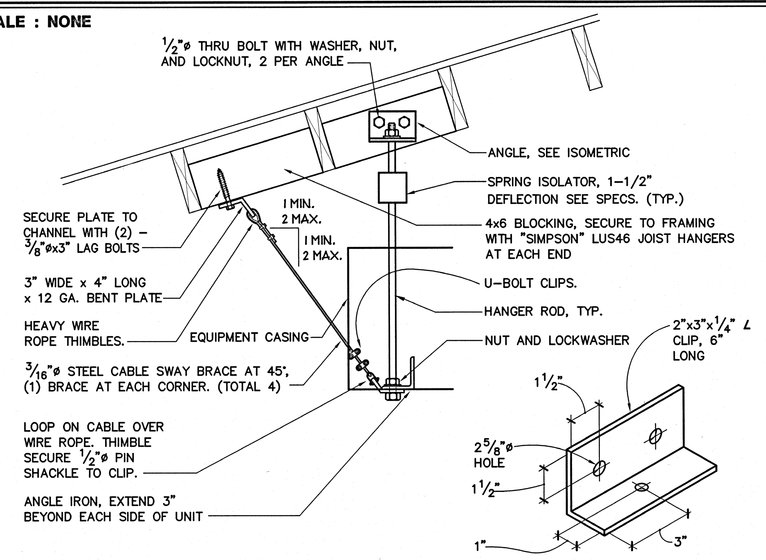

INDOOR EQUIPMENT MOUNTING

6 / H-3

SCALE : NONE

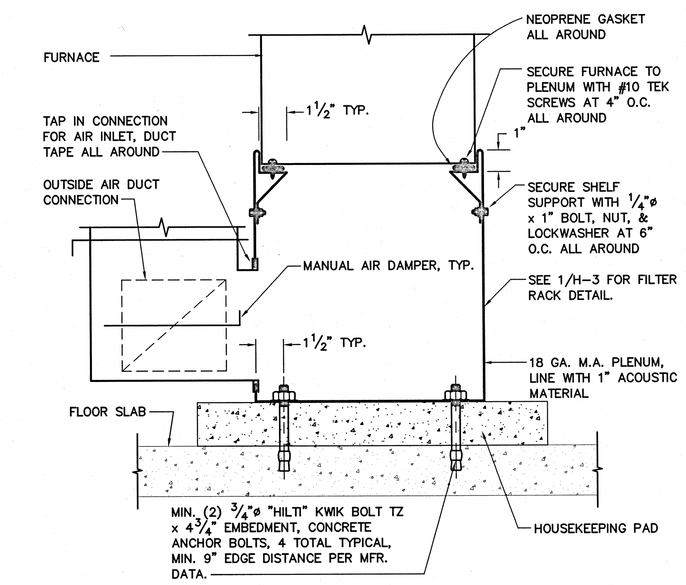

HEAT PUMP MTG. AT CONCRETE FLOOR

2 / H-3

SCALE : NONE

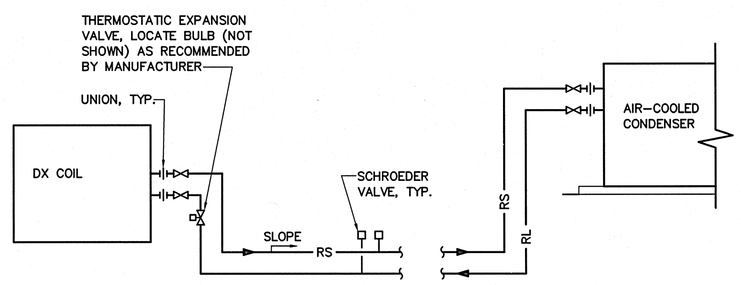

NOTES:

1. INSTALL REFRIGERANT PIPING IN STRICT ACCORDANCE WITH MANUFACTURER'S LONG LINE REFRIGERANT INSTALLATION GUIDE LINES WHERE APPLICABLE.
2. FURNISH EACH UNIT WITH: THERMOSTATIC EXPANSION VALVE, LIQUID LINE SOLENOID VALVE, LIQUID LINE FILTER, START RELAY AND CAPACITOR, OUTDOOR UNIT TIME DELAY RELAY, CRANKCASE HEATER AND SUCTION ACCUMULATOR AT COMPRESSOR – ALL ACCESSORIES TO BE FACTORY SUPPLIED ON OUTDOOR UNIT.
3. PROVIDE HARD COPPER REFRIGERANT PIPING AND FITTINGS AS PER MECH. SPECIFICATIONS.
4. SEE PLANS FOR SIZES.

REFRIGERANT LINE PIPING DIAGRAM

8 / H-3

SCALE : NONE

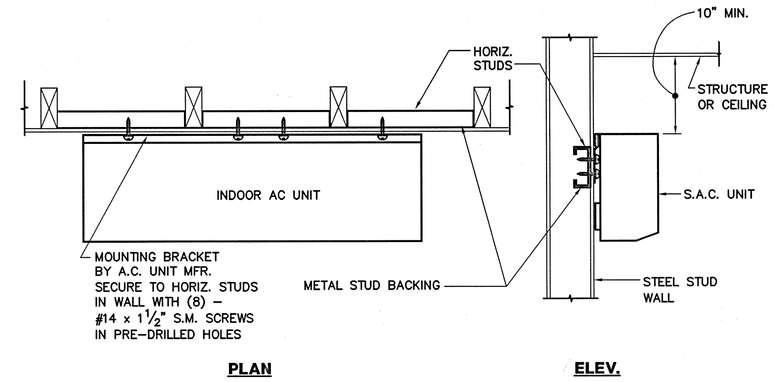

INDOOR UNIT WALL MOUNTING

5 / H-3

SCALE : NONE

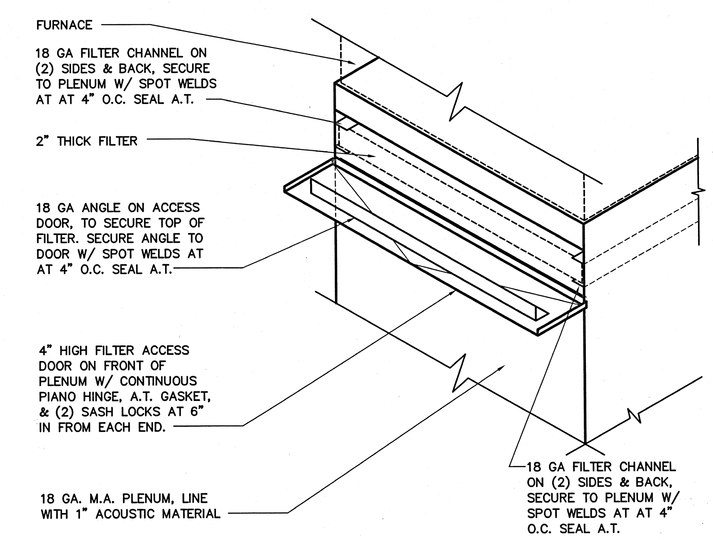

FILTER RACK DETAIL

1 / H-3

SCALE : NONE

NOTE :

SPLITTER DAMPERS SHALL BE USED AT ALL MAJOR DUCT TAKE-OFFS.

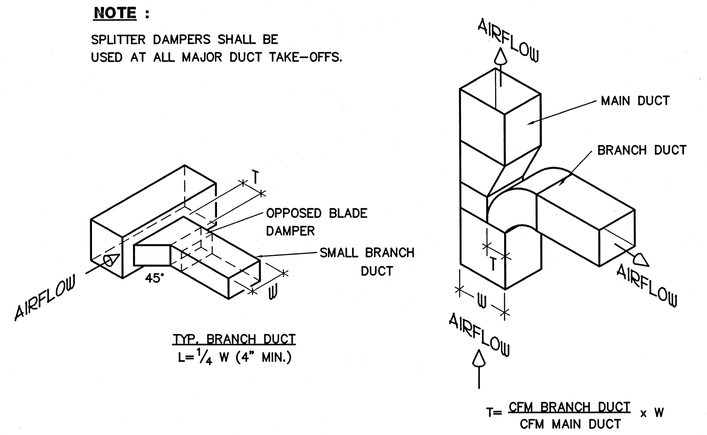

BRANCH DUCT TAKE-OFFS

7 / H-3

SCALE : NONE

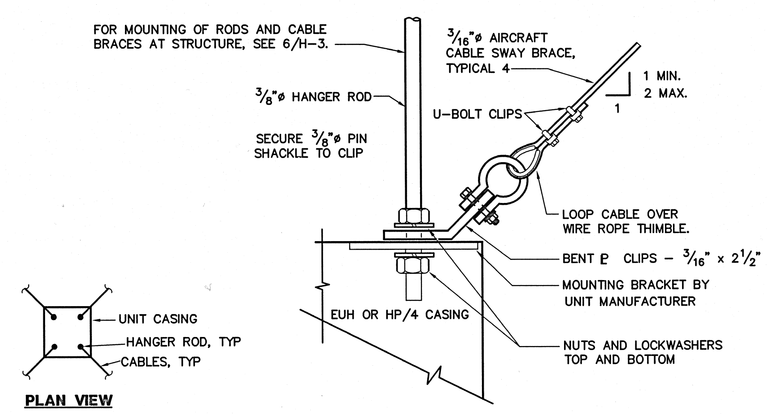

TOP ATTACHMENT EQUIP. MOUNTING

4 / H-3

SCALE : NONE

CONSTRUCTION DOCUMENTS

Revisions	Date

CAPITAL ENGINEERING CONSULTANTS, INC.
RANCHO CORDOVA, CALIFORNIA
BZ/JD DESIGNER/DRAFTER
10103.00 PROJECT NO.
REGISTERED PROFESSIONAL ENGINEER — JOHN LOCKE — CM 23783 — EXPIRES 9/30/13 — STATE OF CALIFORNIA
DATE SIGNED: 10/18/12

JACOBS
Consultants in Architecture, Engineering, Planning, and the Environment
Sacramento Office
180 Promenade Circle, Suite 300
Sacramento, California 95834
(916) 929-3323 Fax (916) 929-1772

Subconsultant List		
DREYFUSS & BLACKFORD	3540 FOLSOM BOULEVARD, SACRAMENTO, CA 95816	(916) 453-1234
CAPITAL ENGINEERING CONSULTANTS	11020 SUN CENTER DRIVE, RANCHO CORDOVA, CA 95670	(916) 851-3500
ECOM ENGINEERING INC.	1796 TRIBUTE ROAD, SUITE 100 SACRAMENTO, CA	(916) 641-5600
BUEHLER & BUEHLER ASSOCIATES	600 Q STREET, STE. 200, SACRAMENTO, CA. 95814	(916) 443-0303
W.L. BURLE ENGINEERS, PA	111 S. WALNUT STREET, GREENVILLE, MS 38702	(662) 332-2619
AQUA ENGINEERING, INC.	4803 INNOVATION DRIVE, FORT COLLINS, CO 80525	(970) 229-9668
THE SIERRA WEST GROUP, LLC	2730 GATEWAY OAKS DRIVE, STE. 110 SACRAMENTO, CA.	95833 (916) 925-4000

NATIONAL CEMETERY ADMINISTRATION

Drawing Title	Project Title	Date:
HVAC DETAILS	LOUISIANA NATIONAL CEMETERY GRAVESITE EXPANSION PHASE 1B	OCTOBER 24, 2012
Approved: Director, Office of Construction Management	Building Number / Checked / Drawn	Project No. 870CM3023B
Approved: Director, Project Management Service	Location: LOUISIANA NATIONAL CEMETERY ZACHARY, LOUISIANA	DRAWING NO. H-3
		Dwg. 129 of 150

L:\2011\10103.00\1200 Drawings\1203 AutoCAD Project Files\H-3.PLTD – October 19, 2012 – 82 – 40

SPLIT SYSTEM HP UNIT SCHEDULE

UNIT	LOCATION	"TRANE" MODEL NO. (INDOOR UNIT)	CFM	OSA CFM	ESP (IN. W.G.)	EDB/ EWB (DEG F)	FAN HP (WATTS)	FAN FLA	MCA	VOLT/PH	OPER. WT. (LBS.)	MOUNTING DETAIL	UNIT	"TRANE" MODEL NO. (OUTDOOR UNIT)	SENSIBLE COOLING CAPACITY (MBH)	TOTAL COOLING CAPACITY (MBH)	HEATING CAPACITY (MBH)	REFRIGERANT LINE SIZE	COMPRESSOR RLA	COMPRESSOR LRA	MCA	MOCP	FAN FLA	VOLT/PH	SEER (EER)	COP	OPER. WT. (LBS.)	MOUNTING DETAIL	CONTROL DIAGRAM	NOTES
ADD - ALTERNATE 8																														
HP 1	BREAK ROOM/MULTI-PURPOSE 106,108	2TEC3F36	900	350	0.70	94/77	1/3	2.2	3.0	230/1ø	175	2 H-3	CU 1	2TWB3036	25.0	35.0	35.0	7/8" RS 3/8" RL	14.7	87	20	30	1 @ 1.3	230/1ø	13.0	3.3	350	9 H-3	– H-4	1, 2
HP 2	RECEPTION/WOMENS 105,110	2TEC3F24	750	150	0.30	94/77	1/3	2.2	3.0	230/1ø	175	2 H-3	CU 2	2TWB3024	16.7	24.0	22.4	3/8" RS 5/16" RL	10.9	60	15	25	1 @ 0.7	230/1ø	13.0	3.3	250	9 H-3	– H-4	1, 2
HP 3	DIRECTOR'S OFFICE/MENS 104,109	2TEC3F36	900	325	0.70	94/77	1/3	2.2	3.0	230/1ø	175	2 H-3	CU 3	2TWB3036	25.0	35.0	35.0	7/8" RS 3/8" RL	14.7	87	20	30	1 @ 1.3	230/1ø	13.0	3.3	350	9 H-3	– H-4	1, 2
BASE BID																														
HP 4	MAINTENANCE BUILDING ABOVE CEILING	2TEC3F60	1650	650	0.70	94/77	1	7.6	9.5	208/1ø	250	4 H-3	CU 4	2TWB3060	43.0	57.0	43.0	7/8" RS 3/8" RL	25.9	141	34	50	1 @ 1.4	208/1ø	13.0	3.4	375	9 H-3	– H-4	1

NOTES:
1. PROVIDE WITH PROGRAMMABLE THERMOSTAT.
2. INTERLOCK WITH EF-1
3. INTERLOCK WITH EF-3

SPLIT SYSTEM AC UNIT SCHEDULE

UNIT	LOCATION	"CARRIER" MODEL NO. (INDOOR UNIT)	CFM	OSA CFM	ESP (IN. W.G.)	EDB/ EWB (DEG F)	FAN HP (WATTS)	FAN FLA	VOLT/PH	OPER. WT. (LBS.)	MOUNTING DETAIL	UNIT	"CARRIER" MODEL NO. (OUTDOOR UNIT)	SENSIBLE COOLING CAPACITY (MBH)	TOTAL COOLING CAPACITY (MBH)	TOTAL HEATING CAPACITY (MBH)	REFRIGERANT LINE SIZE	COMPRESSOR RLA	COMPRESSOR LRA	MCA	MOCP	FAN FLA	VOLT/PH	SEER (EER)	OPER. WT. (LBS.)	MOUNTING DETAIL	CONTROL DIAGRAM	NOTES
ADD - ALTERNATE 8																												
SAC 1	STORAGE/KIOSK/OFFICE ROOM 102	40MVQ012	450	–	–	80/67	(25)	1.18	230/1ø	35	5 H-3	SCU 1	38MVQ012	11.5	11.5	11.5	1/2" RS 1/4" RL	5.2	21.0	9.0	15	1 @ 0.38	230/1ø	13.0	75	9 H-3	– H-4	1, 2, 3

NOTES:
1. PROVIDE WITH FACTORY CONDENSATE PUMP.
2. ADD 0.1 OUNCE OF REFRIGERANT PER FOOT OF REFRIGERANT PIPING OVER 25' LENGTH.
3. PROVIDE WITH FACTORY CRANK CASE HEATER.

ELECTRIC UNIT HEATER SCHEDULE

UNIT	LOCATION	"REZNOR" MODEL NO.	CFM	UNIT CAPACITY (MBH)	ELECTRICAL DATA VOLT/PH	RPM	INPUT	MCA	HP	OPER. WT. (LBS.)	MOUNTING DETAIL	NOTES
BASE BID												
EUH 1	MAINTENANCE BLDG MAINTENANCE BAY 110	EGEA-2	410	2.6 KW	208/1ø	1650	2.6 KW	13.1	1/40	50	4 H-3	1
EUH 2	MAINTENANCE BLDG MAINTENANCE BAY 110	EGEA-2	410	2.6 KW	208/1ø	1650	2.6 KW	13.1	1/40	50	4 H-3	1
EUH 3	MAINTENANCE BLDG MAINTENANCE BAY 110	EGEA-2	410	2.6 KW	208/1ø	1650	2.6 KW	13.1	1/40	50	4 H-3	1
EUH 4	MAINTENANCE BLDG MAINTENANCE BAY 110	EGEA-2	410	2.6 KW	208/1ø	1650	2.6 KW	13.1	1/40	50	4 H-3	1

NOTES:
1. PROVIDE WITH MANUFACTURER'S WALL THERMOSTAT.

EXHAUST FAN SCHEDULE

SYMBOL	LOCATION	AREA SERVED	MODEL *GREENHECK* UNLESS OTHERWISE NOTED	CFM	S.P. (IN.WG.)	HP	RPM-NOISE (SONES)	VOLTAGE	WEIGHT (LBS.)	REMARKS
ADD - ALTERNATE 8										
EF 1	ADMIN/PIC	RESTROOMS 109/112/113	BSQ-100-4	825	0.25	1/4"	1192 8.8	115v/1ø	100	1, 2, 4
EF 2	ADMIN/PIC	ELECTRICAL CLOSET ROOM 111	BSQ-80-4	400	0.15	1/4"	1135 8.6	115v/1ø	100	1, 2, 3
BASE BID										
EF 3	MAINTENANCE	RESTROOMS/JANITOR 109/107	BSQ-100-4	650	0.25	1/4"	1031 7.4	115v/1ø	100	1, 2, 5
EF 4	MAINTENANCE	UNHEATED STORAGE 112	BSQ-100-4	450	0.15	1/4"	1241 9.5	115v/1ø	100	1, 2, 3

NOTES :

1. FOR MOUNTING SEE DETAIL SHEET 6/H-3
2. NOISE CRITERIA BASED ON SOUND RATING PER AMCA STANDARD 301. SOUND VALUE DETERMINED 5'-0" FROM FAN INLET. SONE VALUES (OVERALL) LISTED.
3. PROVIDE THERMOSTAT SWITCH SET AT 85°F.
4. SWITCH WITH LIGHTS AND INTERLOCK WITH HP-1, HP-2, & HP-3.
5. SWITCH WITH LIGHTS AND INTERLOCK WITH HP-4.

CONSTRUCTION DOCUMENTS

CONSTRUCTION DOCUMENTS

Revisions | Date

CAPITAL ENGINEERING CONSULTANTS, INC.
RANCHO CORDOVA, CALIFORNIA
BZ/JD DESIGNER/DRAFTER 110103.00 PROJECT NO.
DATE SIGNED 10/24/12
REGISTERED PROFESSIONAL ENGINEER JOHN LIONAKIS No. 23785 EXPIRES 6/30/13 STATE OF CALIFORNIA

JACOBS
Consultants in Architecture, Engineering, Planning, and the Environment
Sacramento Office
180 Promenade Circle, Suite 300
Sacramento, California 95834
(916) 929-3323 Fax (916) 929-1772

Subconsultant List

DREYFUSS & BLACKFORD	3540 FOLSOM BOULEVARD, SACRAMENTO, CA 95816 (916) 453-1234
CAPITAL ENGINEERING CONSULTANTS	11020 SUN CENTER DRIVE, RANCHO CORDOVA, CA 95670 (916) 851-3500
ECOM ENGINEERING INC.	1796 TRIBUTE ROAD, SUITE 100 SACRAMENTO, CA (916) 641-5600
BUEHLER & BUEHLER ASSOCIATES	600 Q STREET, STE. 200, SACRAMENTO, CA. 95814 (916) 443-0303
W.L. BURLE ENGINEERS, PA	111 S. WALNUT STREET, GREENVILLE, MS 38702 (662) 332-2619
AQUA ENGINEERING, INC.	4803 INNOVATION DRIVE, FORT COLLINS, CO 80525 (970) 229-9668
THE SIERRA WEST GROUP, LLC	2730 GATEWAY OAKS DRIVE, STE. 110 SACRAMENTO, CA. 95833 (916) 925-4000

NATIONAL CEMETERY ADMINISTRATION

Drawing Title: HVAC EQUIPMENT SCHEDULES

Project Title: LOUISIANA NATIONAL CEMETERY GRAVESITE EXPANSION PHASE 1B

Date: OCTOBER 24, 2012

Project No. 870CM3023B

Approved: Director, Office of Construction Management

Building Number | Checked | Drawn

Approved: Director, Project Management Service

Location: LOUISIANA NATIONAL CEMETERY ZACHARY, LOUISIANA

DRAWING NO. H-2

Dwg. 128 of 150

L:\2011\110103.00\1200 Drawings\1205 AutoCAD Project Files\H-2.DWG - October 19, 2012 - BZ - 41

DIFFUSER, REGISTER & GRILLE SCHEDULE

SYMBOL	DESCRIPTION	TITUS	PRICE	METALAIR	KRUEGER
CD	MODULAR CORE SURFACE MOUNT CEILING DIFFUSER FLAT FRAME	MCD – BORDER TYPE 1	SMCD–FRAME1	9000–1	1240 FRAME 22
CDL	MODULAR CORE LAY–IN CEILING DIFFUSER FOR T–BAR CEILING 24x24 PANEL	MCD – BORDER TYPE 3	SMCD–FRAME 3P	9000–6P	1240 FRAME 23
CR, CE	CEILING RETURN WITH 1/2" EGG CRATE CORE SURFACE MOUNT	MODEL 50 F – BORDER TYPE 1	80	CC5D	EGC–5
CRL, CEL	CEILING RETURN WITH 1/2" EGG CRATE CORE IN 24x24 PANEL FOR T–BAR CEILING	MODEL 50 F – BORDER TYPE 3	80 – TBP	CC5D–TBD	EGC–5TB
S	DOUBLE DEFLECTION SUPPLY GRILLE WITH VERTICAL FRONT BARS, 3/4" SPACING	300 RS	520 S	V 4004 S	880 V
R & E *	RETURN OR EXHAUST GRILLE WITH 35° OR 45° HORIZONTAL BARS.	350 RL	530L	SRH	S 80 H

NOTES:
1. ALL SYMBOLS NOTED MAY NOT BE USED. REFER TO PLANS FOR SIZE AND QUANTITY.
2. ALL SUPPLY AIR DIFFUSERS ARE 4 WAY BLOW UNLESS SHOWN OTHERWISE.
3. FURNISH ALL PRODUCTS OF A SINGLE MANUFACTURER.
4. COORDINATE DIFFUSER TYPE WITH REFLECTED CEILING PLAN.
5. OPPOSED BLADE DAMPERS ARE NOT REQUIRED AT DIFFUSERS, REGISTERS OR GRILLES UNLESS OTHERWISE NOTED.
6. PROVIDE MANUAL AIR DAMPERS AT EACH BRANCH DUCT TO A SINGLE DIFFUSER, REGISTER OR GRILLE.

* PROVIDE ALUMINUM GRILLES IN SHOWERS & DAMP AREAS.

TABLE OF BRANCH DUCT (SA, RA, EA) SIZES TO INDIVIDUAL DIFFUSERS, GRILLES, & REGISTERS

CFM	DUCT SIZE (INCHES) ①			MIN. AREA (SQ. IN.) ②	REMARKS ③
	ROUND	SQUARE	RECTANGULAR		
0–210	8ø	8x8	8x6	48	8x8 MIN ON RA & EA
211–380	10ø	10x10	10x8	80	
381–600	12ø	12x12	12x10, 16x8	120	
601–900	14ø	14x14	14x12, 16x10, 20x8	160	
901–1300	16ø	16x16	16x14, 18x12, 22x10	220	
1301–1800	18ø	18x18	18x16, 20x14, 22x12	264	
1801–2400	20ø	20x20	22x16, 24x14, 30x12	340	

NOTES:
① SIZE OF BRANCH DUCT IF SHOWN ON PLANS OR FROM ABOVE TABLE IS NOT THE INLET SIZE TO DIFFUSER, GRILLE OR REGISTER.
② MINIMUM DUCT AREA TO BE USED FOR ALTERNATE DUCT SIZES (DIFFERENT THAN THIS TABLE) WHEN REQUESTED BY CONTRACTOR FOR SA, RA, AND EA.
③ ALL DUCT SIZES SHALL BE SHOWN CLEARLY ON THE CONTRACTOR'S SUBMITTAL DRAWINGS. SHOW SIZE OF EACH DUCT ON THE PLANS AT EACH DUCT LOCATION.

MECHANICAL GENERAL NOTES

1. ALL WORK SHALL COMPLY WITH ALL APPLICABLE CODES, SPECIFICATIONS, LOCAL ORDINANCES AND INDUSTRY STANDARDS.
2. COORDINATE EXACT LOCATION OF EQUIPMENT AND ALL PENETRATIONS THROUGH WALLS & ROOFS WITH ARCHITECTURAL DRAWINGS AND STRUCTURAL COMPONENTS PRIOR TO COMMENCING WORK.
3. COORDINATE EXACT SIZE AND ROUTING OF DUCTWORK AND PIPING ON THE JOB PRIOR TO FABRICATION AND INSTALLATION WITH ARCHITECTURAL, STRUCTURAL, PLUMBING, AND ELECTRICAL. NOT ALL RISES AND DROPS ARE SHOWN. PROVIDE AS REQUIRED TO ACCOMMODATE STRUCTURE AND EXISTING CONDITIONS. HOLD ALL PIPING AS HIGH AS POSSIBLE UNLESS OTHERWISE INDICATED.
4. PROVIDE AND INSTALL MANUAL AIR DAMPERS AT ALL DUCT BRANCH TAKEOFFS TO A SINGLE SUPPLY DIFFUSER/REGISTER OR FROM A SINGLE RETURN OR EXHAUST REGISTER/GRILLE.
5. SEE ARCHITECTURAL FOR SEALING ROOF PENETRATIONS.
6. ALL WORK SHOWN IS NEW UNLESS NOTED OTHERWISE. CAREFULLY COORDINATE CONNECTION OF NEW WORK TO EXISTING WORK.
7. USE OF FLEX DUCT SHALL BE LIMITED TO LAY IN CEILING DIFFUSERS ONLY AND NOT EXCEED 7 FEET IN LENGTH.
8. PENETRATIONS OF RATED FIRE ASSEMBLIES SHALL BE FIRESTOPPED. FIRE–STOPPING SHALL BE OF AN APPROVED MATERIAL AS PRESCRIBED IN THE STATE FIRE MARSHAL STANDARDS.
9. PROVIDE COORDINATED & DIMENSIONED SHOP DRAWINGS FOR REVIEW PRIOR TO FABRICATION OR INSTALLATION.
10. FIRE DAMPERS AND COMBINATION FIRE/SMOKE DAMPERS SHALL BE PROVIDED AS REQUIRED BY 2001 UBC.
11. ALL WALL AND ROOF OPENINGS SHALL BE IDENTIFIED ON SHOP DRAWINGS AND COORDINATED WITH STRUCTURAL REQUIREMENT.
12. SHOW ALL LOCATIONS OF ROOF PENETRATIONS & ROOF MOUNTED EQUIPMENT ON SHOP DRAWINGS, SUBMIT FOR APPROVAL BY THE OWNER'S REPRESENTATIVE.
13. FIRE DAMPERS SHALL BE INSTALLED STRICTLY IN ACCORDANCE WITH THE MANUFACTURER'S REQUIREMENTS. MANUFACTURER'S INSTRUCTIONS SHALL BE MADE AVAILABLE TO THE OWNER'S REPRESENTATIVE.
14. SEE 3/H–3 FOR REGISTER DETAILS.
15. SEE 7/H–3 FOR BRANCH DUCT TAKE–OFFS.

DUCT LEGEND

SINGLE LINE SYMBOL	DOUBLE LINE SYMBOL	DESCRIPTION
24x12	24x12	RECTANGULAR DUCT – WIDTH x DEPTH (PLAN VIEW) DEPTH x WIDTH (SECTION VIEW)
26x14L	26x14L	ACOUSTICALLY LINED RECTANGULAR DUCT–DIMENSIONS ARE OUTSIDE DIMENSION (BASED ON 2" INSULATION, R–8 MIN)
		MANUAL AIR DAMPER
R OR D	RISE OR DROP	RISE OR DROP DUCT IN DIRECTION OF AIR FLOW
	OR	RECTANGULAR TO RECTANGULAR TRANSISTION , MAX. SLOPE OF 1:3 RECTANGULAR TO ROUND TRANSITION , MAX. SLOPE OF 1:3
	W, R, R/W = 1.5	ELBOW, RECTANGULAR, SMOOTH RADIUS, WITHOUT TURNING VANES
		SQUARE/RECTANGULAR DUCT ELBOW WITH TURNING VANES
		CONVERGING OR DIVERGING TEE, 45° ENTRY, RECTANGULAR MAIN AND BRANCH. WHEN REDUCING MAIN, SIDE OF TAKE OFF OR ENTRY BRANCH TO BE FLAT, OTHER SIDES MAX. SLOPE OF 1:3
		CONICAL DUCT TAKE OFF FROM RECTANGULAR VIA SPIN–IN W/DAMPER AND SCOOP
	ROUND DUCT	ROUND DUCT TAKE OFF FROM RECTANGULAR VIA SMOOTH CONVERGING BELL MOUTH
		RECTANGULAR DUCT TEE MAD'S ON THE 2 BRANCHES, THROAT SIZED FOR EQUAL PRESSURE DROP
		RECTANGULAR DUCT SPLIT MAD'S, THROAT SIZED FOR EQUAL PRESSURE DROP
		3–WAY RECTANGULAR SPLIT WITH TWO TRANSITIONAL ELBOWS AND TRANSITIONING MAIN. DOWNSTREAM MAD'S ON THE TREE BRANCHES. THROATS SIZED FOR EQUAL PRESSURE DROP.
		FOR CONCEALED DUCT: DROP TO DIFFUSER SHALL BE FULL SIZE OF DIFFUSER NECK. FOR EXPOSED DUCT: DROP SHALL BE FULL SIZE OF OD DIFFUSER FRAME, FLANGE FOR MOUNITING DIFFUSER TURNED IN. AIR EXTRACTOR AND EQUALIZER GRID AT CONNECTION TO MAIN.
		SUPPLY AIR, SUPPLY AIR DUCT IN SECTION, SUPPLY DROP
		RETURN AIR, RETURN AND OUTSIDE AIR DUCT IN SECTION, RETURN AIR DROP
		EXHAUST AIR, EXHAUST AIR DUCT IN SECTION, EXHAUST AIR DROP
		FLEXIBLE DUCT (ROUND)
		FLEXIBLE DUCT (FABRIC)
MAD, 18"ø, 10"ø, 12"ø		12"ø — 45° REDUCING LATERAL FITTING
MAD, 18"ø, 12"ø	18"ø, 12"ø, 10"ø	90° REDUCING TEE FITTING

MECHANICAL LEGEND

SYMBOL	ABBREVIATION	DESCRIPTION
	ABV	ABOVE
	ABC	ABOVE CEILING
	AF	ABOVE FLOOR
	AFF	ABOVE FINISHED FLOOR
	AFG	ABOVE FINISHED GRADE
	AI	ANALOG INPUT
	AD	ACCESS DOOR
	AP	ACCESS PANEL
	AC	AIR CONDITIONING
	APD	AIR PRESSURE DROP, INCHES WATER COLUMN
	BFP	BACKFLOW PREVENTER
	BF	BELOW FLOOR
	BAS	BUILDING AUTOMATION SYSTEM
	BHP	BRAKE HORSEPOWER
	BI	BINARY INPUT
	BO	BINARY OUTPUT
	BTU(H)	BRITISH THERMAL UNITS (PER HOUR)
	BPT	BYPASS TIMER
	CLG	CEILING
	CLR	CLEAR
— CD —	CD	CONDENSATE DRAIN LINE
	CONC	CONCRETE
	CONN	CONNECT OR CONNECTION
	CONT	CONTINUATION
	CFM	CUBIC FEET OF AIR FLOW PER MINUTE
	CS	CURRENT SWITCH
		DEGREES FAHRENHEIT
	DIA	DIAMETER
ΔP	ΔP	DIFFERENTIAL PRESSURE SENSOR, PIPE MOUNTED
	DL	DOOR LOUVER
	DN	DOWN
	DR	DRAIN
	(D)	DROP
	DB	DRY BULB (DEGREES FAHRENHEIT)
	DTR	DUCT THRU ROOF
	DX	DIRECT EXPANSION
	EF	EXHAUST FAN
	ELEC.	ELECTRIC, ELECTRICAL
	EL	ELEVATION
	EDB	ENTERING DRY BULB
	EW	ENTERING WATER
	EWT	ENTERING WATER TEMPERATURE
	EWB	ENTERING WET BULB
	EA	EXHAUST AIR
	EAD	EXHAUST AIR DAMPER
	(E), EXIST.	EXISTING
	EL, EXP. LP.	EXPANSION LOOP
	ESP	EXTERNAL STATIC PRESSURE
	FPM	FEET PER MINUTE
FS	FS	FIRE/SMOKE DAMPER
	FC	FLEXIBLE OR FLEXIBLE CONNECTION
	FLR	FLOOR
		FLOW IN DIRECTION OF ARROW
	FA	FROM ABOVE
	FB	FROM BELOW
	FLA	FULL LOAD AMPS
	GPH	GALLONS PER HOUR
	GPM	GALLONS PER MINUTE
	GALV	GALVANIZED
	GSM	GALVANIZED SHEET METAL
	GA	GAUGE
	GYP. BD.	GYPSUM BOARD
	HTG	HEATING
	HP	HORSEPOWER
	HW	HOT WATER
	HR	HOUR
	I.E.	INVERT ELEVATION
	IN. WC., IN. WG.	INCHES WATER GAGE, INCHES WATER COLUMN
	J–BOX	JUNCTION BOX
	KW	KILOWATTS
	KWH	KILOWATT HOUR
	LDB	LEAVING DRY BULB IN DEGREES FAHRENHEIT
	LWB	LEAVING WET BULB IN DEGREES FAHRENHEIT
	LRA	LOCKED ROTOR AMPERES
	MAV	MANUAL AIR VENT
	MAD, MD	MANUAL AIR DAMPER
M		MOTORIZED AIR DAMPER
	MFR	MANUFACTURER
	MAX	MAXIMUM
	MOCP	MAXIMUM OVER CURRENT PROTECTION
	MBH	THOUSANDS OF BRITISH THERMAL UNITS
	MIN	MINIMUM
	MCC	MOTOR CONTROL CENTER
	MS	MOTOR STARTER
	(N)	NEW
	OC	ON CENTER
	OA	OUTSIDE AIR
	OAD	OUTSIDE AIR DAMPER
	OH	OVERHEAD
	PH	PHASE
	POC	POINT OF CONNECTION
	LB, LBS	POUND, POUNDS
	PSI (G) (A)	POUNDS PER SQUARE INCH (GAUGE) (ABSOLUTE)
P OR	PD	PRESSURE DROP
	PG	PRESSURE GAUGE
	PRV	PRESSURE REDUCING VALVE

MECHANICAL LEGEND cont'd

SYMBOL	ABBREVIATION	DESCRIPTION
	REF	REFERENCE
— RS —	RS	REFRIGERANT SUCTION PIPING
— RL —	RL	REFRIGERANT LIQUID PIPING
	RA	RETURN AIR
	RAD	RETURN AIR DAMPER
	REQ'D	REQUIRED
	RPM	REVOLUTIONS PER MINUTE
	(R)	RISE
		RISER DOWN (ELBOW)
		RISER UP (ELBOW)
	RLA	RUNNING LOAD AMPERES
		SEISMIC EXPANSION JOINT
	SM	SHEET METAL
SD	SD	SMOKE DAMPER
SD	SKD	SMOKE DETECTOR
	SQFT, FT^2	SQUARE FEET
	SQIN, IN^2	SQUARE INCHES
	SP	STATIC PRESSURE
	SPD	STATIC PRESSURE DROP
SP	SP	STATIC PRESSURE SENSOR (DUCT AND SPACE)
	STR	STRAINER
	SA	SUPPLY AIR
	SF	SUPPLY FAN
		SWITCH, MANUAL FAN OPERATION
	TCV	TEMPERATURE CONTROL VALVE
	TCP	TEMPERATURE CONTROL PANEL
T X		TEMPERATURE SENSOR, "X" INDICATES DEVICE CONTROLLED
	TA	TO ABOVE
	TB	TO BELOW
	TP	TOTAL PRESSURE
	TSP	TOTAL STATIC PRESSURE
	TYP	TYPICAL
	UCD	UNDER CUT DOOR
	UG	UNDERGROUND
	UF	UNDER FLOOR
	UON	UNLESS OTHERWISE NOTED
	VLV	VALVE
	WPD	WATER PRESSURE DROP
	W	WATTS
	WT	WEIGHT
	WB	WET BULB
	WMS	WIRE MESH SCREEN
	WP	WORKING PRESSURE
— CWS —	CWS	CONDENSER WATER SUPPLY PIPING
— CWR —	CWR	CONDENSER WATER RETURN PIPING
— CHWS —	CHWS	CHILLED WATER SUPPLY PIPING
— CHWR —	CHWR	CHILLED WATER RETURN PIPING
— HWS —	HWS	HOT WATER SUPPLY PIPING
— HWR —	HWR	HOT WATER RETURN PIPING
— LPS —	LPS	LOW PRESSURE STEAM
— LPR —	LPR	LOW PRESSURE CONDENSATE RETURN
— PR(R) —	PR(R)	PRESSURE RELIEF, REFRIGERANT PIPING
— CD —	CD, D	CONDENSATE DRAIN , DRAIN
	TR	DUCT TRANSITION, LARGE TO SMALL
	AV, TCV	VALVE WITH MOTOR/ACTUATOR
	FLV	FLOW LIMITING VALVE
	AV, TCV	BUTTERFLY VALVE WITH MOTOR/ACTUATOR
	CBV	CALIBRATED BALANCE VALVE
	ANV	ANGLE VALVE
	BFP	BACKFLOW PREVENTER
	BFV	BUTTERFLY VALVE
	BV	BALL VALVE
	CKV	CHECK VALVE
	CP	CIRCULATING PUMP
	GV	BALL VALVE
	GL.V.	GLOBE VALVE
	GCK	GAGE COCK
	HV	HAND VALVE
	PRV	PRESSURE REDUCING VALVE
	PWR	POWER
OR	RV or P&TRV	RELIF VALVE OR PRESSURE & TEMPERATURE RELIEF VALVE
	TCV	TEMPERATURE CONTROL VALVE (2–WAY)
	TCV	TEMPERATURE CONTROL VALVE (3–WAY)
	FMS	FLOW MEASURING STATION
		VALVE IN RISER (TYPE AS INDICATED OR NOTED)
		FLOW IN DIRECTION OF ARROW
		PITCH DOWN IN DIRECTION OF FLOW
	UN	UNION
	FL	FLANGE
		EXISTING TO BE REMOVED
	EXP LP	EXPANSION LOOP
		PIPE ANCHOR
		PIPE GUIDE
	TG	TEMPERATURE GAUGE
	CR	CONCENTRIC REDUCER
	ER	ECCENTRIC REDUCER (FLAT SIDE ON TOP)
		SUCTION DIFFUSER
	STR	STRAINER W/BLOWDOWN VALVE

NOTE: ALL SYMBOLS AND ABBREVIATIONS MAY NOT BE USED ON PLANS.

CONSTRUCTION DOCUMENTS

Revisions	Date

CAPITAL ENGINEERING CONSULTANTS, INC.
RANCHO CORDOVA, CALIFORNIA
BZ/JD DESIGNER/DRAFTER — 11010300 PROJECT NO.

REGISTERED PROFESSIONAL ENGINEER ★ JOHN LIONAKIS ★ M 23783 ★ MECHANICAL ★ STATE OF CALIFORNIA
DATE SIGNED: 10/19/12

JACOBS
Consultants in Architecture, Engineering, Planning, and the Environment
Sacramento Office
180 Promenade Circle, Suite 300
Sacramento, California 95834
(916) 929-3323 Fax (916) 929-1772

Subconsultant List	
DREYFUSS & BLACKFORD	3540 FOLSOM BOULEVARD, SACRAMENTO, CA 95816 (916) 453–1234
CAPITAL ENGINEERING CONSULTANTS	11020 SUN CENTER DRIVE, RANCHO CORDOVA, CA 95670 (916) 851–3500
ECOM ENGINEERING INC.	1796 TRIBUTE ROAD, SUITE 100 SACRAMENTO, CA (916) 641–5600
BUEHLER & BUEHLER ASSOCIATES	600 Q STREET, STE. 200, SACRAMENTO, CA. 95814 (916) 443–0303
W.L. BURLE ENGINEERS, PA	111 S. WALNUT STREET, GREENVILLE, MS 38702 (662) 332–2619
AQUA ENGINEERING, INC.	4803 INNOVATION DRIVE, FORT COLLINS, CO 80525 (970) 229–9668
THE SIERRA WEST GROUP, LLC	2730 GATEWAY OAKS DRIVE, STE. 110 SACRAMENTO, CA. 95833 (916) 925–4000

DEPARTMENT OF VETERANS AFFAIRS • UNITED STATES OF AMERICA

NATIONAL CEMETERY ADMINISTRATION

Drawing Title: HVAC LEGENDS, SCHEDULES, & NOTES
Approved: Director, Office of Construction Management
Approved: Director, Project Management Service

Project Title: LOUISIANA NATIONAL CEMETERY GRAVESITE EXPANSION PHASE 1B
Building Number | Checked | Drawn
Location: LOUISIANA NATIONAL CEMETERY ZACHARY, LOUISIANA

Date: OCTOBER 24, 2012
Project No. 870CM3023B
DRAWING NO. H-1
Dwg. 127 of 150

CONSTRUCTION DOCUMENTS

GENERAL NOTES:

1. CAREFULLY COORDINATE DUCT ROUTING THROUGH CUSTOM TRUSSES WITH TRUSS MANUFACTURER AND STRUCTURAL PLANS.
2. SEE DUCT BRANCH TABLE ON SHEET H-1 FOR DUCT SIZES TO INDIVIDUAL DIFFUSERS AND GRILLES.
3. PROVIDE ALUMINUM EXHAUST GRILLES AND DUCTWORK CONNECTING TO EF-3.

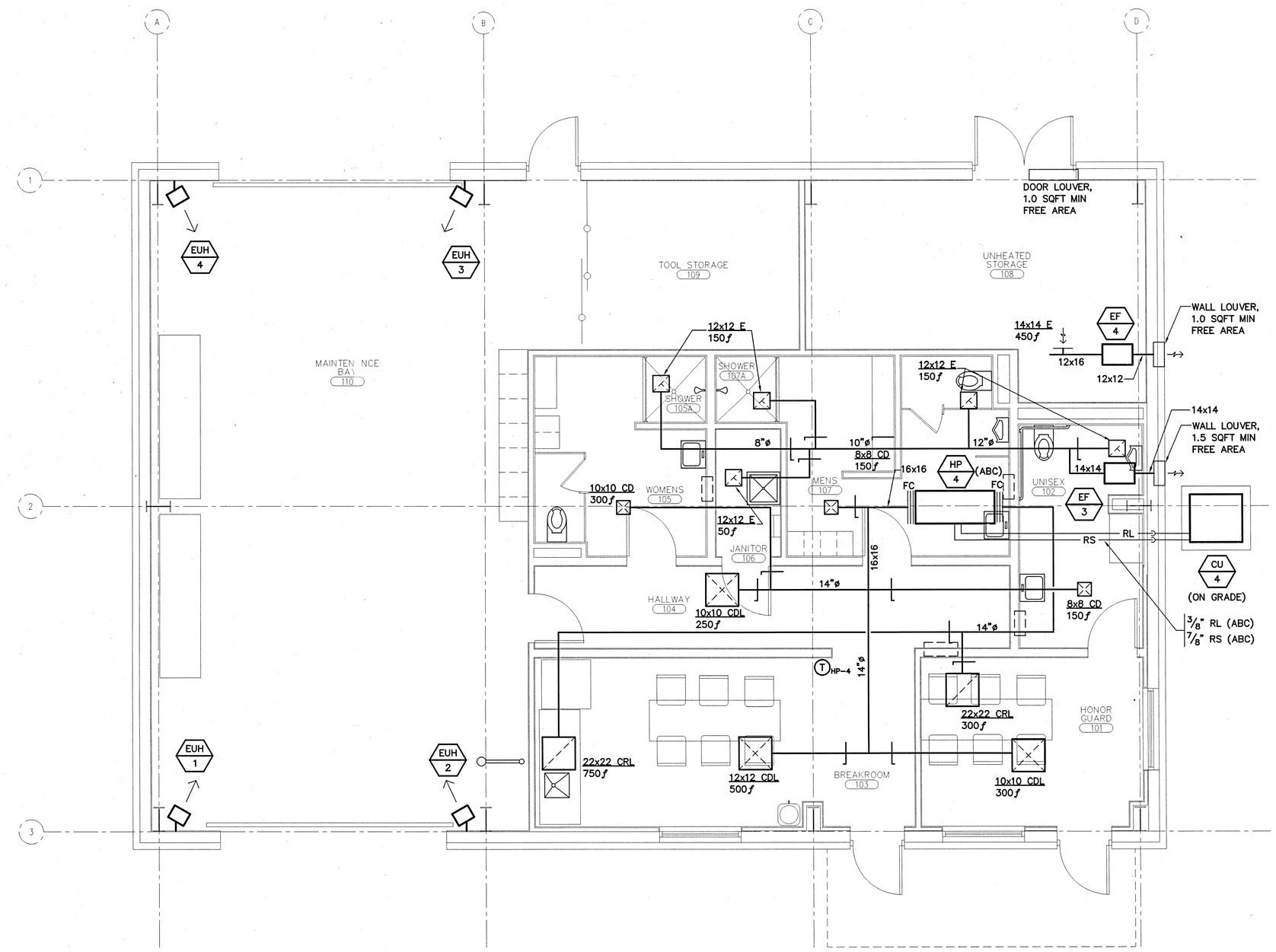

HVAC FLOOR PLAN - MAINTENANCE

1
3000-H1

SCALE : 1/4" = 1'-0"

CONSTRUCTION DOCUMENTS

Revisions	Date

CAPITAL ENGINEERING CONSULTANTS, INC.
RANCHO CORDOVA, CALIFORNIA
BZ/JD DESIGNER/DRAFTER
11013.00 PROJECT NO.

REGISTERED PROFESSIONAL ENGINEER JOHN LICHTAKER M 23783 EXPIRES 6/30/13 MECHANICAL STATE OF CALIFORNIA
DATE SIGNED: 10/17/12

JACOBS
Consultants in Architecture, Engineering, Planning, and the Environment
Sacramento Office
180 Promenade Circle, Suite 300
Sacramento, California 95834
(916) 929-3323 Fax (916) 929-1772

Subconsultant List

DREYFUSS & BLACKFORD	3540 FOLSOM BOULEVARD, SACRAMENTO, CA 95816 (916) 453-1234
CAPITAL ENGINEERING CONSULTANTS	11020 SUN CENTER DRIVE, RANCHO CORDOVA, CA 95670 (916) 851-3500
ECOM ENGINEERING INC.	1796 TRIBUTE ROAD, SUITE 100 SACRAMENTO, CA (916) 641-5600
BUEHLER & BUEHLER ASSOCIATES	600 Q STREET, STE. 200, SACRAMENTO, CA. 95814 (916) 443-0303
W.L. BURLE ENGINEERS, PA	111 S. WALNUT STREET, GREENVILLE, MS 38702 (662) 332-2619
AQUA ENGINEERING, INC.	4803 INNOVATION DRIVE, FORT COLLINS, CO 80525 (970) 229-9668
THE SIERRA WEST GROUP, LLC	2730 GATEWAY OAKS DRIVE, STE. 110 SACRAMENTO, CA. 95833 (916) 925-4000

NATIONAL CEMETERY ADMINISTRATION

Drawing Title: HVAC FLOOR PLAN – MAINTENANCE BUILDING	Project Title: LOUISIANA NATIONAL CEMETERY GRAVESITE EXPANSION PHASE 1B		Date: OCTOBER 24, 2012
Approved: Director, Office of Construction Management	Building Number: 3000	Checked	Drawn
Approved: Director, Project Management Service	Location: LOUISIANA NATIONAL CEMETERY ZACHARY, LOUISIANA		Project No. 870CM3023B
			DRAWING NO. 3000-H1 Dwg. 126 of 150

GENERAL NOTES:

1. FOR HEAT PUMP MOUNTING, FILTER RACK, AND DUCT CONNECTION DETAILS, SEE 1/H-3 & 2/H-3.
2. CAREFULLY COORDINATE DUCT ROUTING THROUGH CUSTOM TRUSSES WITH TRUSS MANUFACTURER AND STRUCTURAL PLANS.
3. SEE DUCT BRANCH TABLE ON SHEET H-1 FOR DUCT SIZES TO INDIVIDUAL DIFFUSERS AND GRILLES.

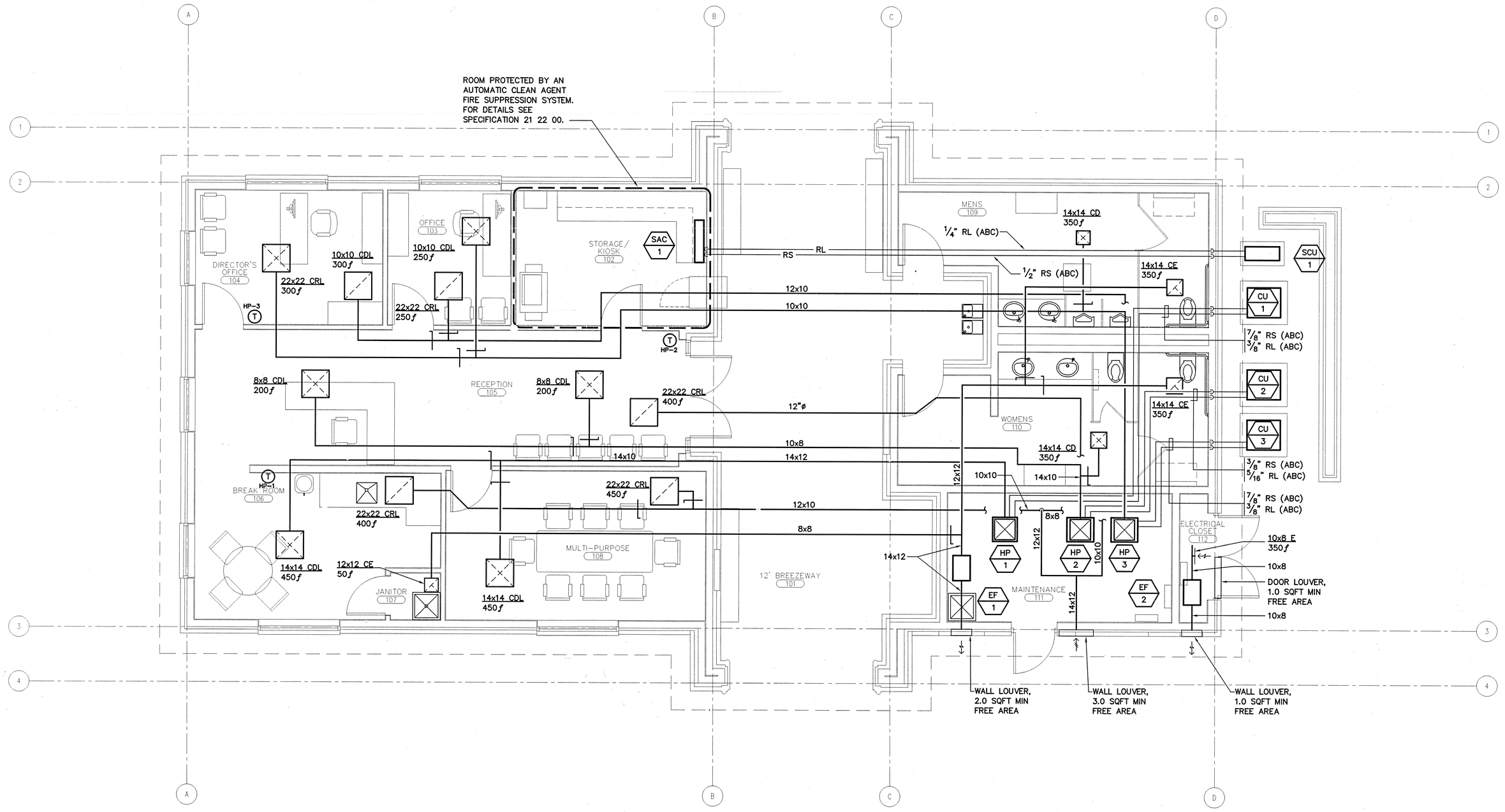

HVAC FLOOR PLAN - P.I.C./ADMINISTRATION (ADD - ALTERNATE 8)

SCALE : 1/4" = 1'-0"

1
1400-H1

N

CONSTRUCTION DOCUMENTS

Revisions	Date

CAPITAL ENGINEERING CONSULTANTS, INC.
RANCHO CORDOVA, CALIFORNIA
BZ/JD DESIGNER/DRAFTER
110/3.00 PROJECT NO.

REGISTERED PROFESSIONAL ENGINEER JOHN LIOVAKIS M 23753 EXPIRES 9/30/13 MECHANICAL STATE OF CALIFORNIA
DATE SIGNED: 10/19/12

JACOBS
Consultants in Architecture, Engineering, Planning, and the Environment
Sacramento Office
180 Promenade Circle, Suite 300
Sacramento, California 95834
(916) 929-3323 Fax (916) 929-1772

Subconsultant List	
DREYFUSS & BLACKFORD	3540 FOLSOM BOULEVARD, SACRAMENTO, CA 95816 (916) 453-1234
CAPITAL ENGINEERING CONSULTANTS	11020 SUN CENTER DRIVE, RANCHO CORDOVA, CA 95670 (916) 851-3500
ECOM ENGINEERING INC.	1796 TRIBUTE ROAD, SUITE 100 SACRAMENTO, CA (916) 641-5600
BUEHLER & BUEHLER ASSOCIATES	600 Q STREET, STE. 200, SACRAMENTO, CA. 95814 (916) 443-0303
W.L. BURLE ENGINEERS, PA	111 S. WALNUT STREET, GREENVILLE, MS 38702 (662) 332-2619
AQUA ENGINEERING, INC.	4803 INNOVATION DRIVE, FORT COLLINS, CO 80525 (970) 229-9668
THE SIERRA WEST GROUP, LLC	2730 GATEWAY OAKS DRIVE, STE. 110 SACRAMENTO, CA. 95833 (916) 925-4000

NATIONAL CEMETERY ADMINISTRATION

Drawing Title	HVAC FLOOR PLAN – P.I.C./ADMINISTRATION ADD – ALTERNATE #8
Approved: Director, Office of Construction Management	
Approved: Director, Project Management Service	
Project Title	LOUISIANA NATIONAL CEMETERY GRAVESITE EXPANSION PHASE 1B
Building Number	1400
Checked	
Drawn	
Location	LOUISIANA NATIONAL CEMETERY ZACHARY, LOUISIANA
Date:	OCTOBER 24, 2012
Project No.	870CM3023B
DRAWING NO.	1400-H1
Dwg.	125 of 150

L:\2011\110103.00\1200 Drawings\1205 AutoCAD Project Files\1400-H1.FM20 – October 19, 2012 – 82 – 41

CONSTRUCTION DOCUMENTS

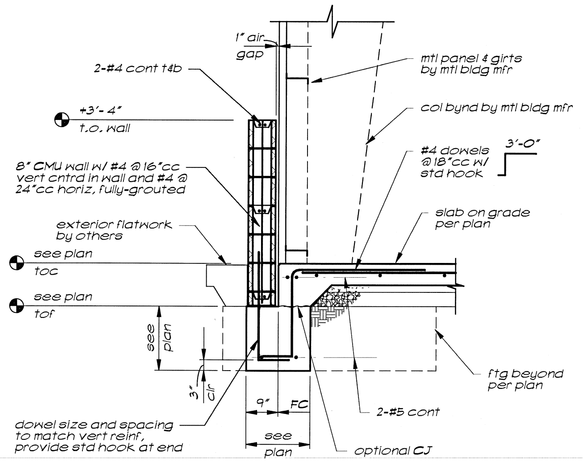

Slab Edge Section 1/3000-S4

2805D001-24

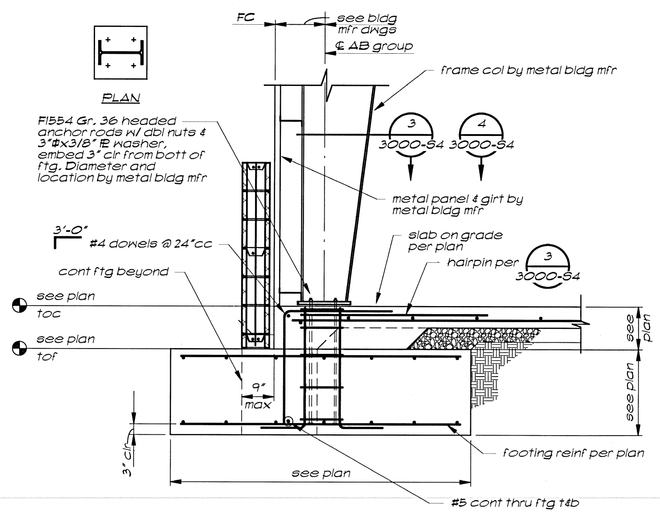

Edge Frame Column 2/3000-S4

2805D002-24

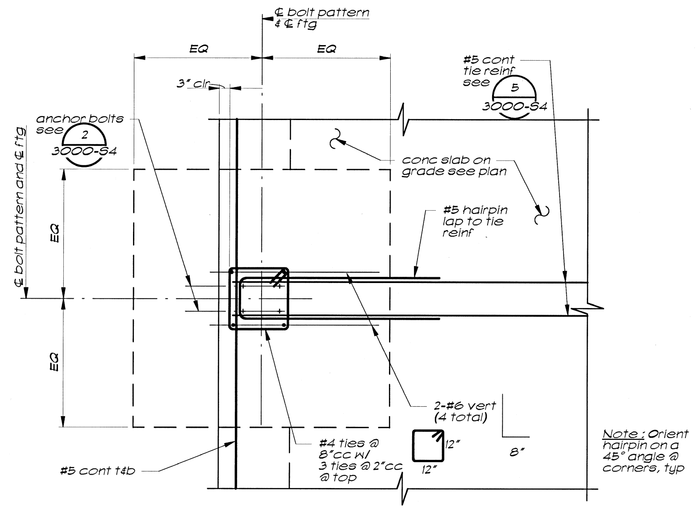

Edge Frame Column Plan 3/3000-S4

2805D003-24

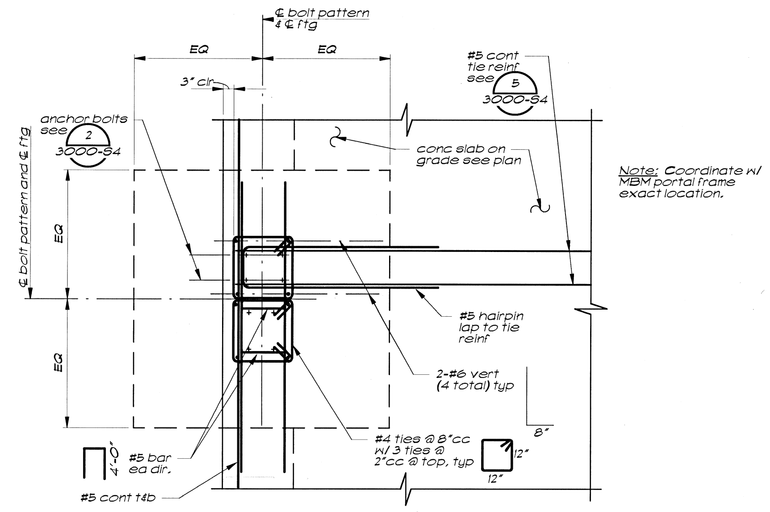

Edge Frame & Portal Frame Column Plan 4/3000-S4

2805D004-24

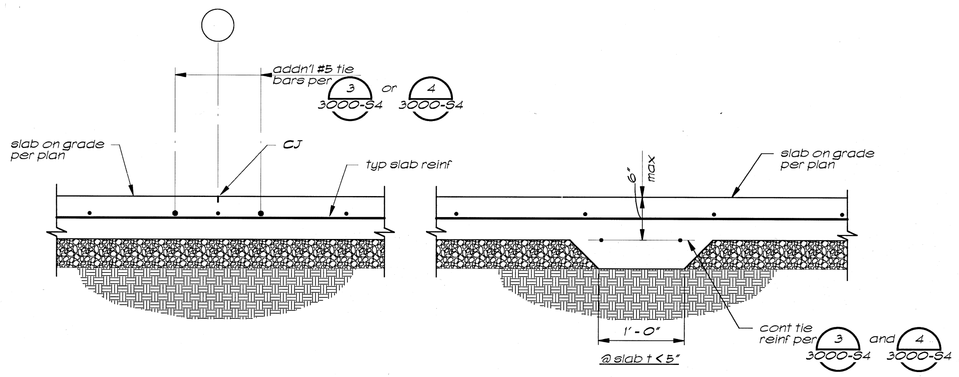

Slab @ Tie Bars 5/3000-S4

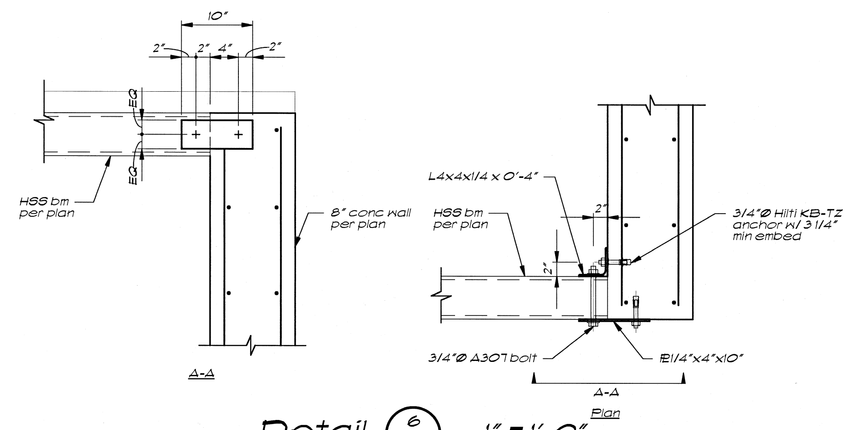

Detail 6/3000-S4 1" = 1'-0"

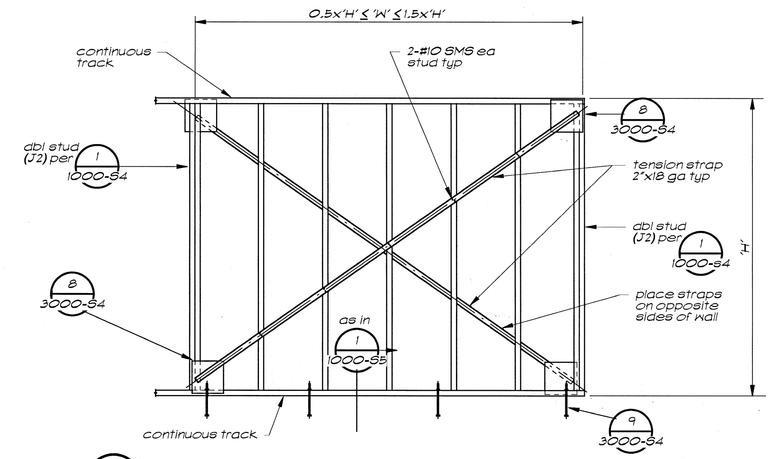

Braced Wall Elevation 7/3000-S4

542SD021-32

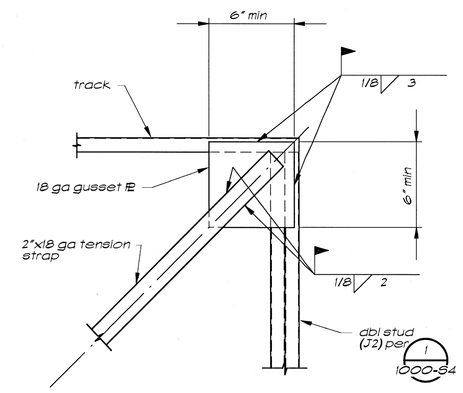

8/3000-S4 Gusset Plate Detail

542SD023-12

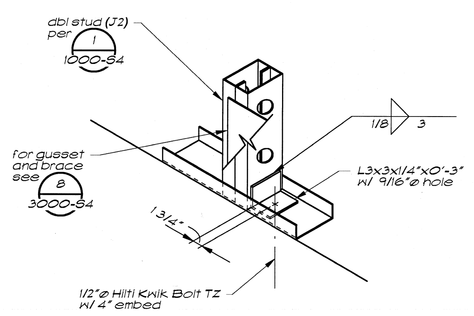

9/3000-S4 Holdown Detail

542SD025-12

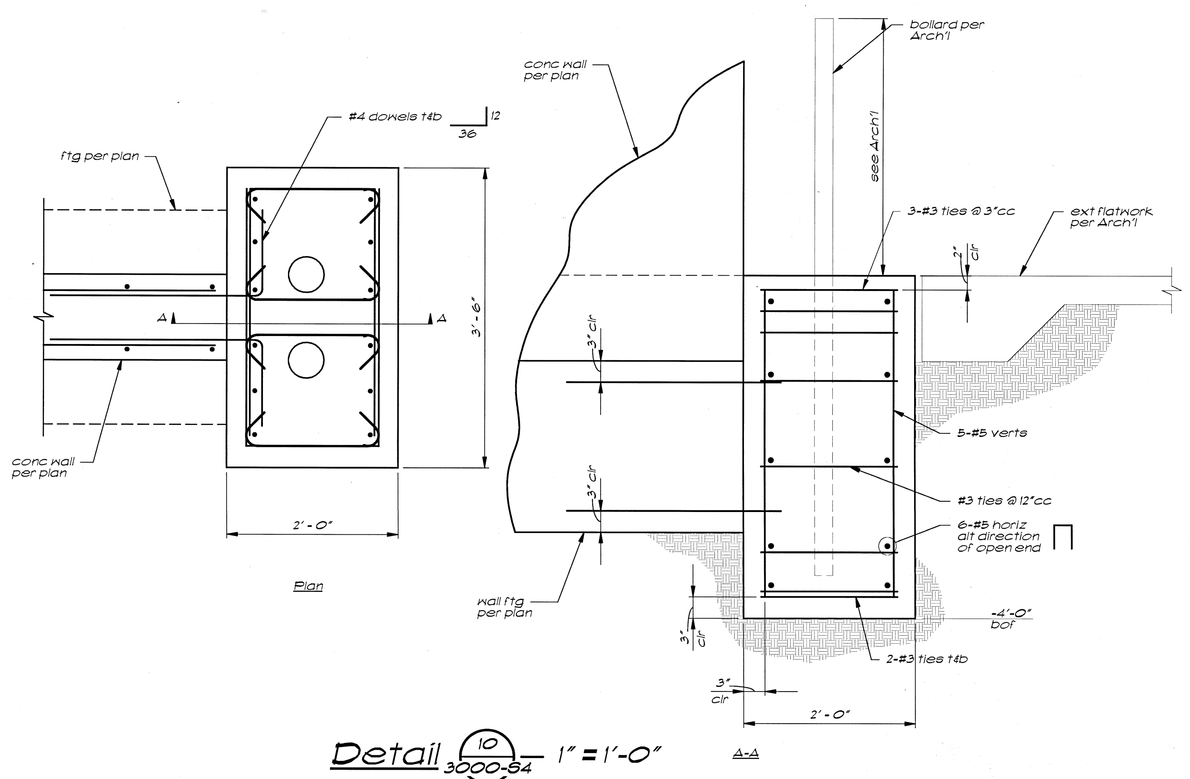

Detail 10/3000-S4 1" = 1'-0"

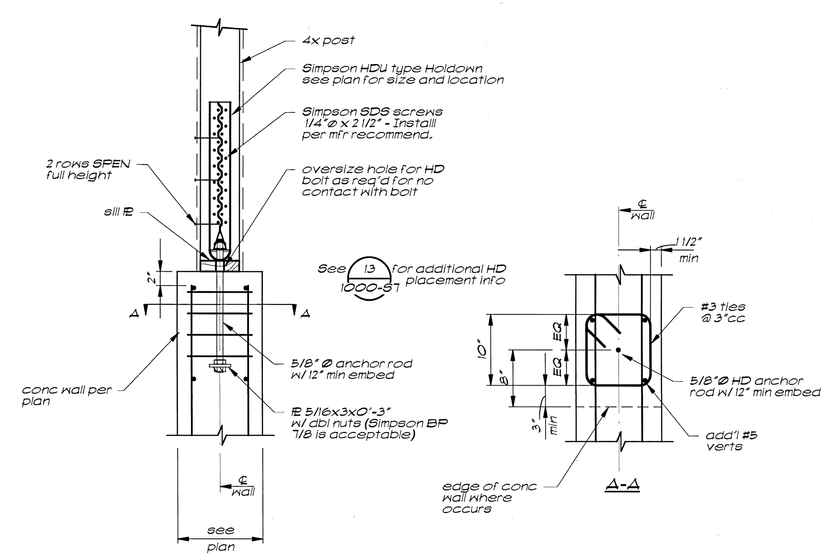

Detail 11/3000-S4 1" = 1'-0"

CONSTRUCTION DOCUMENTS

Revisions	Date

REGISTERED PROFESSIONAL ENGINEER BRIAN REIL No. 4337 Exp. 3/31/13 STRUCTURAL STATE OF CALIFORNIA

Buehler & Buehler Structural Engineers, Inc.
600 Q Street, Suite 200, Sacramento, CA 95811
tel 916.443.2503 fax 916.443.2313

JACOBS
Consultants in Architecture, Engineering, Planning, and the Environment
Sacramento Office
180 Promenade Circle, Suite 300
Sacramento, California 95834
(916) 929-3323 Fax (916) 929-1772

Subconsultant List

DREYFUSS & BLACKFORD	3540 FOLSOM BOULEVARD, SACRAMENTO, CA 95816 (916) 453-1234
CAPITAL ENGINEERING CONSULTANTS	11020 SUN CENTER DRIVE, RANCHO CORDOVA, CA 95670 (916) 851-3500
ECOM ENGINEERING INC.	1796 TRIBUTE ROAD, SUITE 100 SACRAMENTO, CA (916) 641-5600
BUEHLER & BUEHLER STRUCTURAL ENGINEERS, INC.	600 Q STREET, STE. 200, SACRAMENTO, CA. 95811 (916) 443-0303
W.L. BURLE ENGINEERS, PA	111 S. WALNUT STREET, GREENVILLE, MS 38702 (662) 332-2619
AQUA ENGINEERING, INC.	4803 INNOVATION DRIVE, FORT COLLINS, CO 80525 (970) 229-9668
THE SIERRA WEST GROUP, LLC	2730 GATEWAY OAKS DRIVE, STE. 110 SACRAMENTO, CA. 95833 (916) 925-4000

NATIONAL CEMETERY ADMINISTRATION

Drawing Title: DETAILS

Project Title: LOUISIANA NATIONAL CEMETERY GRAVESITE EXPANSION PHASE 1B

Date: OCTOBER 24, 2012

Project No. 870CM3023B

Approved: Director, Office of Construction Management

Building Number | Checked: BOR | Drawn: GAM

DRAWING NO. 3000-S4

Approved: Director, Project Management Service

Location: LOUISIANA NATIONAL CEMETERY ZACHARY, LOUISIANA

Dwg. 124 Of 150

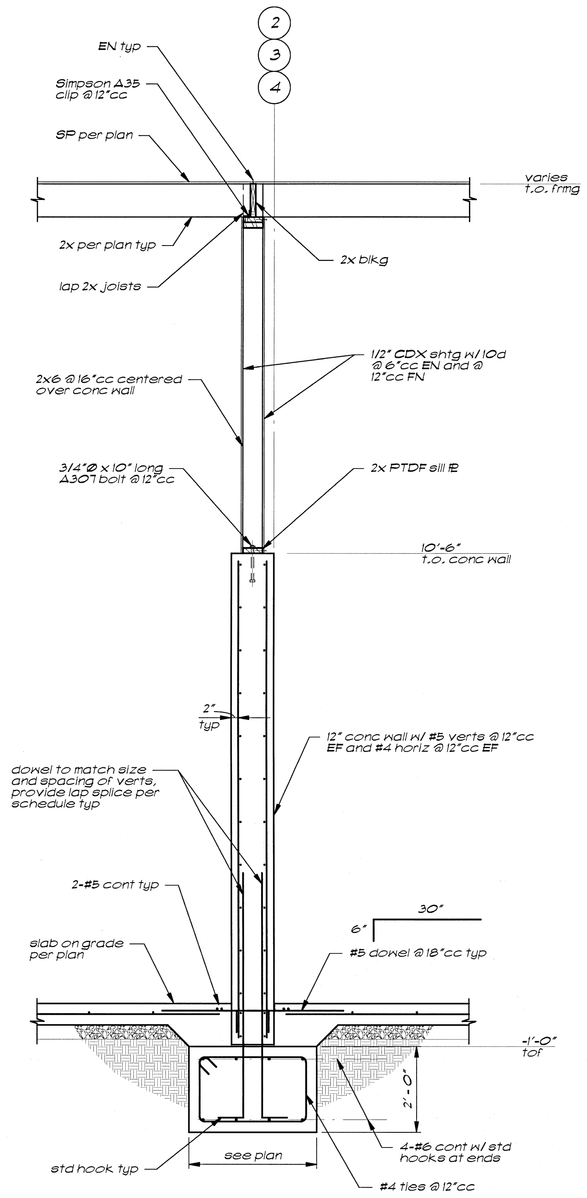

Section (F) 3000-S3 — 1/2" = 1'-0"

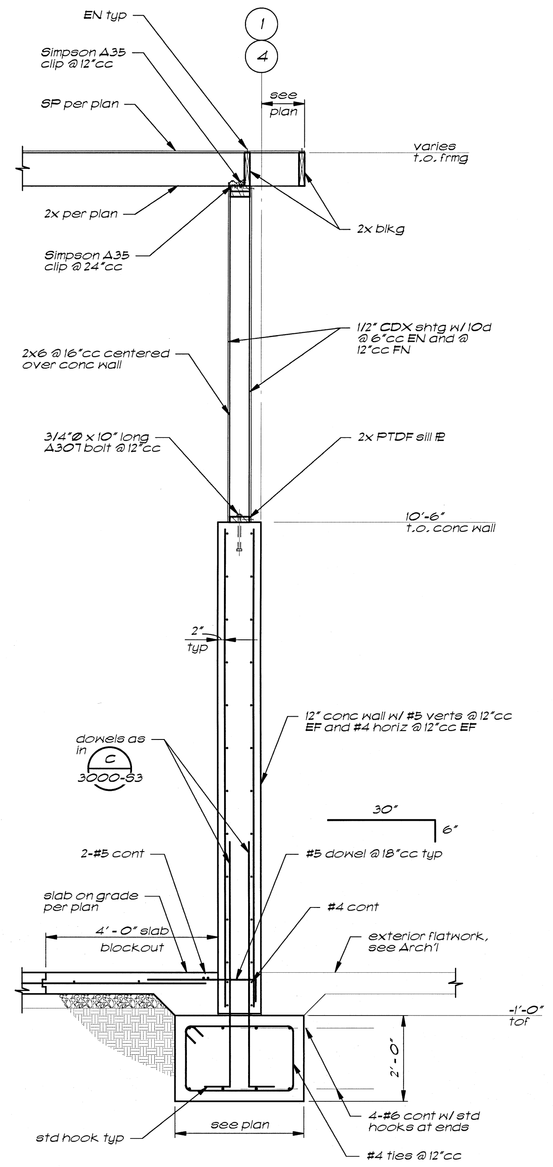

Section (G) 3000-S3 — 1/2" = 1'-0"

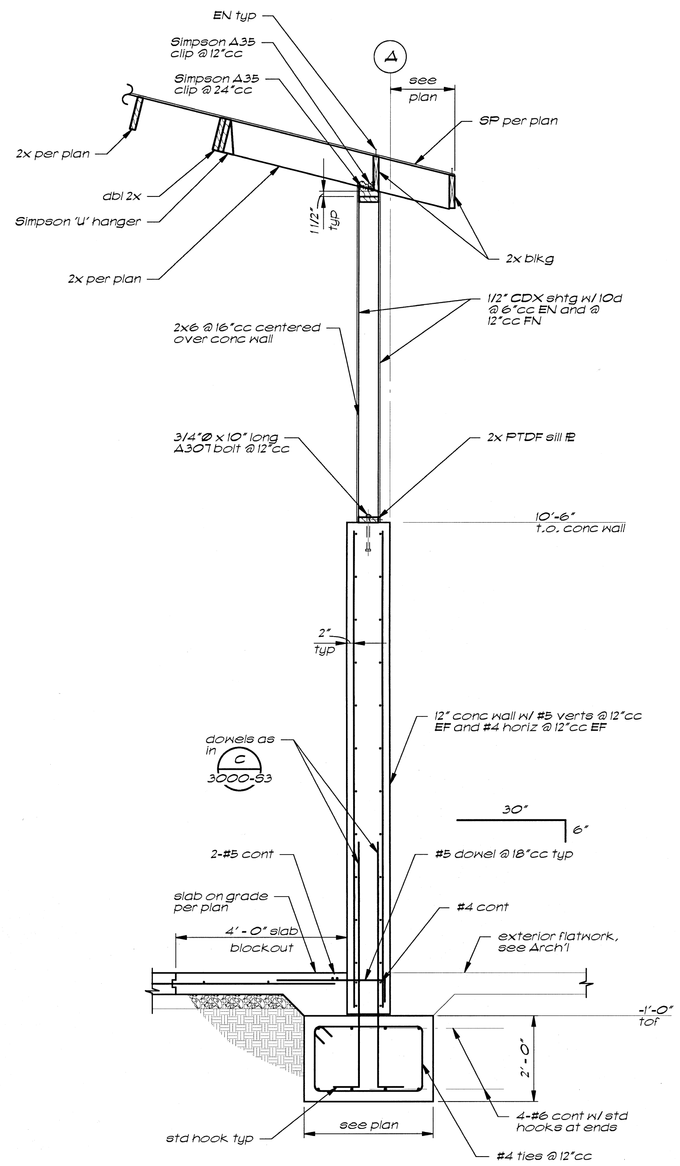

Section (H) 3000-S3 — 1/2" = 1'-0"

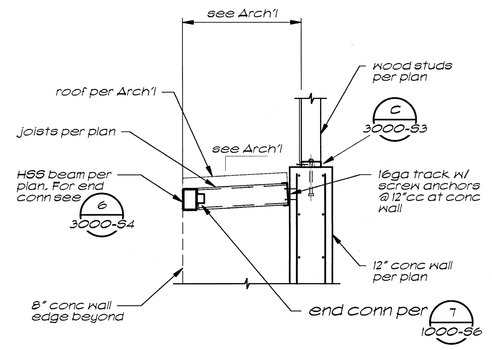

Section (J) 3000-S3 — 1/2" = 1'-0"

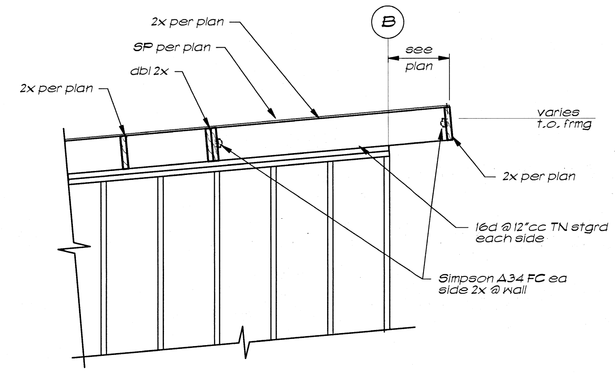

Section (K) 3000-S3 — 1/2" = 1'-0"

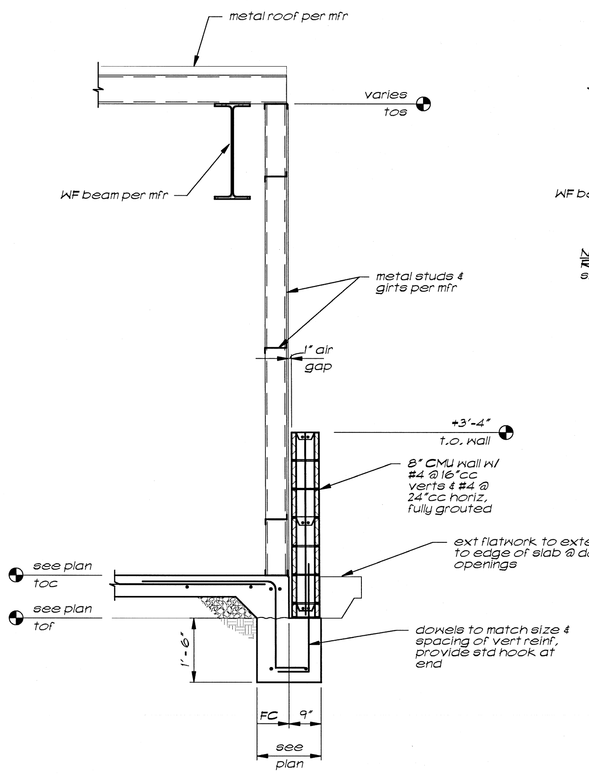

Section (A) 3000-S3 — 1/2" = 1'-0"

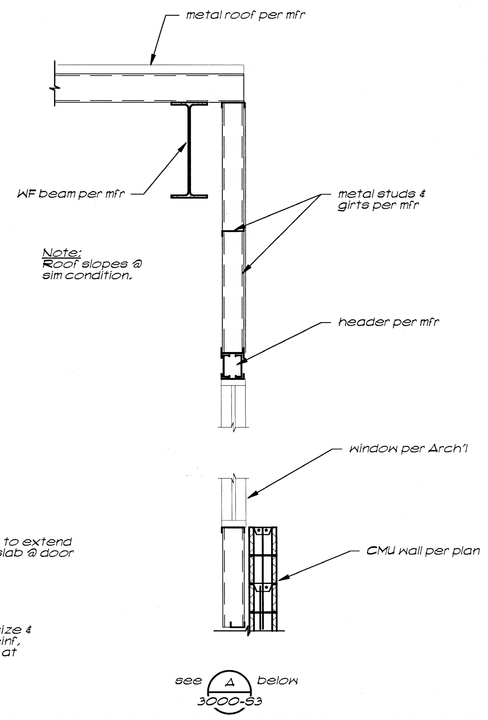

Section (B) 3000-S3 — 1/2" = 1'-0"

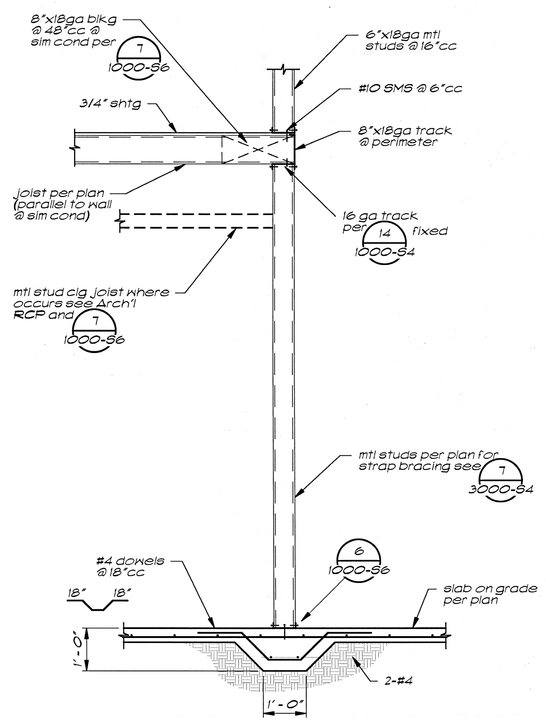

Section (C) 3000-S3 — 1/2" = 1'-0"

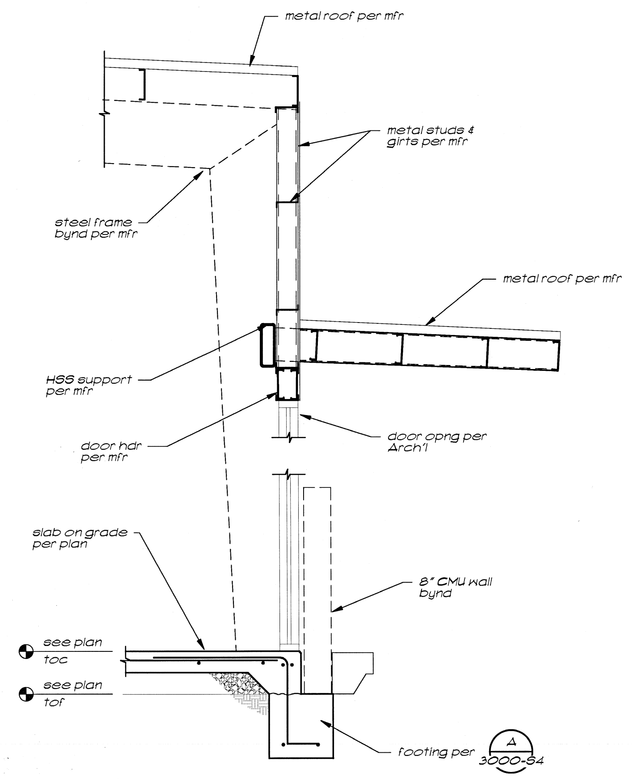

Section (D) 3000-S3 — 1/2" = 1'-0"

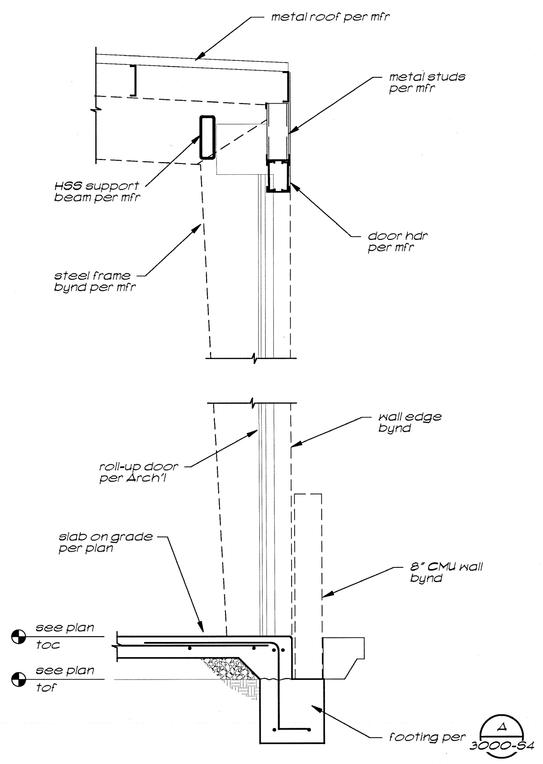

Section (E) 3000-S3 — 1/2" = 1'-0"

CONSTRUCTION DOCUMENTS

CONSTRUCTION DOCUMENTS

Revisions	Date

REGISTERED PROFESSIONAL ENGINEER — BRIAN REIL No. 4337 Exp. 3/31/13 STRUCTURAL — STATE OF CALIFORNIA

Buehler & Buehler Structural Engineers, Inc.
603 Q Street, Suite 200, Sacramento, CA 95811
tel 916.443.0303 fax 916.443.0313

JACOBS
Consultants in Architecture, Engineering, Planning, and the Environment
Sacramento Office
180 Promenade Circle, Suite 300
Sacramento, California 95834
(916) 929-3323 Fax (916) 929-1772

Subconsultant List

DREYFUSS & BLACKFORD	3540 FOLSOM BOULEVARD, SACRAMENTO, CA 95816 (916) 453-1234
CAPITAL ENGINEERING CONSULTANTS	11020 SUN CENTER DRIVE, RANCHO CORDOVA, CA 95670 (916) 851-3500
ECOM ENGINEERING INC.	1796 TRIBUTE ROAD, SUITE 100 SACRAMENTO, CA (916) 641-5600
BUEHLER & BUEHLER STRUCTURAL ENGINEERS, INC.	600 Q STREET, STE. 200, SACRAMENTO, CA. 95811 (916) 443-0303
W.L. BURLE ENGINEERS, PA	111 S. WALNUT STREET, GREENVILLE, MS 38702 (662) 332-2619
AQUA ENGINEERING, INC.	4803 INNOVATION DRIVE, FORT COLLINS, CO 80525 (970) 229-9668
THE SIERRA WEST GROUP, LLC	2730 GATEWAY OAKS DRIVE, STE. 110 SACRAMENTO, CA. 95833 (916) 925-4000

NATIONAL CEMETERY ADMINISTRATION

Drawing Title: SECTIONS

Project Title: LOUISIANA NATIONAL CEMETERY GRAVESITE EXPANSION PHASE 1B

Date: OCTOBER 24, 2012

Project No. 870CM3023B

Approved: Director, Office of Construction Management

Building Number

Checked: BOR

Drawn: GAM

DRAWING NO. 3000-S3

Approved: Director, Project Management Service

Location: LOUISIANA NATIONAL CEMETERY ZACHARY, LOUISIANA

Dwg. 123 Of 150

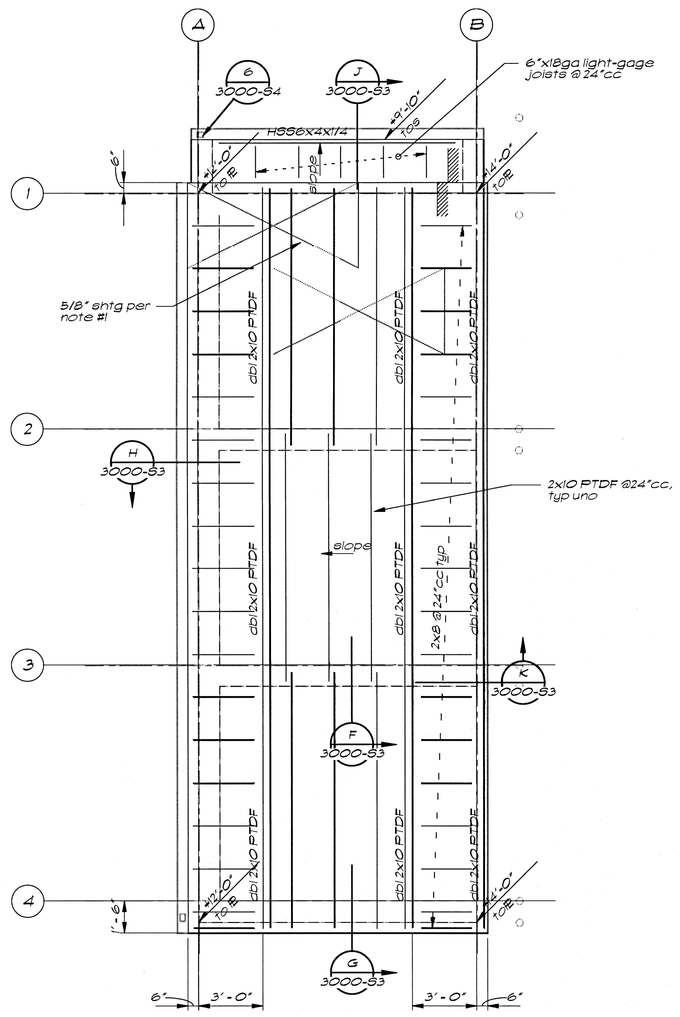

Bulk Storage Roof Framing Plan — 1/4" = 1'-0"

BUILDING 3001

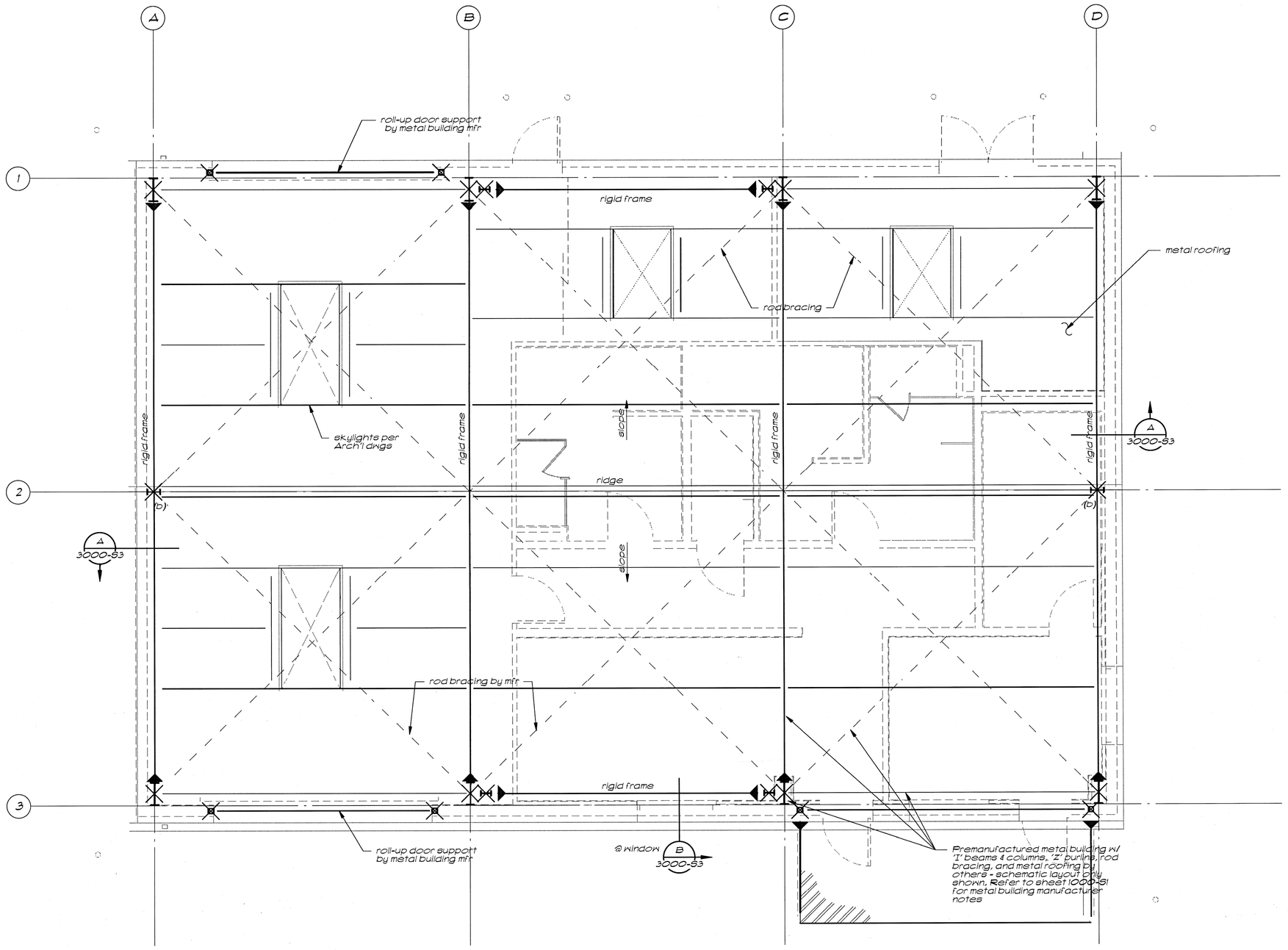

Maint Roof Framing Plan — 1/4" = 1'-0"

BUILDING 3000

Roof Framing Plan Notes

1. Roof sheathing shall be APA rated 5/8" sntg. Provide 10d common nails @ 6" cc at all supported edges and 10d @12" at all intermediate supports uno. Long dimension (face grain of plywood sntg) shall be perpendicular to rafters typical uno. For roof diaphragm rig, see 3/1000-S7. For typical roof opening framing, see 10/1000-S7.
2. Verify all dimensions with Arch't plans & elevations. Notify Architect immediately if there are any conflicts with the dimensions shown.
3. Indicates post below. Size per foundation plan.
   Indicates HSS column below. Size per foundation plan.
4. hdr — Indicates typical header per 4/1000-S8 uno on plans or in sections.
5. For typical hdr to jamb stud support detail, see 3/1000-S4 uno.
6. 10f — Indicates top of framing (t.o.f.) elevation (i.e., underside of sntg.), or t.o.w. (top of wall).
7. Indicates shear wall type below. See 4/400-S1.
8. Verify sizes and locations of all openings with architectural drawings. It is the responsibility of the General Contractor to coordinate the exact size and location of all openings to be used by other trades.
9. For typical notes, details and schedules, see sheets 1000-S1 to 1000-1007.

Roof Framing Plan Notes

1. Verify all dimensions with Arch't plans & elevations. Notify Architect immediately if there are any conflicts with the dimensions shown.
2. Indicates WF col below per metal building mfr drawings.
3. Verify sizes and locations of all openings with architectural drawings. It is the responsibility of the General Contractor to coordinate the exact size and location of all openings to be used by other trades.

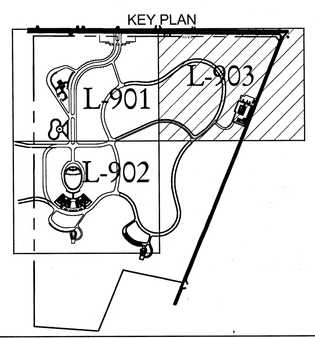

CONSTRUCTION DOCUMENTS

Revisions	Date

REGISTERED PROFESSIONAL ENGINEER — BRIAN REIL — No. 4337 — Exp. 3/31/13 — STRUCTURAL — STATE OF CALIFORNIA

Buehler & Buehler Structural Engineers, Inc.
600 Q Street, Suite 200, Sacramento, CA 95811
tel 916.443.0323 fax 916.443.0313

JACOBS
Consultants in Architecture, Engineering, Planning, and the Environment
Sacramento Office
180 Promenade Circle, Suite 300
Sacramento, California 95834
(916) 929-3323 Fax (916) 929-1772

Subconsultant List	
DREYFUSS & BLACKFORD	3540 FOLSOM BOULEVARD, SACRAMENTO, CA 95816 (916) 453-1234
CAPITAL ENGINEERING CONSULTANTS	11020 SUN CENTER DRIVE, RANCHO CORDOVA, CA 95670 (916) 851-3500
ECOM ENGINEERING INC.	1796 TRIBUTE ROAD, SUITE 100 SACRAMENTO, CA (916) 641-5600
BUEHLER & BUEHLER STRUCTURAL ENGINEERS, INC.	600 Q STREET, STE. 200, SACRAMENTO, CA. 95811 (916) 443-0303
W.L. BURLE ENGINEERS, PA	111 S. WALNUT STREET, GREENVILLE, MS 38702 (662) 332-2619
AQUA ENGINEERING, INC.	4803 INNOVATION DRIVE, FORT COLLINS, CO 80525 (970) 229-9668
THE SIERRA WEST GROUP, LLC	2730 GATEWAY OAKS DRIVE, STE. 110 SACRAMENTO, CA. 95833 (916) 925-4000

NATIONAL CEMETERY ADMINISTRATION

Drawing Title: MAINTENANCE & BULK STORAGE ROOF FRAMING PLAN

Approved: Director, Office of Construction Management

Approved: Director, Project Management Service

Project Title: LOUISIANA NATIONAL CEMETERY GRAVESITE EXPANSION PHASE 1B

Building Number | Checked: BOR | Drawn: GAM

Location: LOUISIANA NATIONAL CEMETERY ZACHARY, LOUISIANA

Date: OCTOBER 24, 2012

Project No. 870CM3023B

DRAWING NO. 3000-S2

Dwg. 122 Of 150

CONSTRUCTION DOCUMENTS

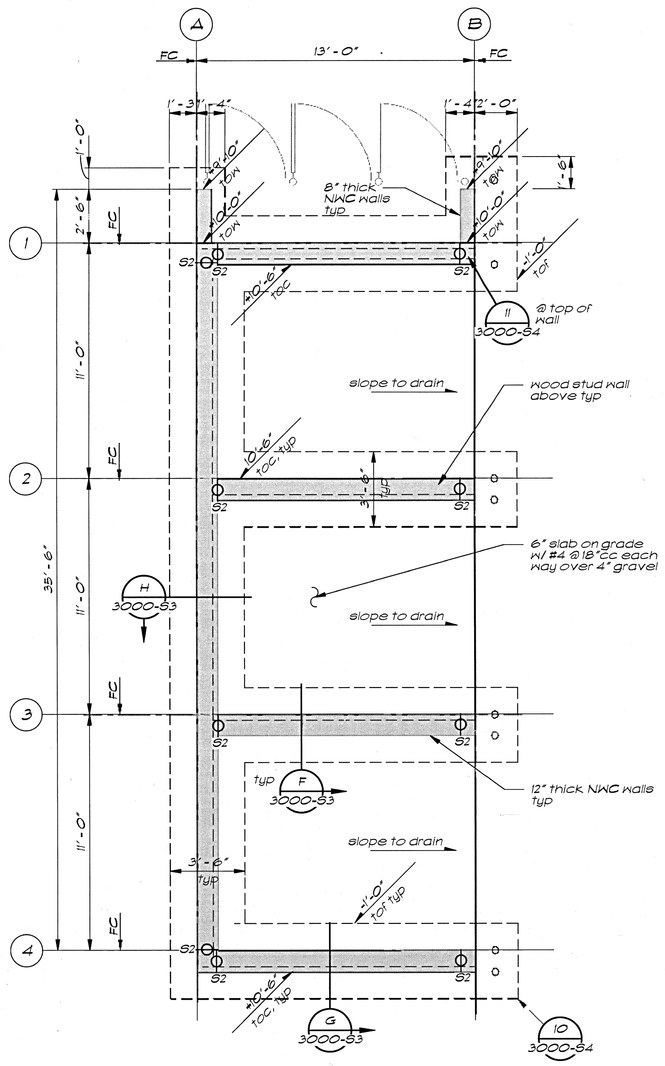

Bulk Storage Foundation Plan — 1/4" = 1'-0"

BUILDING 3001

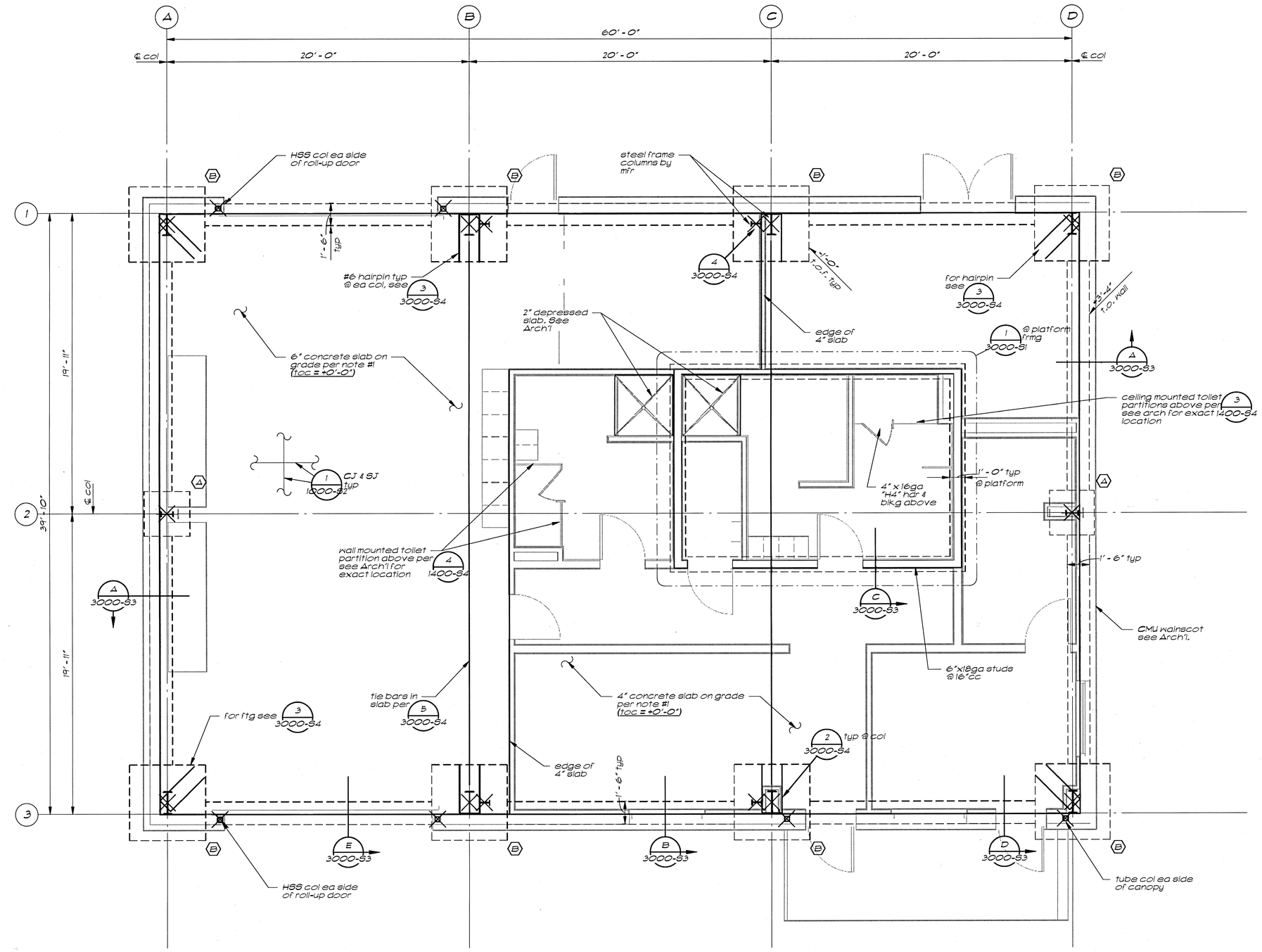

Maintenance Foundation Plan — 1/4" = 1'-0"

BUILDING 3000

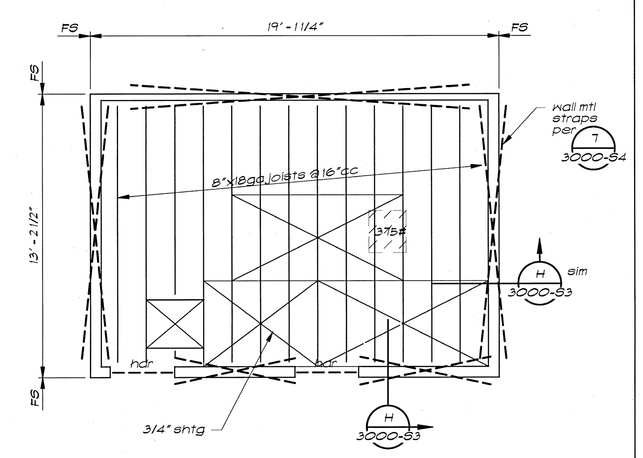

tof = +10'-3 1/4"

Platform Framing Plan — 1/4" = 1'-0"

Footing Schedule

Mark	Size	Reinforcing	Metal Bldg Reactions			
			LC	Vert Down	Vert Up	Thrust
A	4'-0" x 1'-6" thick	4-#5 EW (b)	D	-	-	-
			Lr	-	-	-
			W	-	-	-
			E	-	-	-
B	5'-0" x 1'-6" thick	5-#5 EW (tb)	D	-	-	-
			Lr	-	-	-
			W	-	-	-
			E	-	-	-

dwNotes:

1. Rebar shall be 3" clear from bottom and sides of footing, 2" clear from top.
2. Metal Building reactions listed are assumed. Loads to be verified prior to construction. See 'Typical Prefabricated Metal Building Notes' on sheet 1000-S1.
3. Unfactored reaction listed is at the interface of metal building column to conc slab or footing element.
4. Thrust indicates force acting in outward direction from building.

Foundation Plan Notes

1. Typical slab on grade shall be 4" NW concrete w/ #4 @ 18" cc ea way @ mid-depth over 15 mil vapor barrier. Provide slab on grade control joints as indicated in (1/1000-S2) typical for all interior slabs. Construction joints may replace control joints as required.
2. Reference top of concrete (toc) shall be +0'-0" typ uno. See Civil plans for datum elevation.
3. Verify all dimensions with Architectural drawings. Notify Architect/Engineer of any discrepancies for resolution prior to proceeding. Dimensions are to face of stud (FS), uno. Face of concrete lines up w/ face of entg.
4. (A/A) Indicates pad footing per (A/3000-S1). Footing to be centered on main WF col, uno.
5. Indicates HSS column. See metal building mfr. Indicates WF column. See metal building mfr.
6. Indicates 16ga built-up metal stud - For type see (1/1000-S4) See plan for type callout and locn.
7. Indicates 2x6 wood studs per plan, typ uno. All walls to have 1/2" entg. See sheet 1000-S1 for typical details.
8. Indicates 8" CMU wall. For reinf & typical details see sheet 1000-S3
17. Indicates Simpson HDU type holdowns, see (S5) (i.e. HS = HDU5).
10. Indicates elevation of top of footing below reference finished floor (tof) +0'-0", see plan.
11. Provide 3" minimum concrete cover at base PL's, AB's, and all other exposed steel below grade typ.
12. For utility line (pipe & conduit) penetrations through footings see (6/1000-S2)
13. See Architectural and Civil drawings for grades, finishes and other requirements of all exterior flatwork, curbs, planters, etc.
14. See Architectural drawings for door and window details and locations, blockouts at door closers, curbs, depressions, pedestal dimensions, slopes and other like items.
15. Refer to sheets 1000-S1 thru 1000-S7 for General Notes & Typical Details which are applicable to all drawings, uno.
16. Indicates typ hdr per (D/1000-S6).
17. See details (1/3000-S4) & (2/3000-S4) for typical edge of slab and f'tg conditions. MBM to coordinate dims accordingly.

KEY PLAN

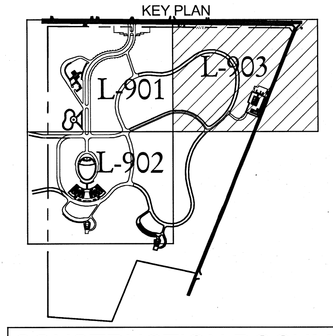

CONSTRUCTION DOCUMENTS

Revisions	Date

REGISTERED PROFESSIONAL ENGINEER — BRIAN REIL, No. 4337, Exp. 03/31/13, STRUCTURAL, STATE OF CALIFORNIA

Buehler & Buehler Structural Engineers, Inc.
600 Q Street, Suite 200, Sacramento, CA 95811
tel 916.443.0203 fax 916.443.0313

JACOBS
Consultants in Architecture, Engineering, Planning, and the Environment
Sacramento Office
180 Promenade Circle, Suite 300
Sacramento, California 95834
(916) 929-3323 Fax (916) 929-1772

Subconsultant List

DREYFUSS & BLACKFORD	3540 FOLSOM BOULEVARD, SACRAMENTO, CA 95816 (916) 453-1234
CAPITAL ENGINEERING CONSULTANTS	11020 SUN CENTER DRIVE, RANCHO CORDOVA, CA 95670 (916) 851-3500
ECOM ENGINEERING INC.	1796 TRIBUTE ROAD, SUITE 100 SACRAMENTO, CA (916) 641-5600
BUEHLER & BUEHLER STRUCTURAL ENGINEERS, INC.	600 Q STREET, STE. 200, SACRAMENTO, CA. 95811 (916) 443-0303
W.L. BURLE ENGINEERS, PA	111 S. WALNUT STREET, GREENVILLE, MS 38702 (662) 332-2619
AQUA ENGINEERING, INC.	4803 INNOVATION DRIVE, FORT COLLINS, CO 80525 (970) 229-9668
THE SIERRA WEST GROUP, LLC	2730 GATEWAY OAKS DRIVE, STE. 110 SACRAMENTO, CA. 95833 (916) 925-4000

NATIONAL CEMETERY ADMINISTRATION

Drawing Title: MAINTENANCE & BULK STORAGE FOUNDATION PLAN

Approved: Director, Office of Construction Management

Approved: Director, Project Management Service

Project Title: LOUISIANA NATIONAL CEMETERY GRAVESITE EXPANSION PHASE 1B

Building Number | Checked: BOR | Drawn: GAM

Location: LOUISIANA NATIONAL CEMETERY ZACHARY, LOUISIANA

Date: OCTOBER 24, 2012

Project No. 870CM3023B

DRAWING NO. 3000-S1

Dwg. 121 of 150

CONSTRUCTION DOCUMENTS

10/18/2012 2:12:23 PM C:\Users\Gerryw\Documents\Revit Local Files\Current Jobs\SDS-09008 Port Hudson\SDS-09008_PortHudson-Gerryw_LOCAL_R2011.rvt