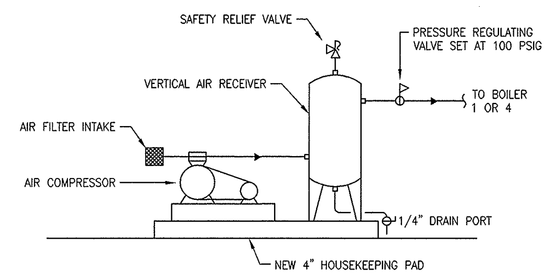

B3 ATOMIZING AIR COMPRESSOR SCHEMATIC
NOT TO SCALE

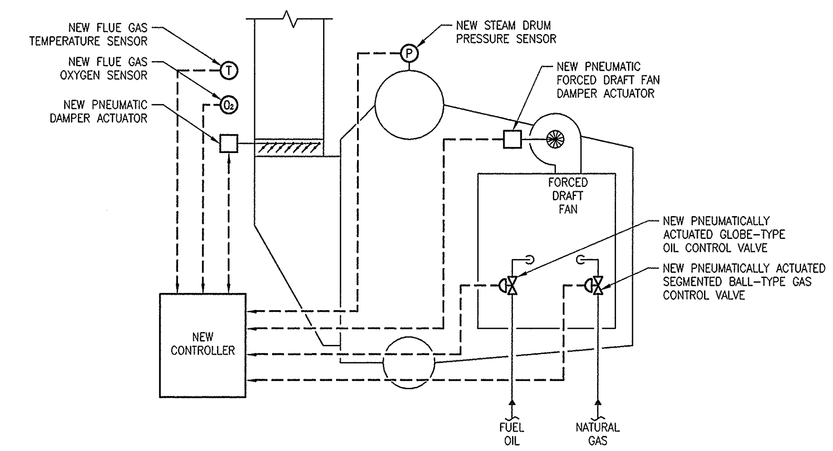

B6 NEW PARALLEL POSITIONING BOILER CONTROL WITH OXYGEN TRIM (BASE BID ONLY)
NOT TO SCALE

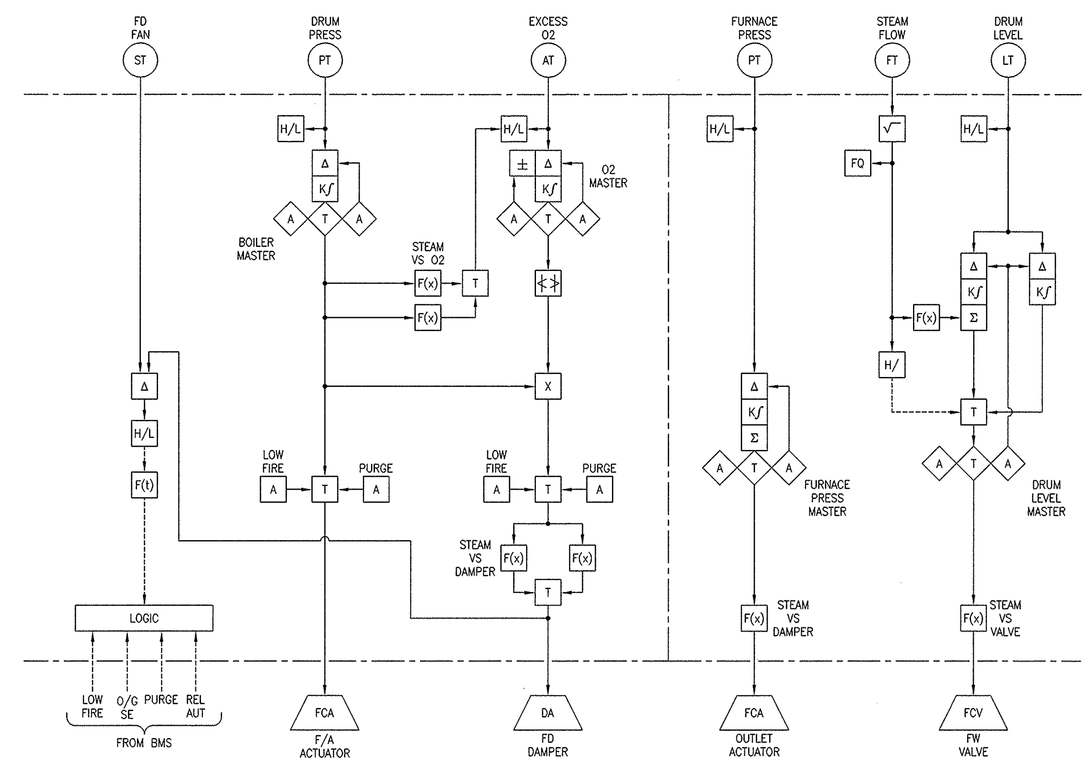

F6 PARALLEL POSITION WITH OXYGEN TRIM CONTROL DIAGRAM (BASE BID ONLY)
NOT TO SCALE

Revisions	Date

CONSULTANTS:

TA Engineering, Inc.
Technical Analysis and Engineering
CATONSVILLE PROFESSIONAL CENTER
405 FREDERICK ROAD, SUITE 252
BALTIMORE, MARYLAND 21228
(410) 747 - 9606 (PHONE)
(410) 747 - 9609 (FAX)

bkm Engineering Life Spaces
Burdette, Koehler, Murphy & Associates, Inc.
Mechanical / Electrical Consulting Engineers
1423 Clarkview Road, Suite 500, Baltimore, Maryland 21209
P 410.323.0600
F 410.377.2543
www.bkma.com

COMMONWEALTH OF PENNSYLVANIA
REGISTERED PROFESSIONAL
ALAN SCOTT ZEMLA
ENGINEER
PE055449E

ARCHITECT/ENGINEERS:

Drawing Title	MECHANICAL DETAILS, p. 2 of 2
Approved: Project Director	
Project Title	UPGRADE BOILER PLANT INSTRUMENTATION B/14
Location	COATESVILLE, PA
Date	7 MAY 2009
Checked	ASZ
Drawn	CHT
Project Number	542-06-109
Building Number	014
Drawing Number	14-M520
Dwg.	9 of 16

Office of Facilities Management
Department of Veterans Affairs

S:\07112 New Boiler Controls VA Coatesville\AutoCAD\Current\Mech Details Base C05.dwg, 5/8/2009 9:31:16 AM

VA FORM 08-6231, OCT 1978