GENERAL NOTES

DEMOLITION

EXISTING HVAC PIPING, DUCTWORK, AND EQUIPMENT SHOWN IS BASED ON EXISTING PLANS AND FIELD OBSERVATION WITHOUT DEMOLITION. AFTER DEMOLITION, ANY CLARIFICATION REQUIRED TO DETERMINE SCOPE OF WORK SHALL BE BROUGHT TO THE ATTENTION OF THE ARCHITECT.

THE CONTRACTOR SHALL VISIT THE JOB SITE AND BECOME THOROUGHLY FAMILIARIZED WITH THE EXISTING CONDITIONS.

DRAWINGS DO NOT SHOW EVERY EXISTING PIPE, CONDUIT, DUCT, ETC. CONTRACTOR SHALL TAKE CARE TO REMOVE ONLY ITEMS REQUIRED TO BE REMOVED AND VERIFY PIPES, DUCTS, ETC. BEFORE REMOVAL.

REMOVAL OF ITEMS SHALL INCLUDE ASSOCIATED HANGERS, ANCHOR BOLTS AND OTHER APPURTENANCES. WHERE SUCH REMOVAL RESULTS IN OPEN HOLES, VOIDS OR EXPOSURE OF DAMAGED SURFACES, THE CONTRACTOR SHALL BE RESPONSIBLE FOR REPAIRING AND FINISHING THE SURFACE TO MATCH ADJACENT CONDITIONS. THIS WORK SHALL BE COORDINATED WITH ARCHITECTURAL FINISH SCHEDULES WHERE APPLICABLE.

BUILDING IS TO REMAIN OCCUPIED DURING CONSTRUCTION. REMOVAL OR SHUT–DOWN OF EQUIPMENT THAT AFFECTS ANY OCCUPIED AREA'S AIR CONDITIONING OR HEATING SHALL ONLY BE DONE AS APPROVED OR TEMPORARY AIR CONDITIONING OR HEATING SHALL BE PROVIDED AT CONTRACTOR'S EXPENSE. THIS MAY REQUIRE NIGHT AND WEEKEND WORK TO KEEP BUILDING IN OPERATION.

IT MAY BE NECESSARY TO DISRUPT STEAM AND/OR CHILLED WATER SERVICE FOR A PORTION OF THE BUILDING FOR WORK ON THIS PROJECT. CONTRACTOR SHALL SUBMIT A PLAN FOR SERVICE SHUTDOWN TO COTR A MINIMUM OF 2 WEEKS IN ADVANCE OF ANY PROPOSED SHUTDOWN. CONTRACTOR SHALL NOT PROCEED WITH SHUTDOWN UNTIL COTR HAS APPROVED PLAN. IT MAY BE NECESSARY TO PERFORM SHUTDOWN SERVICE DURING NIGHT OR WEEKEND HOURS.

REMOVE EXISTING DUCTWORK AND PIPING NOT TO BE REUSED.

ALL MATERIALS REMOVED UNDER DEMOLITION, NOT TO BE RELOCATED OR DESIGNATED TO BE TURNED OVER TO THE OWNER, SHALL BECOME THE PROPERTY OF THE CONTRACTOR, UNLESS OTHERWISE NOTED, AND SHALL BE REMOVED COMPLETELY FROM THE SITE.

GENERAL ITEMS

GENERAL NOTES ON THIS DRAWING ARE APPLICABLE TO EACH HVAC DRAWING OF THIS SET. SEE EACH DRAWING FOR SPECIFIC NOTES APPLICABLE TO THAT DRAWING.

COORDINATE THAT OUTSIDE AIR INTAKE OPENINGS FOR VENTILATION AIR ARE LOCATED AT LEAST 10 FEET MEASURED IN ANY DIRECTION FROM ANY FLUES, VENTS, CHIMNEYS, GAS METERS, GAS REGULATORS, PLUMBING VENTS UNLESS TOP OF SUCH INTAKE OPENING IS 2 FEET BELOW ANY OF THE LISTED ITEMS.

OVERHEAD DUCTWORK IN SPACES WITH CEILINGS SHALL BE CONCEALED UNLESS OTHERWISE NOTED.

COORDINATE LOCATION OF GRILLES, REGISTERS, DIFFUSERS, THERMOSTATS AND OTHER WALL OR CEILING MOUNTED HVAC ACCESSORIES WITH REFLECTED CEILING PLAN, LIGHTING FIXTURE LAYOUT AND ACCESSORIES INSTALLED BY OTHER TRADES SO AS TO PRESENT A NEAT AND ATTRACTIVE INSTALLATION THROUGHOUT THE ENTIRE BUILDING. IT IS THE INTENT FOR GRILLES, REGISTERS AND DIFFUSERS TO BE INSTALLED IN THE CENTER OF CEILING PANELS.

ARRANGE PIPING AND DUCTWORK, PARTICULARLY ABOVE CEILING AS REQUIRED TO CLEAR STRUCTURE, DUCTS, CONDUITS, ETC. ALLOWING SPACE FOR PIPE HANGERS, EXPANSION LOOPS AND ACCESS TO VALVES, FILTERS, AND MAINTENANCE OF EQUIPMENT.

COORDINATE LOCATION AND INSTALLATION OF EQUIPMENT WITH OTHER TRADES.

DO NOT SCALE DRAWINGS. SEE ARCHITECTURAL DRAWINGS FOR EXACT LOCATIONS OF DOORS, WINDOWS, ETC.

THERMOSTATS SHALL BE LOCATED IN THE ROOMS INDICATED. INSTALL AT APPROX. 48" ABOVE FINISHED FLOOR.

DUCTWORK, VENTS, ETC., EXTENDING THROUGH EXTERIOR WALLS AND ROOF SHALL BE FLASHED AND COUNTER FLASHED IN A WEATHERPROOF MANNER.

VALVES AND SPECIALTIES SHALL BE LINE SIZE EXCEPT FOR CONTROL VALVES OR UNLESS NOTED OTHERWISE.

EXTEND DRAIN LINES TO NEAREST FLOOR DRAIN OR AS INDICATED. ROUTING SHALL NOT INTERFERE WITH PASSAGEWAYS AND MAINTENANCE. DRAINS FROM AIR CONDITIONING CONDENSATE DRAIN PANS SHALL BE TRAPPED. SLOPE CONDENSATE DRAIN PIPING AT 1/4" PER FOOT. VERIFY INVERT IS ESTABLISHED AFTER AIR HANDLING UNIT IS INSTALLED BUT PRIOR TO DUCTWORK INSTALLATION.

EQUIPMENT CONTAINING CHILLED WATER WHICH DO NOT HAVE A SECONDARY DRAIN OR AUXILIARY DRAIN PAN SHALL BE FITTED WITH A WATER LEVEL SENSOR IN THE PRIMARY DRAIN PAN. THE SENSOR SHALL BE WIRED TO DE–ENERGIZE THE EQUIPMENT IF WATER RISES ABOVE THE DRAIN OUTLET.

PIPING AND DUCTWORK INSULATION SHALL BE RUN CONTINUOUSLY THROUGH NON–RATED FLOORS, WALLS, ROOF AND PARTITIONS, UNLESS OTHERWISE INDICATED.

NO PIPING SHALL BE SMALLER THAN 3/4" UNLESS OTHERWISE NOTED.

FOR PIPE SIZES NOT INDICATED ON PLANS, SEE EQUIPMENT CONNECTION DETAILS, FLOW DIAGRAMS AND RISER DIAGRAMS AND PIPE SIZING SCHEDULE.

PROVIDE UNION OR FLANGED CONNECTIONS AT EACH PIECE OF EQUIPMENT AND ON BOTH SIDES ON CONTROL VALVES AND PRESSURE REGULATING VALVES. PROVIDE SHUT–OFF VALVES ON BOTH SIDES OF AUTOMATIC VALVES.

PIPING SHALL BE SUPPORTED IN ACCORDANCE WITH THE SPECIFICATIONS. ADDITIONAL SUPPORTS OR HANGERS SHALL BE ADJACENT TO ELBOWS, TO PREVENT WEIGHT OF PIPING BEING PLACED ON THE EQUIPMENT.

CORRECT SETTING ON BALANCING FITTINGS SHALL BE PERMANENTLY MARKED.

FOR LOCATION OF MOTOR STARTERS, SEE ELECTRICAL DRAWINGS.

TRANSPORT OF AIR HANDLING UNIT INTO MECHANICAL ROOM

CONTRACTOR SHALL DETERMINE BEST WAY TO TRANSPORT AIR HANDLING UNIT INTO MECHANICAL ROOM ON FOURTH FLOOR USING AVAILABLE MEANS OF ACCESS. IT WILL BE NECESSARY TO DISASSEMBLE AIR HANDLING UNIT INTO SECTIONS FOR TRANSPORT INTO ROOM.

CONTRACTOR SHALL BECOME FAMILIAR WITH AVAILABLE MEANS OF ACCESS BY VISITING THE SITE. ANY CONCERNS ABOUT ACCESS SHALL BE BROUGHT TO THE ATTENTION OF THE ARCHITECT DURING THE BID PHASE.

CRANE LIFT IS REQUIRED FOR THIS PROJECT. CONTRACTOR SHALL INCLUDE PRICE OF CRANE IN BID. CONTRACTOR SHALL PROVIDE FOR TRAFFIC CONTROL DURING CRANE OPERATION. COORDINATE WITH DRAWING GI002.

CONTRACTOR SHALL INCLUDE PRICE OF ASSEMBLY AND DISASSEMBLY OF EQUIPMENT IN BID.

THROUGH–PENETRATION FIRESTOP ASSEMBLIES

PROVIDE UL LISTED THROUGH–PENETRATION ASSEMBLIES FOR FIREWALLS AND FLOORS. REVIEW ARCHITECTURAL DRAWINGS FOR FIRE PARTITION LOCATIONS AND UL LISTINGS.

CHILLED WATER PIPING

PROVIDE MINIMUM PITCH SUFFICIENT TO INSURE ADEQUATE VENTING AND DRAINAGE.

PROVIDE MANUAL AIR VENTS AT HIGH POINTS OF SYSTEM.

PROVIDE 1/2" DRAIN VALVES AND CAPPED CONNECTIONS AT LOW POINTS IN PIPING SYSTEMS FOR DRAINING.

STEAM PIPING

PITCH STEAM AND GRAVITY CONDENSATE PIPING, MINIMUM 1" IN 40' IN DIRECTION OF FLOW, UNLESS OTHERWISE INDICATED.

STEAM MAINS SHALL PITCH DOWN IN DIRECTION OF FLOW A MINIMUM OF 1" IN 40'.

DRIP POINTS SHALL BE INSTALLED AT POINTS INDICATED ON THE DRAWINGS AND WHERE REQUIRED.

DO NOT LIFT LOW PRESSURE CONDENSATE.

SHEET METAL

PROVIDE ACCESS DOORS IN DUCTWORK WHERE INDICATED OR REQUIRED FOR ACCESS TO SYSTEM COMPONENTS INCLUDING THE FOLLOWING:

DAMPER MOTORS AND/OR MOTOR OPERATED DAMPERS
FIRE DAMPERS
CONTROL DAMPERS

INSTALL CEILING REGISTERS A MINIMUM OF 4" FROM EXTERIOR WALL.

PROVIDE A MINIMUM OF THREE TIMES THE FAN DIAMETER OF STRAIGHT DUCTWORK OFF THE SUPPLY AIR FAN DISCHARGE BEFORE ANY TAKEOFFS OR ELBOWS.

DUCTWORK SHALL BE CONSTRUCTED TO THE SMACNA STATIC PRESSURE CLASSIFICATION OF 2" W.G. AND SEAL CLASS "B".

PROVIDE EXTENDED VOLUME DAMPER CONTROL RODS SO THAT HANDLES ARE WELL CLEAR OF DUCT INSULATION.

MAINTENANCE

EQUIPMENT WITH FILTERS SHALL BE INSTALLED SO THAT FILTERS CAN BE EASILY REMOVED AND REPLACED.

PROVIDE ACCESS TO ANY INSPECTION OR MAINTAINABLE DEVICE, EQUIPMENT, ETC. – ACCESS OR ACCESS DOOR SHALL BE OF ADEQUATE SIZE TO WORK ON DEVICE.

EXAMINE MANUFACTURER'S LITERATURE TO DETERMINE RECOMMENDED CLEARANCES. THESE CLEARANCES SHALL BE ESTABLISHED AND MAINTAINED. THE CONTRACTOR SHALL BE RESPONSIBLE FOR COORDINATING THESE REQUIREMENTS WITH ALL OTHER TRADES.

LEGEND and ABBREVIATIONS

- DEMOLITION NOTE DESIGNATION
- NEW WORK NOTE DESIGNATION
- LOCATION DESIGNATION
- POINT OF CONNECTION NEW TO EXISTING
- POINT OF DEMOLITION LIMIT
- SECTION
- SHEET WHERE SECTION IS SHOWN
- SHEET WHERE SECTION IS CUT
- AHU–1 AIR HANDLING UNIT DESIGNATION
- EF–1 EXHAUST FAN DESIGNATION
- L–1 LOUVER DESIGNATION
- WALL MOUNTED TEMPERATURE SENSOR
- BDD BACKDRAFT DAMPER
- VOLUME DAMPER
- FIRE DAMPER (VERTICAL)
- X 200 GRILLE, REGISTER OR DIFFUSER MARK (CFM AS INDICATED)
- SUPPLY AIR/OUTSIDE AIR DUCT SECTION
- RETURN/EXHAUST DUCT SECTION
- RETURN/EXHAUST DUCT SECTION THROUGH ROOF
- DUCT TURNING UP
- DUCT TURNING DOWN
- CEILING DIFFUSER WITH FLEXIBLE DUCTWORK
- RETURN/EXHAUST REGISTER
- MITERED ELBOW WITH TURNING VANES
- FLEXIBLE DUCT CONNECTOR

- ISOLATION VALVE
- GATE VALVE WITH 3/4" HOSE ADAPTER
- BALL VALVE
- WYE STRAINER (WITH BALL VALVE & HOSE CONNECTION)
- CHECK VALVE
- PRESSURE REDUCING VALVE
- MV MANUAL AIR VENT
- REDUCER OR INCREASER
- UNION
- FLOAT AND THERMOSTATIC TRAP SET
- FE FLOW ELEMENT
- MODULATING CONTROL VALVE
- PIPE TURNING UP
- PIPE TURNING DOWN
- PRESSURE GAGE
- WATER BALANCE DEVICE
- DIRECTION OF PITCH DOWN
- DIRECTION OF FLOW
- CWS CHILLED WATER SUPPLY PIPING
- CWR CHILLED WATER RETURN PIPING
- D CONDENSATE DRAIN
- LPS LOW PRESSURE STEAM PIPING
- LPC LOW PRESSURE CONDENSATE
- MPS MEDIUM PRESSURE STEAM
- 2 HOUR FIRE RATED WALL

CONTROLS LEGEND

- DM DAMPER MOTOR
- AO1 ANALOG OUTPUT
- AI1 ANALOG INPUT
- DO1 DIGITAL OUTPUT
- DI1 DIGITAL INPUT
- TS TEMPERATURE SENSOR
- DDS DIFFERENTIAL PRESSURE SENSOR
- CO2 CO2 SENSOR
- MOTOR STARTER
- MOTOR
- FS FREEZE STAT

A.F.F.	ABOVE FINISHED FLOOR
AHU	AIR HANDLING UNIT
APD	AIR PRESSURE DROP
APPROX.	APPROXIMATELY
BDD	BACKDRAFT DAMPER
CALC.	CALCULATED
CFM	CUBIC FEET PER MINUTE
COTR	CONTRACTING OFFICER'S TECHNICAL REPRESENTATIVE
CSR	CURRENT SENSING RELAY
CV	CONSTANT VOLUME
CW	CHILLED WATER
DB	DRY BULB TEMPERATURE/DECIBELS
DDC	DIRECT DIGITAL CONTROL
DPS	DIFFERENTIAL PRESSURE SENSOR
EA	EXHAUST AIR
EAT	ENTERING AIR TEMPERATURE
EDB	ENTERING DRY BULB TEMPERATURE
EL.	ELEVATION
EWB	ENTERING WET BULB TEMPERATURE
ETR	EXISTING TO REMAIN
ESP	EXTERNAL STATIC PRESSURE
EWT	ENTERING WATER TEMPERATURE
°F	DEGREE FAHRENHEIT
FA	FREE AREA
FACP	FIRE ALARM CONTROL PANEL
FD	FLOOR DRAIN
FC	FORWARD CURVED
FLA	FULL LOAD AMPS
FPM	FEET PER MINUTE
FS	FREEZESTAT
FT	FEET
GC	GENERAL CONTRACTOR
GPM	GALLONS PER MINUTE
HP	HORSEPOWER
HR	HOUR
HVAC	HEATING, VENTILATING AND AIR CONDITIONING
HW	HOT WATER
IN	INCH
LAT	LEAVING AIR TEMPERATURE
LBS	POUNDS
LDB	LEAVING DRY BULB TEMPERATURE
LWB	LEAVING WET BULB TEMPERATURE
LWT	LEAVING WATER TEMPERATURE
MAX	MAXIMUM
MBH	1000 BRITISH THERMAL UNITS PER HOUR
MCA	MIN CIRCUIT AMPACITY
MIN	MINIMUM
MOCP	MAX OVERCURRENT PROTECTION
NC	NOISE CRITERIA OR NORMALLY CLOSED
NO	NORMALLY OPEN/NUMBER
NTS	NOT TO SCALE
OA	OUTSIDE AIR
OAD	OUTSIDE AIR DAMPER
OBD	OPPOSED BLADE DAMPER
PSIG	POUND PER SQUARE INCH GAUGE
P.D.	PRESSURE DROP
RA	RETURN AIR
RE	IN REFERENCE TO
RH	RELATIVE HUMIDITY
RPM	REVOLUTIONS PER MINUTE
SA	SUPPLY AIR
SD	SMOKE DETECTOR
SENS.	SENSIBLE
SF	SQUARE FOOT
SMACNA	SHEET METAL AND AIR CONDITIONING CONTRACTORS' NATIONAL ASSOCIATION
TS	TEMPERATURE SENSOR
TSP	TOTAL STATIC PRESSURE
(TYP.)	TYPICAL
U.O.N.	UNLESS OTHERWISE NOTED
V	VOLT
W	WATT
WB	WET BULB TEMPERATURE
WG	WATER GAUGE
WPD	WATER PRESSURE DROP

Revisions | Date

CONSULTANTS:

PACE COLLABORATIVE
MECHANICAL ELECTRICAL ENGINEERS
VIRGINIA BEACH, VA - 757-499-7223

COMMONWEALTH OF VIRGINIA
WILLIAM G. QUINN, JR.
Lic. No. 041704
5-15-12
PROFESSIONAL ENGINEER
11220

ARCHITECT:

INNOVATE Architecture • Interiors
441 WASHINGTON STREET PORTSMOUTH, VA 23704 (P) 757.393.9900 (F) 757.393.9907

Drawing Title: MECHANICAL LEGENDS, NOTES AND ABBREVIATIONS

Approved Project Director

Project Title: VETERAN'S ADMINISTRATION HOSPITAL - HIGH TECH CONFERENCE ROOM RENOVATION

Location: FAYETTEVILLE, NORTH CAROLINA

Date: 05 - 14 - 12 | Checked: KDS | Drawn: CGG

Project Number: 565-11-101

Building Number: 3

Drawing Number: MH001

Dwg. 21 of 36

Office of Construction and Facilities Management

Department of Veterans Affairs

VA FORM 08-6231

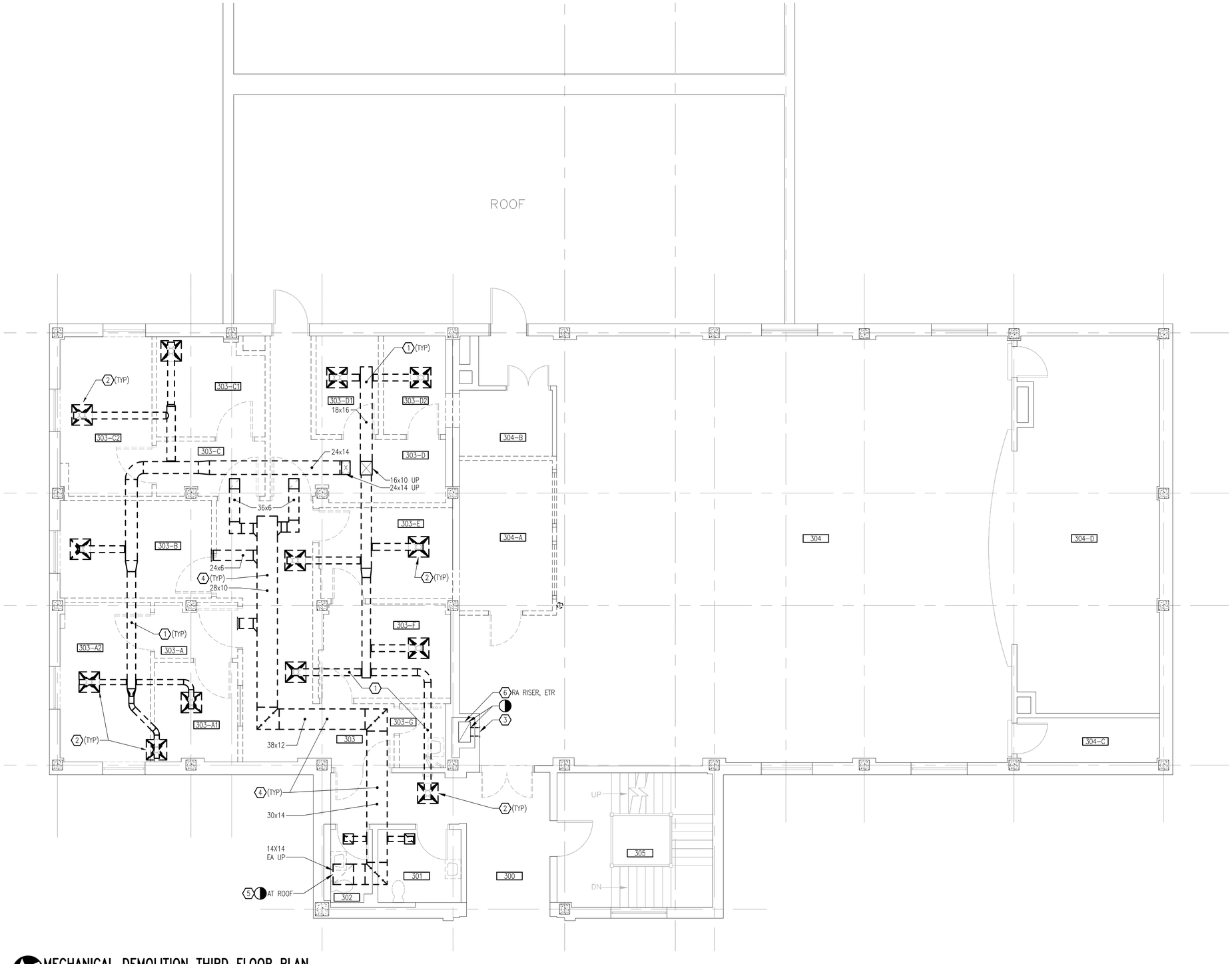

MECHANICAL DEMOLITION THIRD FLOOR PLAN

SCALE: 1/4" = 1'-0"

BUILDING #3

DEMOLITION NOTES

1. REMOVE DUCTWORK, INSULATION, HANGERS AND SUPPORTS COMPLETE.
2. REMOVE AIR TERMINAL DEVICES COMPLETE.
3. REMOVE RETURN REGISTER COMPLETE. REMOVE DUCT THROUGH WALL COMPLETE. REMOVE RETURN AIR RISER UP TO 10'-10" AFF. CAP RETURN AIR RISER AT BOTTOM AND SEAL AIRTIGHT. STORE REGISTER FOR REINSTALLATION.
4. REMOVE EXHAUST DUCTWORK, HANGERS, SUPPORTS AND GRILLES COMPLETE.
5. REMOVE EXHAUST DUCT RISER HANGERS AND SUPPORTS COMPLETE UP TO EXHAUST FAN ON ROOF.
6. RA RISER FROM 10'-10" A.F.F. IS ETR. SEE NOTE 3 THIS SHEET.

THIRD FLOOR DEMOLITION ROOM SCHEDULE

ROOM NUMBER	ROOM NAME
300	CORRIDOR
301	MALE TOILET
302	FEMALE TOILET
303	SOCIAL WORK SVC
303-A	ENTRY
303-A1	ADMIN OFFICE
303-A2	CHIEF SWS OFFICE
303-B	SOCIAL WORK OFFICE
303-C	ENTRY
303-C1	SOCIAL WORK OFFICE
303-C2	SOCIAL WORK OFFICE
303-D	CORRIDOR
303-D1	SOCIAL WORK OFFICE
303-D2	SOCIAL WORK OFFICE
303-E	INTERNS
303-F	SOCIAL WORK OFFICE
303-G	HOUSE KEEPING
304	AUDITORIUM
304-A	KITCHEN
304-B	STORAGE
304-C	STORAGE
304-D	STAGE
305	STAIR

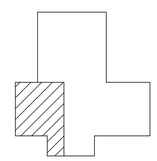

KEY PLAN

NO SCALE

BUILDING #3

Revisions:	Date

CONSULTANTS:

Pace COLLABORATIVE
MECHANICAL ELECTRICAL ENGINEERS
VIRGINIA BEACH, VA - 757-499-7223

COMMONWEALTH OF VIRGINIA
WILLIAM G. QUINN, JR.
Lic. No. 041704
5-15-12
PROFESSIONAL ENGINEER
11220

ARCHITECT:

INNOVATE
Architecture • Interiors
441 WASHINGTON STREET PORTSMOUTH, VA 23704 (P) 757.393.9900 (F) 757.393.9907

Drawing Title: MECHANICAL DEMOLITION THIRD FLOOR PLAN

Approved: Project Director

Project Title: VETERAN'S ADMINISTRATION HOSPITAL - HIGH TECH CONFERENCE ROOM RENOVATION

Location: FAYETTEVILLE, NORTH CAROLINA

Date: 05 - 14 - 12 | Checked: KDS | Drawn: CGG

Project Number: 565-11-101

Building Number: 3

Drawing Number: MD101

Dwg. 22 of 36

Office of Construction and Facilities Management

Department of Veterans Affairs

VA FORM 08-6231

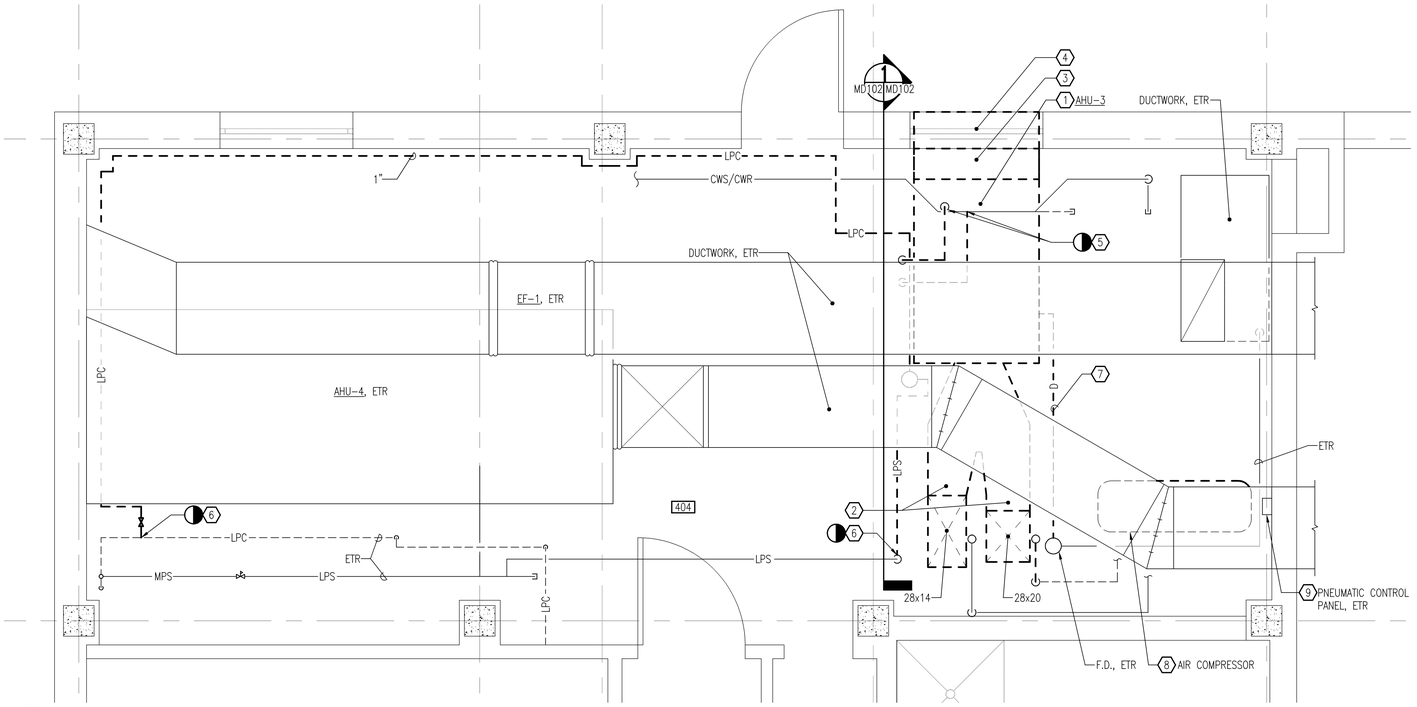

MECHANICAL EQUIPMENT, DUCTWORK, AND PIPING DEMOLITION FOURTH FLOOR PLAN

SCALE: 1/2" = 1'-0"

BUILDING #3

DEMOLITION NOTES

1. REMOVE AIR HANDLER, SUPPORTS AND CONDENSATE DRAIN PAN COMPLETE.
2. REMOVE DUCTWORK, INSULATION, HANGERS AND SUPPORTS COMPLETE FROM AIR HANDLER TO DUCT PENETRATION THRU FLOOR SLAB. REMOVE FIRE DAMPERS AT FLOOR SLAB.
3. REMOVE OUTSIDE AIR DUCTWORK, INSULATION, HANGERS AND SUPPORTS COMPLETE FROM OUTSIDE WALL TO AIR HANDLER. REMOVE DAMPER, PNEUMATIC ACTUATOR AND ASSOCIATED CONTROLS WIRING AND TUBING.
4. CLEAN OA AIR LOUVER AND REMOVE EXISTING MESH AND DUCT.
5. REMOVE CWS/CWR PIPING, INSULATION, HANGERS AND SUPPORTS COMPLETE FROM UNIT TO POINT INDICATED. CAP AND SEAL WATERFRONT.
6. REMOVE LPS/LPC PIPING, INSULATION, HANGERS, SUPPORTS AND ASSOCIATED VALVES AND SPECIALTIES COMPLETE BETWEEN THE POINTS OF DEMOLITION INDICATED.
7. REMOVE 1" CONDENSATE DRAIN PIPING COMPLETE.
8. REMOVE AIR COMPRESSOR AND STORE FOR REINSTALLATION.
9. REMOVE CONTROL WIRING AND TUBING ASSOCIATED WITH AHU-3 FROM PANEL TO ACTUATORS. CAP TUBING AT PANEL AND SEAL AIRTIGHT. CONTROLS VENDOR SHALL REPROGRAM PNEUMATIC CONTROL SYSTEM TO ELIMINATE CONTROL OF AHU-3.
10. REMOVE EXISTING EXHAUST FAN AND CONNECTING DUCTWORK COMPLETE. LEAVE ROOF CURB IN PLACE.

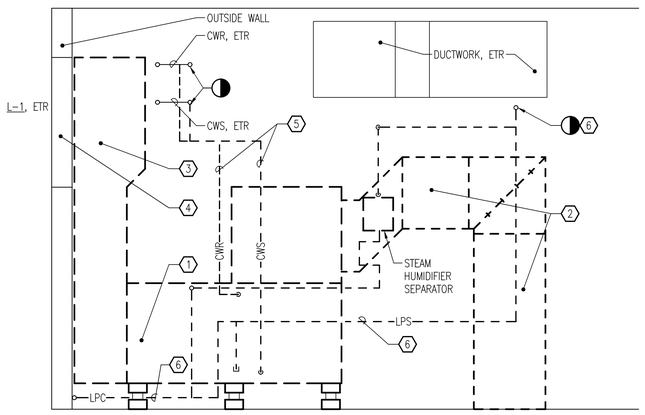

1 MECHANICAL DEMOLITION SECTION AT AHU-3

HD102 HD102 SCALE: 1/2" = 1'-0"

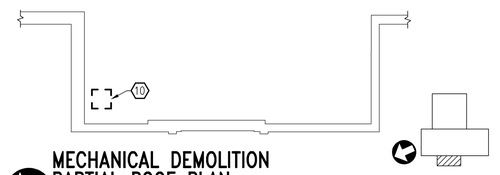

MECHANICAL DEMOLITION PARTIAL ROOF PLAN

SCALE: 1/8" = 1'-0"

FOURTH FLOOR ROOM SCHEDULE	
ROOM NUMBER	ROOM NAME
404	MECHANICAL

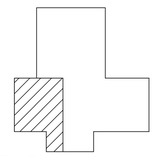

KEY PLAN

NO SCALE

BUIDLING #3

Revisions:	Date

CONSULTANTS:

Pacc COLLABORATIVE
MECHANICAL ELECTRICAL ENGINEERS
VIRGINIA BEACH, VA - 757-499-7223

COMMONWEALTH OF VIRGINIA
WILLIAM G. QUINN, JR.
Lic. No. 041704
5-15-12
PROFESSIONAL ENGINEER
11220

ARCHITECT:

INNOVATE Architecture ▪ Interiors
441 WASHINGTON STREET PORTSMOUTH, VA 23704 (P) 757.393.9900 (F) 757.393.9907

Drawing Title: MECHANICAL DEMOLITION FOURTH FLOOR PLAN

Approved: Project Director

Project Title: VETERAN'S ADMINISTRATION HOSPITAL - HIGH TECH CONFERENCE ROOM RENOVATION

Location: FAYETTEVILLE, NORTH CAROLINA

Date: 05 - 14 - 12 | Checked: KDS | Drawn: CGG

Project Number: 565-11-101

Building Number: 3

Drawing Number: MD102

Dwg. 23 of 36

Office of Construction and Facilities Management

Department of Veterans Affairs

VA FORM 08-6231

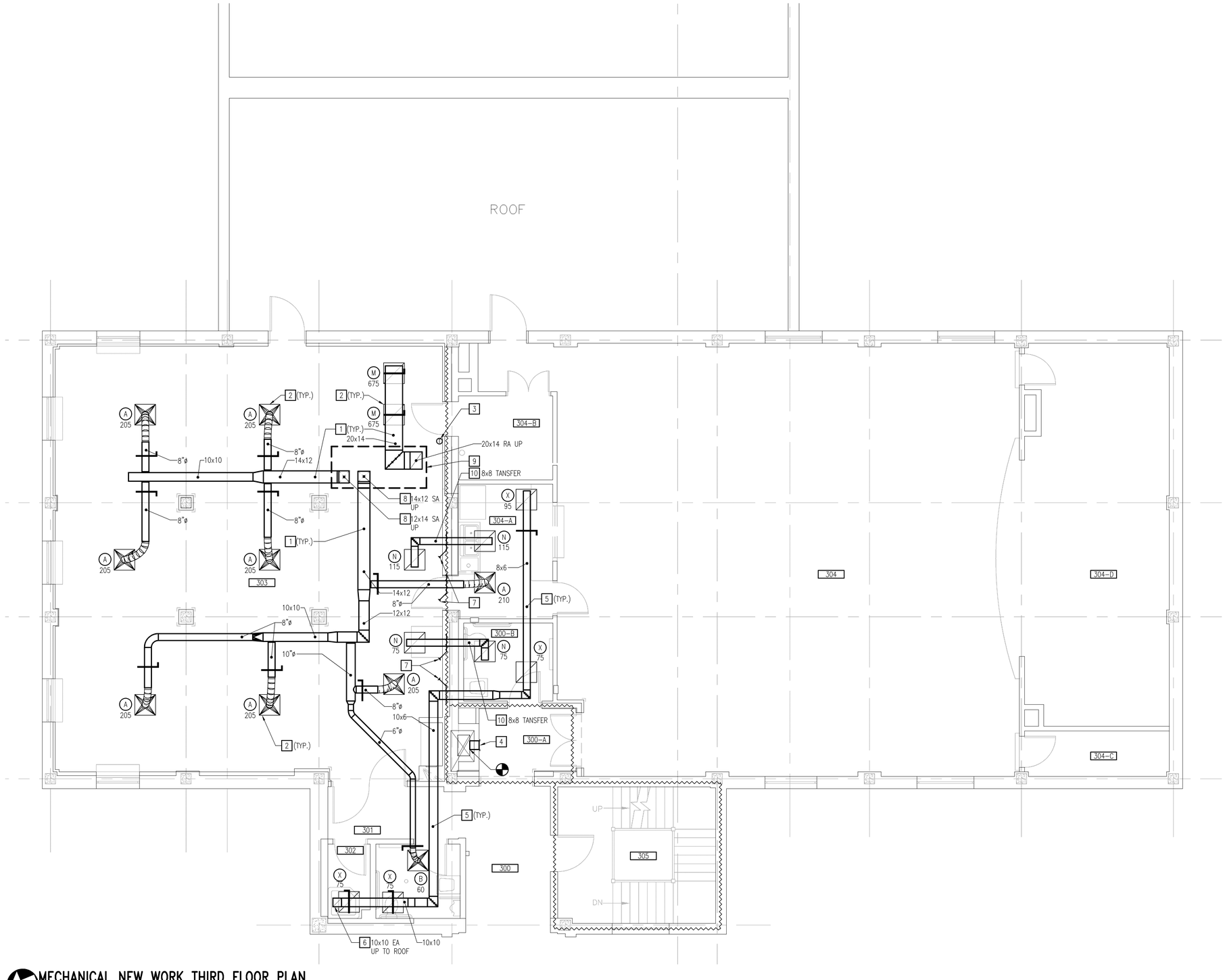

MECHANICAL NEW WORK THIRD FLOOR PLAN

SCALE: 1/4" = 1'-0"

BUILDING #3

NEW WORK NOTES

1. PROVIDE SUPPLY AND RETURN DUCTWORK, INSULATION, HANGERS AND SUPPORTS COMPLETE. SIZE AS INDICATED.
2. PROVIDE GRILLES, REGISTERS AND DIFFUSERS AS SCHEDULED.
3. PROVIDE TEMPERATURE SENSOR AND CONTROL WIRING. CONNECT TO DDC SYSTEM. MOUNT 48" A.F.F.
4. CLEAN 20"x36" RETURN REGISTER AND REINSTALL. PROVIDE INSULATED DUCTWORK AND CONNECT TO EXISTING RETURN AIR RISER IN CHASE. MOUNT BOTTOM OF REGISTER AT 11'-0" AFF.
5. PROVIDE UNINSULATED EXHAUST DUCTWORK, HANGERS AND SUPPORTS COMPLETE. SIZE AS INDICATED.
6. ROUTE EA DUCT UP TO ROOF. CONNECT TO EF-1 IN EXISTING WALL CHASE.
7. PROVIDE FIRE DAMPER AT FIREWALL PENETRATION. SEE DETAIL ON SHEET MH501.
8. SIZE DUCT THROUGH FLOOR TO MATCH EXISTING HOLE (HOLE IS LARGER THAN REQUIRED). TRANSITION AND CONNECT TO DUCT THROUGH STRUCTURAL FLOOR AS REQUIRED.
9. CLEARANCE ABOVE CEILING IS MINIMAL IN AREA NOTED. CONTRACTOR SHALL COORDINATE WITH OTHER TRADES. TWO 1" CONDUITS, 4 FT. LONG, MAY NEED TO BE RELOCATED TO PROVIDE CLEARANCE FOR NEW RETURN AIR DUCT.
10. PROVIDE TRANSFER DUCT. SIZE AS INDICATED.

THIRD FLOOR ROOM SCHEDULE

ROOM NUMBER	ROOM NAME
300	CORRIDOR
300-A	VESTIBULE
300-B	WOMENS TOILET
301	MALE TOILET
302	HOUSE KEEPING
303	NAVIGATION ROOM
304	AUDITORIUM
304-A	KITCHEN
304-B	STORAGE
304-C	STORAGE
304-D	STAGE
305	STAIR

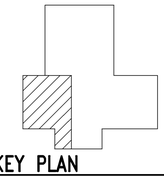

KEY PLAN

NO SCALE

BUIDLING #3

Revisions:	Date

CONSULTANTS:

PACE COLLABORATIVE
MECHANICAL ELECTRICAL ENGINEERS
VIRGINIA BEACH, VA - 757-499-7223

COMMONWEALTH OF VIRGINIA
WILLIAM G. QUINN, JR.
Lic. No. 041704
5-15-12
PROFESSIONAL ENGINEER
11220

ARCHITECT:

INNOVATE Architecture • Interiors
441 WASHINGTON STREET PORTSMOUTH, VA 23704 (P) 757.393.9900 (F) 757.393.9907

Drawing Title: MECHANICAL NEW WORK THIRD FLOOR PLAN

Approved Project Director:

Project Title: VETERAN'S ADMINISTRATION HOSPITAL - HIGH TECH CONFERENCE ROOM RENOVATION

Location: FAYETTEVILLE, NORTH CAROLINA

Date: 05 - 14 - 12 | Checked: KDS | Drawn: CGG

Project Number: 565-11-101

Building Number: 3

Drawing Number: MH101

Dwg. 24 of 36

Office of Construction and Facilities Management

Department of Veterans Affairs

VA FORM 08-6231

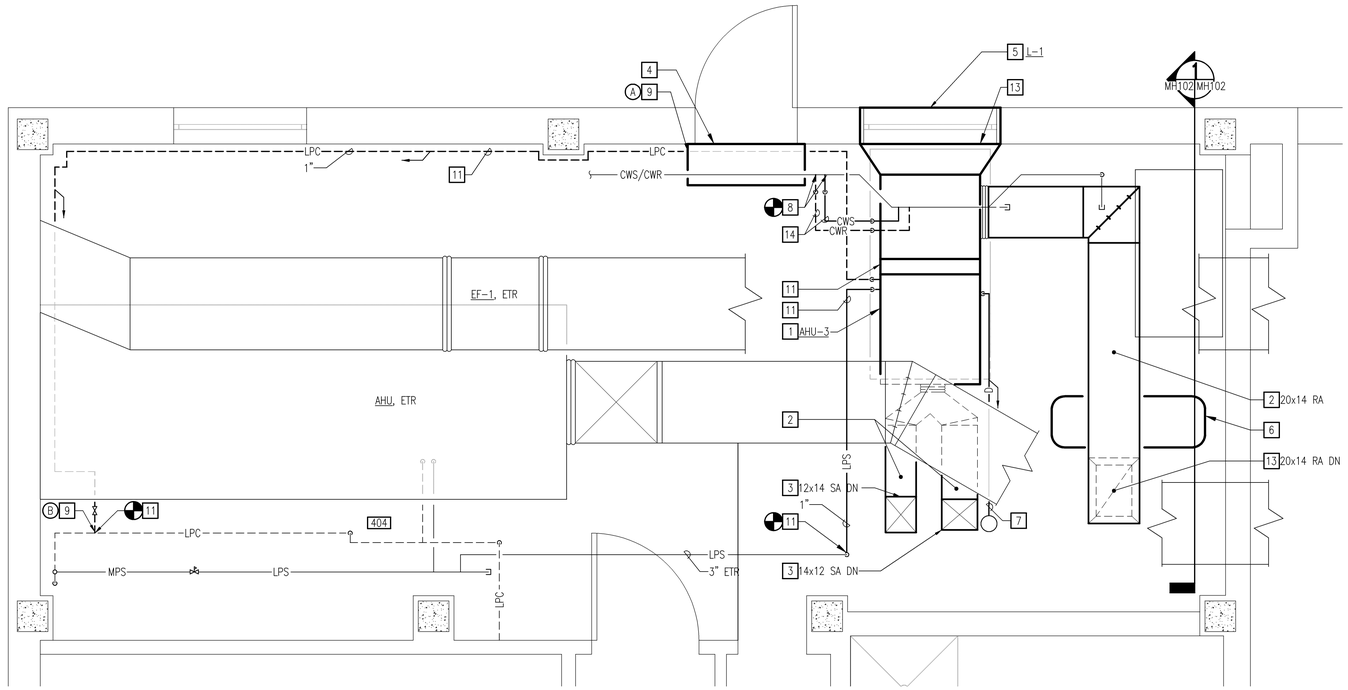

MECHANICAL EQUIPMENT, DUCTWORK, AND PIPING NEW WORK FOURTH FLOOR PLAN

SCALE: 1/2" = 1'-0"

BUILDING #3

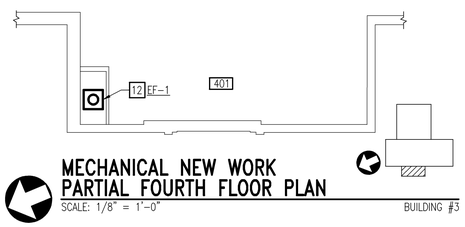

MECHANICAL NEW WORK PARTIAL FOURTH FLOOR PLAN

SCALE: 1/8" = 1'-0"

BUILDING #3

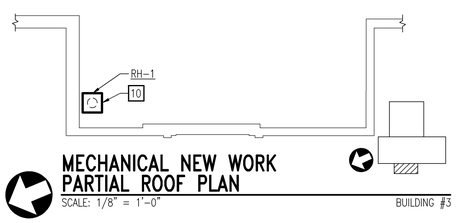

MECHANICAL NEW WORK PARTIAL ROOF PLAN

SCALE: 1/8" = 1'-0"

BUILDING #3

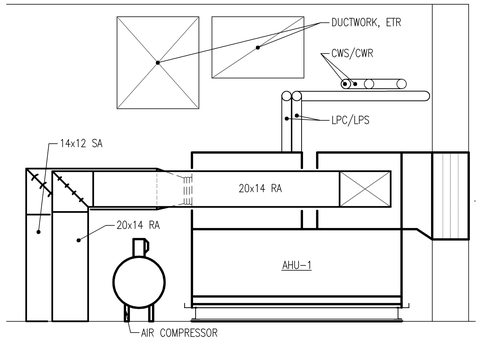

1 MECHANICAL SECTION

MH102 MH102 SCALE: 1/2" = 1'-0"

BUILDING #3

FOURTH FLOOR ROOM SCHEDULE

ROOM NUMBER	ROOM NAME
404	MECHANICAL
401	LOUNGE/LURS

NEW WORK NOTES

1. PROVIDE AHU AS SCHEDULED. PROVIDE FLEXIBLE CONNECTIONS AT ALL DUCT CONNECTIONS. PROVIDE MANUFACTURER'S BASE RAILS WITH CONTINUOUS NEOPRENE PAD VIBRATION ISOLATORS ABOVE AND BELOW RAILS. PROVIDE EMERGENCY DRAIN PAN WITH MOISTURE SENSOR CAPABLE OF SHUTTING DOWN UNIT UPON DETECTION OF MOISTURE. MOUNT ENTIRE UNIT INSIDE OF DRAIN PAN. SEE EMERGENCY DRAIN PAN DETAIL ON SHEET H501.
2. PROVIDE INSULATED DUCTWORK, HANGERS AND SUPPORTS COMPLETE. PROVIDE FLEXIBLE CONNECTION AT AHU. SIZE AS INDICATED.
3. PROVIDE DUCT TO EXTEND THRU STRUCTURAL FLOOR, SIZED AS REQUIRED TO MATCH EXISTING HOLE, LARGER OR SMALLER THRU STRUCTURAL FLOOR. TRANSITION AND CONNECT TO DUCT FROM UNIT. PROVIDE SUPPORTS AT FLOOR AND SEAL WITH FIREPROOFING MATERIAL AS PER DUCT RISER SUPPORTS DETAIL ON SHEET MH501.
4. PROVIDE STAIR ASSEMBLY OF HEAVY DUTY ALUMINUM CONSTRUCTION, CAPABLE OF SUPPORTING 600 LBS. STAIR TREAD SHALL BE NON-SLIP ALUMINUM GRATING AND SHALL EXTEND 3" BEYOND DOOR FRAME ON EACH SIDE. STAIR ASSEMBLY SHALL ALLOW STEAM CONDENSATE PIPE TO BE ROUTED UNDERNEATH. STAIR ASSEMBLY SHALL BE AFFIXED SECURELY AND PERMANENTLY TO THE FLOOR SLAB. SEE DETAIL ON SHEET MH501.
5. CLEAN EXISTING LOUVER, APPROX. 55"x34" AND PROVIDE BIRDSCREEN. PROVIDE 12" DEEP INSULATED PLENUM FULL SIZE OF LOUVER AND CONNECT TO AHU-3.
6. RELOCATE AIR COMPRESSOR TO CLEAR NEW RA DUCT BY MIN. 3". LEVEL DEPRESSION IN FLOOR PER ARCHITECTURAL DRAWINGS BEFORE REINSTALLING COMPRESSOR. SEE ARCHITECTURAL SPECIFICATIONS FOR INSTRUCTIONS ON LEVELING FLOOR.
7. PROVIDE CONDENSATE DRAIN PIPING FOR AHU-3. TRAP DRAIN AT UNIT. SEE DETAIL ON SHEET H500. ROUTE TO NEAREST FLOOR DRAIN.
8. PROVIDE CWS/CWR PIPING, INSULATION, HANGERS AND SUPPORTS COMPLETE. SIZE AS INDICATED CONNECT AT POINT INDICATED.
9. CENTERLINE OF EXISTING LPC PIPING AT POINT (B) IS APPROX. 5-1/2" AFF. LOCATE NEW LPC PIPING AT POINT (A) AS HIGH AS POSSIBLE UNDER STAIR TREAD SO THERE IS A DOWNWARD SLOPE FROM (A) TO (B).
10. PROVIDE ROOF HOOD FOR EXHAUST FAN EF-1. PROVIDE CURB ADAPTER AND MOUNT ON EXISTING CURB. PROVIDE 1/2" SQUARE WIRE MESH.
11. PROVIDE INSULATED LPS/LPC PIPING, HANGERS AND SUPPORTS COMPLETE SIZE AS INDICATED.
12. PROVIDE EXHAUST FAN AS SCHEDULED, COMPLETE WITH MOUNTING, SUPPORTS AND VIBRATION ISOLATORS. PROVIDE FLEXIBLE CONNECTORS AT DUCT CONNECTIONS. MOUNT TOP OF FAN IN CHASE APPROX. 1'-0" BELOW FINISHED CEILING HEIGHT. COORDINATE LOCATION OF FAN WITH ACCESS DOOR LOCATION. PROVIDE FIRE- RATED, KEY-LOCK ACCESS DOOR IN CHASE, 24"x24" OR LARGER AS REQUIRED TO ALLOW MAINTENANCE AND REMOVAL OF FAN THROUGH DOOR. SEE ARCHITECTURAL SHEETS FOR STUD AND WALL REQUIREMENTS. PROVIDE 3 KEYS WITH ACCESS DOOR LOCK.
13. COORDINATE LOCATION OF HOLE THROUGH SLAB WITH EXISTING STRUCTURE SO AS NOT TO CUT THROUGH ANY CONCRETE BEAM OR JOIST UNDERNEATH.
14. ROUTE CWS/CWR PIPING HIGH TO UNDERSIDE OF EXISTING DUCT.

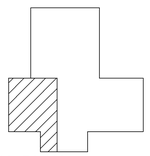

KEY PLAN

NO SCALE

BUIDLING #3

Revisions	Date

CONSULTANTS:

PACC COLLABORATIVE
MECHANICAL ELECTRICAL ENGINEERS
VIRGINIA BEACH, VA - 757-499-7223

COMMONWEALTH OF VIRGINIA
WILLIAM G. QUINN, JR.
Lic. No. 041704
5-15-12
PROFESSIONAL ENGINEER
11220

ARCHITECT:

INNOVATE Architecture ▪ Interiors
441 WASHINGTON STREET PORTSMOUTH, VA 23704 (P) 757.393.9900 (F) 757.393.9907

Drawing Title: MECHANICAL EQUIPMENT, DUCTWORK AND PIPING NEW WORK FOURTH FLOOR PLANS AND PARTIAL MECHANICAL ROOF PLANS

Approved: Project Director

Project Title: VETERAN'S ADMINISTRATION HOSPITAL - HIGH TECH CONFERENCE ROOM RENOVATION

Location: FAYETTEVILLE, NORTH CAROLINA

Date: 05 - 14 - 12 | Checked: KDS | Drawn: CGQ

Project Number: 565-11-101

Building Number: 3

Drawing Number: MH102

Dwg. 25 of 36

Office of Construction and Facilities Management

Department of Veterans Affairs

VA FORM 08-6231

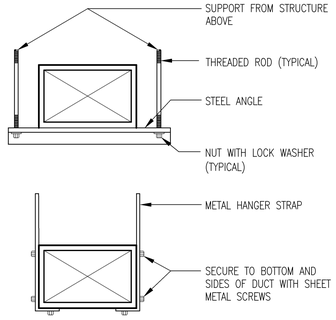

NOTE: FOR ANGLE SIZE AND HANGER STRAP GAUGE, SEE SMACNA LOW PRESSURE DUCT CONSTRUCTION STANDARDS.

DUCT SUPPORT DETAIL

NTS

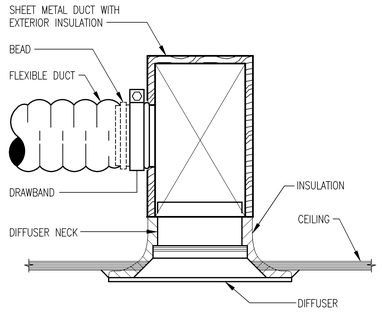

INSTALL PER THIS DETAIL WHERE SPACE ABOVE CEILING IS LIMITED

NTS

CEILING DIFFUSER INSTALLATION DETAIL

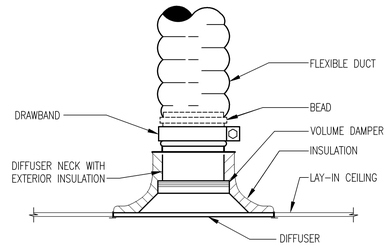

TYPICAL INSTALLATION DETAIL

NTS

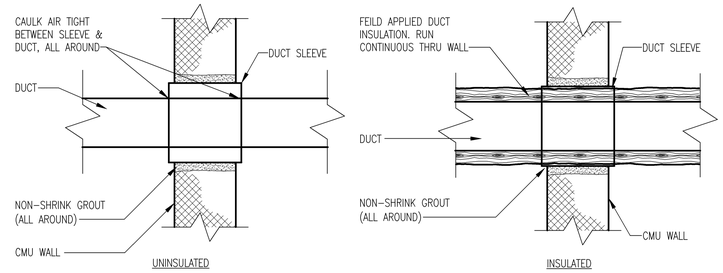

DUCT PENETRATION DETAIL (TYPICAL)

NTS

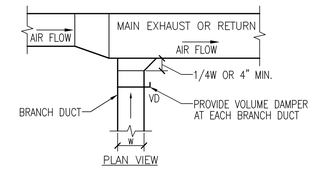

EXHAUST OR RETURN BRANCH DUCTWORK

NTS

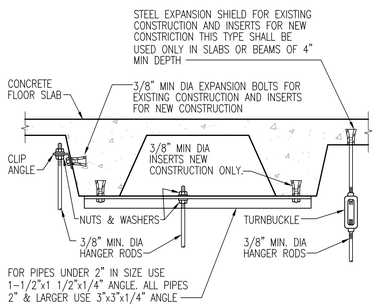

SECURING HANGER RODS IN CONCRETE

NTS

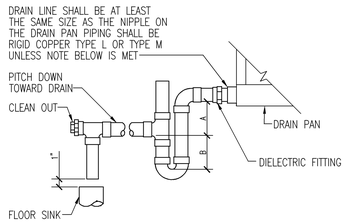

NOTE:

1. CPVC PIPE MAY BE USED ONLY IF APPROVED BY LOCAL VA AND IS INDOORS AND DOES NOT PASS THROUGH RATED BARRIERS.
2. DIELECTRIC FITTING TO BE USED WHEN TWO DISSIMILAR METALS ARE TO BE CONNECTED.

UNIT TYPE	A	B
DRAW THRU	2" PLUS X	X
BLOW THRU	1" MINIMUM	2X

WHERE X = STATIC PRESSURE IN PAN

AIR HANDLING UNIT DRAIN TRAP DETAIL

NTS

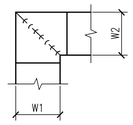

NOTE:

1. ALL VANE ELBOWS SHALL BE CONSTRUCTED AND INSTALLED AS DETAILED BY SMACNA.
2. WHEN W1 DOES NOT EQUAL W2, VANE SHALL BE SINGLE THICKNESS VANE TYPE REGARDLESS OF W DIMENSION.
3. ALL SINGLE THICKNESS VANES SHALL HAVE A 2" RADIUS, 1 1/2" MAXIMUM SPACE BETWEEN VANES AND A 3/4" TRAILING EDGE.
4. WHEN W EQUALS W2 AND W1 IS GREATER THAN 20" VANES SHALL BE DOUBLE VANE TYPE.

DUCTWORK SQUARE VANE ELBOWS

NTS

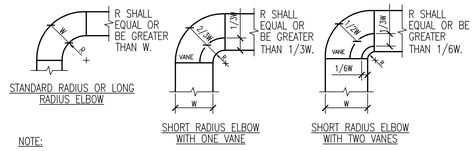

NOTE:

1. THE INTERIOR SURFACE OF ALL RADIUS ELBOWS SHALL BE MADE ROUND.
2. ALL STANDARD RADIUS ELBOWS CAN BE SUBSTITUTED WITH SHORT RADIUS ELBOWS. ALL SHORT RADIUS ELBOWS SHALL HAVE VANES. VANES SHALL BE CONSTRUCTED, SUPPORTED AND FASTENED AS RECOMMENDED BY SMACNA.

DUCTWORK RADIUS ELBOWS

NTS

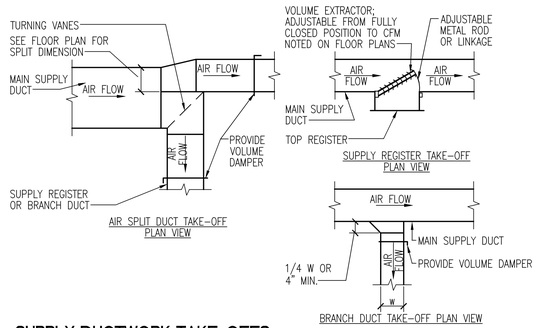

SUPPLY DUCTWORK TAKE-OFFS

NTS

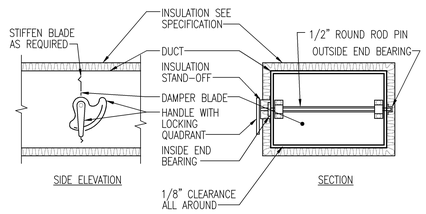

NOTE:

1. DELETE INSULATION STAND-OFF ON DUCTWORK WITHOUT EXTERIOR INSULATION.
2. DETAIL SHOWS SINGLE BLADE DAMPER. DAMPER INSTALLATION SHALL BE SIMILAR FOR MULTI-BLADE DAMPERS & ROUND DAMPERS.

VOLUME DAMPER DETAIL

NTS

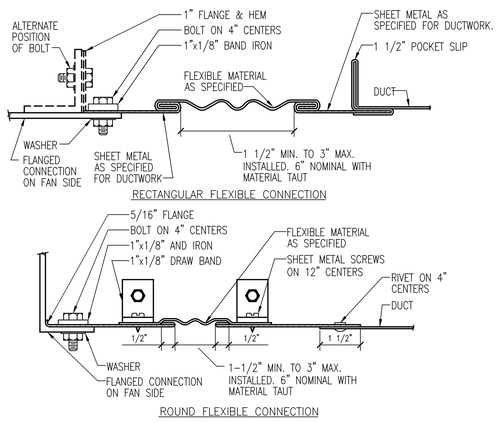

FLEXIBLE DUCT CONNECTIONS

NTS

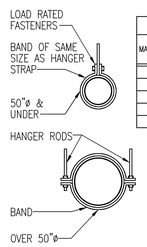

HANGER STRAPS OR RODS			
MAX. DUCT ø IN.	QUANTITY/SIZE IN.	MAX. LOAD LBS.	MAX. SPACING IN.
26	ONE 1 x 22 GA STRAP	260	144
36	ONE 1 x 18 GA STRAP	420	144
50	ONE 1 x 16 GA STRAP	700	144
60	TWO 3/8ø. RODS	1320	144
84	TWO 1/2ø RODS	2500	144

NOTE:
TABULATED DATA FROM SMACNA ALLOWS FOR DUCT REINFORCING AND INSULATION, BUT NO EXTERNAL LOAD.

ROUND DUCT HANGERS

NTS

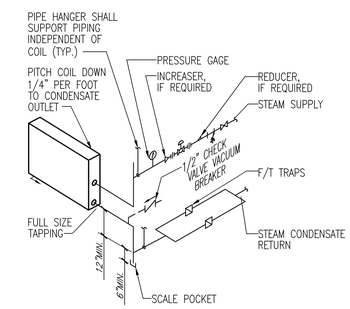

STEAM COIL - PIPING CONNECTIONS

NTS

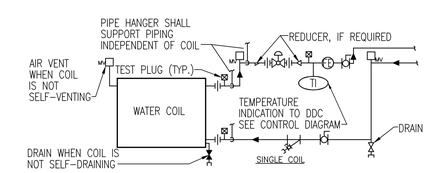

WATER COILS - PIPING CONNECTIONS

NTS

Revisions:	Date

CONSULTANTS:

Pace COLLABORATIVE
MECHANICAL ELECTRICAL ENGINEERS
VIRGINIA BEACH, VA - 757-499-7223

COMMONWEALTH OF VIRGINIA
WILLIAM G. QUINN, JR.
Lic. No. 041704
5-15-12
PROFESSIONAL ENGINEER
11220

ARCHITECT:

INNOVATE Architecture • Interiors
441 WASHINGTON STREET PORTSMOUTH, VA 23704 (P) 757.393.9900 (F) 757.393.9907

Drawing Title: MECHANICAL DETAILS

Approved Project Director:

Project Title: VETERAN'S ADMINISTRATION HOSPITAL - HIGH TECH CONFERENCE ROOM RENOVATION

Location: FAYETTEVILLE, NORTH CAROLINA

Date: 05 - 14 - 12 | Checked: KDS | Drawn: CGG

Project Number: 565-11-101

Building Number: 3

Drawing Number: MH500

Dwg. 26 of 36

Office of Construction and Facilities Management

Department of Veterans Affairs

VA FORM 08-6231

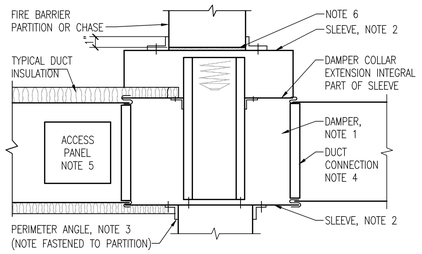

NOTE:

1. A VERTICAL DAMPER IS SHOWN. HORIZONTAL DAMPER INSTALLATION, 1S SIMILAR. FOLLOW DAMPER MANUFACTURER'S INSTRUCTIONS, INCLUDING FASTENER OPTIONS AND GAGES FOR SLEEVE AND PERIMETER ANGLES. FIRE DAMPERS MUST BE INSTALLED IN THE PARTITION OR FLOOR AND NOT OUTSIDE THE PENETRATION.
2. GALVANIZED SLEEVE: GAGE NOT LESS THAN CONNECTING DUCT. FASTEN SLEEVE TO DAMPER FRAME AND TO PERIMETER ANGLES.
3. PERIMETER ANGELS: GALVANIZED STEEL, NOT LESS THAN 1 1/2"x1 1/2", 14 GAGE, TO PROVIDE 1" MINIMUM OVERLAP OF OPENING ON ALL 4 SIDES.
4. BREAKAWAY DUCT CONNECTION: CONTRACTOR'S OPTION OF TYPES SHOWN IN SMACNA. ACCESS PANELS: SIZE AND LOCATION TO PERMIT SERVICING THE FUSIBLE LINK OR LINKS.
5. PROVIDE 1/4" TO 1/2" CLEARANCE ON HEIGHT AND WIDTH. FILL OPEN SPACE WITH ROCK WOOL FIRESTOP FIBER.
6. ALL DUCT WORK RISERS WHICH ARE RUN EXPOSED, SUCH AS THRU ATTIC FLOORS AND MECHANICAL ROOM FLOORS, SHALL BE PROVIDED WITH 3" HIGH CONCRETE CURB AROUND OPENING FOR DUCT.

SECTION THRU FIRE DAMPER INSTALLATION

NO SCALE

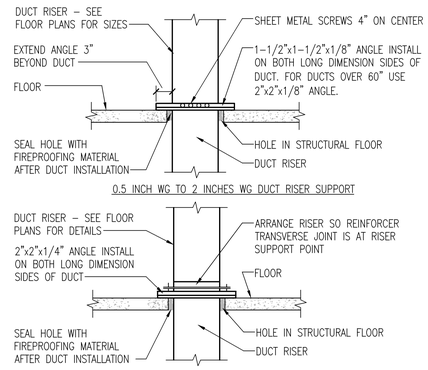

NOTE:
ALL DUCT WORK RISERS WHICH ARE RUN EXPOSED, SUCH AS THRU ATTIC FLOORS AND FAN ROOM FLOORS SHALL BE PROVIDED WITH A 3" HIGH CONCRETE CURB AROUND OPENING FOR DUCT.

DUCT RISER SUPPORTS

NO SCALE

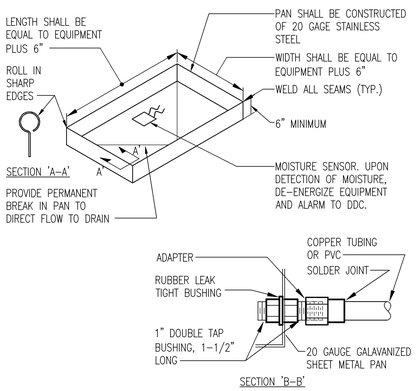

EMERGENCY DRAIN PAN DETAIL

NO SCALE

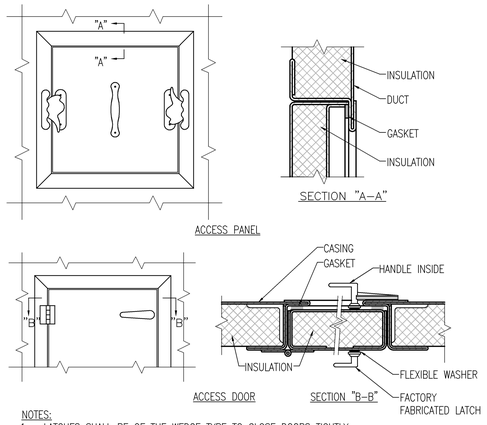

NOTES:
1. LATCHES SHALL BE OF THE WEDGE TYPE TO CLOSE DOORS TIGHTLY.
2. HINGES ON THE ACCESS DOORS SHALL HAVE NON–CORROSIVE PINS.
3. SEE SMACNA 2005, FIGURE 9–15

ACCESS PANEL AND DOOR DETAIL

NO SCALE

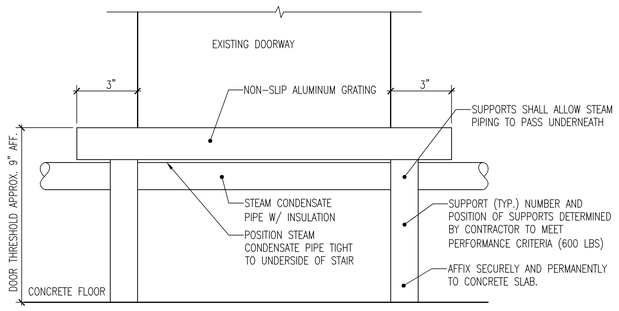

STAIR ASSEMBLY DETAIL

NO SCALE

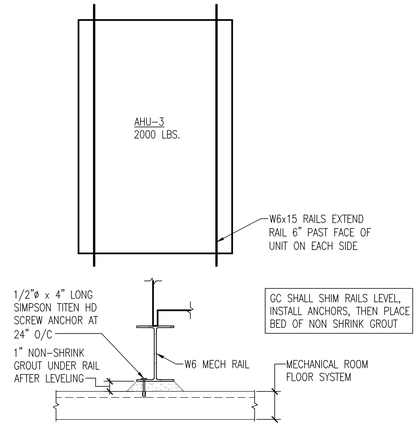

AIR HANDLING UNIT MOUNTING DETAIL

NO SCALE

NOTE: SEE EMERGENCY DRAIN PAN DETAIL AND AIR HANDLING UNIT MOUNTING DETAIL THIS SHEET FOR ADDITIONAL INFORMATION.

AIR HANDLING UNIT INSTALLATION W/ EMERGENCY DRAIN PAN

NO SCALE

Revisions:	Date

CONSULTANTS:

PACC COLLABORATIVE
MECHANICAL ELECTRICAL ENGINEERS
VIRGINIA BEACH, VA - 757-499-7223

COMMONWEALTH OF VIRGINIA
WILLIAM G. QUINN, JR.
Lic. No. 041704
5-15-12
PROFESSIONAL ENGINEER
11220

ARCHITECT:

INNOVATE Architecture ▪ Interiors
441 WASHINGTON STREET PORTSMOUTH, VA 23704 (P) 757.393.9900 (F) 757.393.9907

Drawing Title: MECHANICAL DETAILS	Project Title: VETERAN'S ADMINISTRATION HOSPITAL - HIGH TECH CONFERENCE ROOM RENOVATION		Project Number: 565-11-101
Approved: Project Director			Building Number: 3
	Location: FAYETTEVILLE, NORTH CAROLINA		Drawing Number: MH501
	Date: 05 - 14 - 12	Checked: KDS / Drawn: CGG	Dwg. 27 of 36

Office of Construction and Facilities Management
Department of Veterans Affairs

VA FORM 08–6231

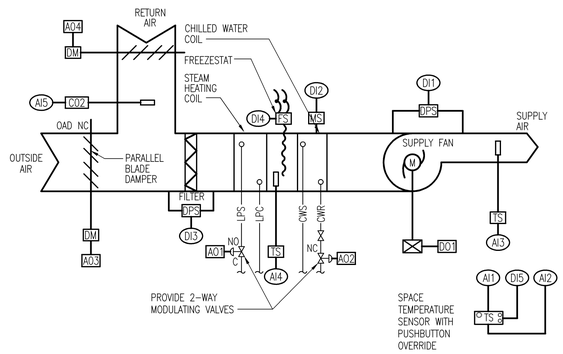

CONSTANT VOLUME AHU CONTROL DIAGRAM (AHU-3)

NO SCALE

AHU-3		
LOCAL DDC CONTROLLER		
INPUTS		
ANALOG	AI1	SPACE TEMPERATURE
	AI2	SPACE TEMPERATURE SETPOINT
	AI3	SUPPLY AIR TEMPERATURE
	AI4	HW COIL DISCHARGE AVERAGE
	AI5	CO2 SENSOR
DIGITAL	DI1	SUPPLY AIR FAN STATUS
	DI2	MOISTURE SENSOR
	DI3	DIRTY FILTER
	DI4	FREEZESTAT
	DI5	UNOCCUPIED OVERRIDE
OUTPUTS		
ANALOG	AO1	STEAM HEATING VALVE CONTROL
	AO2	CW VALVE CONTROL
	AO3	OUTSIDE AIR DAMPER CONTROL
	AO4	RETURN AIR DAMPER CONTROL
DIGITAL	DO1	SUPPLY AIR FAN START

SEQUENCE OF OPERATION

OCCUPIED MODE: WHEN THE SYSTEM IS INDEXED TO OCCUPIED OR SYSTEM IS MANUALLY INDEXED FROM UNOCCUPIED TO OCCUPIED MODE BY OVERRIDE BUTTON INTEGRAL TO SPACE TEMPERATURE SENSOR, THE RESPECTIVE CONTROL VALVE SHALL MODULATE TO MAINTAIN RESPECTIVE PROGRAMMED TEMPERATURE SETTINGS (75°F COOLING, 70°F HEATING, ADJUSTABLE). THE SUPPLY FAN SHALL RUN CONTINUOUSLY. THE OUTSIDE AIR DAMPER SHALL MODULATE OPEN TO MAINTAIN IN LESS THAN 1100 PPM (ADJUSTABLE) C02 IN RETURN AIR STREAM.

UNOCCUPIED MODE: WHEN THE SYSTEM IS INDEXED TO UNOCCUPIED, THE RESPECTIVE CONTROL VALVE SHALL MODULATE TO MAINTAIN THE RESPECTIVE PROGRAMMED TEMPERATURE SETTINGS (80°F, ADJUSTABLE, COOLING, 60°F, ADJUSTABLE HEATING). THE SUPPLY FAN SHALL CYCLE WITH THE UNIT. THE OUTSIDE AIR DAMPER SHALL BE CLOSED.

COOLING–OCCUPIED: IF SPACE TEMPERATURE RISES ABOVE THE SETPOINT (75°F, ADJUSTABLE), THE 2–WAY CHILLED WATER VALVE SHALL MODULATE TO MAINTAIN SETPOINT. WHEN THE SPACE TEMPERATURE DROPS BELOW THE SETPOINT, THE OPPOSITE SHALL OCCUR.

HEATING–OCCUPIED: IF SPACE TEMPERATURE DROPS BELOW THE SETPOINT (70°F, ADJUSTABLE), THE 2–WAY PRIMARY STEAM VALVE SHALL MODULATE TO MAINTAIN SETPOINT. WHEN THE SPACE TEMPERATURE RISES ABOVE THE SETPOINT, THE OPPOSITE SHALL OCCUR.

FREEZE PROTECTION: IF MIXED AIR TEMPERATURE FALLS BELOW 40°F DURING HEATING MODE, THE FREEZESTAT SHALL CLOSE THE OUTSIDE AIR DAMPER, DE–ENERGIZE THE AHU SUPPLY AIR FAN AND FULLY OPEN THE STEAM AND CHILLED WATER VALVES TO COIL.

MORNING WARM–UP: THE UNIT SHALL EMPLOY OPTIMUM START. PRIOR TO OCCUPIED STATUS, THE UNIT SHALL GO INTO MORNING WARM–UP. AHU CW COIL CONTROL VALVE SHALL BE CLOSED TO THE COIL. THE SUPPLY FAN SHALL BE ENERGIZED AND THE STEAM VALVE SHALL BE FULLY OPEN TO THE COIL UNTIL OCCUPIED SPACE TEMPERATURE SETPOINT IS ACHIEVED. THE UNIT SHALL THEN CYCLE TO MAINTAIN SPACE OCCUPIED TEMPERATURE SETPOINT.

MORNING COOL–DOWN: THE UNIT SHALL EMPLOY OPTIMUM START. PRIOR TO OCCUPIED STATUS, THE UNIT SHALL GO INTO MORNING COOL–DOWN. THE OA DAMPER SHALL FULLY CLOSE, THE SUPPLY FAN SHALL BE ENERGIZED, THE CW VALVE SHALL MODULATE TO MAINTAIN A 55°F LEAVING AIR TEMPERATURE AND THE STEAM VALVE SHALL BE FULLY CLOSED TO THE COIL. ONCE OCCUPIED SPACE TEMPERATURE IS ACHIEVED, THE SUPPLY FAN SHALL CYCLE TO MAINTAIN OCCUPIED SETPOINT UNTIL OCCUPIED MODE IS INITIATED.

ALARMS: ALARM FOR DIRTY FILTER: WHEN PRESSURE DROP EXCEEDS 0.5" WG ABOVE INITIAL PRESSURE DROP. ALARM IF LEAVING AIR TEMPERATURE EXCEEDS 60°F IN COOLING MODE OR DROPS BELOW 50°F IN HEATING MODE. ALARM IF SUPPLY FAN FAILS TO START OR FAILS DURING OPERATION.

AIR HANDLING UNIT SCHEDULE

		SUPPLY FAN DATA							MAX. SOUND POWER AT UNIT DISCHARGE					STEAM HEATING COIL DATA							CHILLED WATER COOLING COIL DATA										
							ELECTRICAL DATA		DB (RE: 10–12 WATTS) OCTAVE BAND CENTER FREQUENCY									TRAP CAPACITY													
TAG	TYPE	S.A. C.F.M. (MAX./MIN.)	O.A. C.F.M.	E.S.P. (IN. WG.)	H.P.	FAN TYPE	VOLTS	PHASE	63	125	250	500	1000	AIRFLOW (CFM)	TOTAL CAPACITY (MBH)	EAT (°F)	LAT (°F)	CONTROL VALVE (LBS/HR)	(LBS/HR)	PRESSURE DROP (PSIG)	TOTAL CAPACITY M.B.H.	SENS. CAPACITY M.B.H.	E.D.B. (°F)	E.W.B. (°F)	E.W.T. (°F)	L.D.B.	L.W.B.	L.W.T. (°F)	G.P.M.	MAX. A.P.D. (IN. WG.)	MAX. W.P.D. (FT. WG.)	REMARKS
AHU–3	CV	1705	355	1.80	2	FC	208	3	92	87	86	87	86	1705	61.8	58.1	91.7	69.0	172.5	5	66.8	42.3	79.0	66.3	44	52.7	52.4	54.1	13.7	0.62	2.5	SEE NOTES

NOTES:
1. LEAVING AIR TEMPERATURE IS TO BE PROVIDED AT THE UNIT DISCHARGE, TOTAL & SENSIBLE CAPACITIES ARE "NET" VALUES TO BE PROVIDED DOWNSTREAM OF THE SUPPLY AIR FAN.
2. PROVIDE WITH MOTOR STARTER SIZED IN ACCORDANCE WITH NEMA RECOMMENDATIONS.
3. PROVIDE WITH THE FOLLOWING SECTIONS: OUTSIDE AIR DAMPER, RETURN AIR DAMPER, MIXING BOX, FLAT FILTER, STEAM HEATING COIL, COOLING COIL, FAN.
4. SELECTION BASED ON YORK/JCI.

HVAC DESIGN DATA

OUTDOOR DESIGN TEMPERATURES		DESIGN ALTITUDE		
SUMMER DB	94	242 FT		
SUMMER WB	73			
WINTER DB	21			
INDOOR DESIGN CONDITIONS		SUMMER		WINTER
		DB	%RH	DB
CONFERENCE ROOM		75	50	70
KITCHEN		75	50	70
CORRIDORS		75	50	70

GRILLE, REGISTER & DIFFUSER SCHEDULE

TAG	TYPE	SERVICE	C.F.M. RANGE	NECK SIZE	MAX. P.D.	MANUFACTURER/ MODEL NO.	REMARKS
A	DIFFUSER	SUPPLY	205 – 210	8"	0.1	TMS–AA	SUITABLE FOR LAY–IN CEILING, 24"X24" PANEL
B	DIFFUSER	SUPPLY	60	6"	0.1	TMS–AA	SUITABLE FOR LAY–IN CEILING, 24"X24" PANEL
M	REGISTER	RETURN	675	18" X 18"	0.1	350FL	SUITABLE FOR LAY–IN CEILING, 24"X24" PANEL
X	GRILLE	EXHAUST	75–95	6" X 6"	0.1	350FL	SUITABLE FOR LAY–IN CEILING, 24"X24" PANEL
N	GRILLE	TRANSFER	75–115	8 "x 8"	0.1	350FL	SUITABLE FOR LAY–IN CEILING, 24"X24" PANEL

THE FOLLOWING NOTES ARE TYPICAL UNLESS OTHERWISE NOTED:
1. SELECTIONS BASED ON TITUS.
2. PROVIDE ALUMINUM DIFFUSERS AND REGISTERS WITH OPPOSED BLADE VOLUME DAMPERS, BAKED STANDARD WHITE ENAMEL FINISH (INCLUDING HEAD OF SCREWS), MAXIMUM NC=25 AT HIGHEST CFM AND PROVIDE SQUARE TO ROUND TRANSITION AS REQUIRED.
3. PROVIDE 4–WAY PATTERN CEILING DIFFUSERS, U.O.N. ON PLANS OR SCHEDULE.
4. MAXIMUM PRESSURE DROP SHALL INCLUDE VOLUME DAMPER WHERE DAMPER IS PROVIDED.

FAN SCHEDULE

TAG	LOCATION	FAN TYPE	C.F.M.	E.S.P. (IN. WG.)	DRIVE	H.P.	VOLTS	PHASE	MODEL NO.	REMARKS
EF–1	4TH FLR DUCT CHASE	INLINE	320	0.38	DIRECT	1/6	115	1	5X085RC	SEE NOTES

NOTES:
1. SELECTION BASED ON PENNBARRY.
2. PROVIDE DIRECT DRIVE FANS WITH ELECTRONIC SPEED CONTROLLER.
3. PROVIDE WITH CHATTERPROOF BDD, INTEGRAL ELECTRIC DISCONNECT, DUCT FLANGES AND 4 POINT VIBRATION HANGER SYSTEM.

DUCT CONSTRUCTION AND LEAK TEST SCHEDULE

TAG	DUCT PRESSURE CLASS				SUPPLY				RETURN/OUTSIDE/ EXHAUST AIR		DUCT TEST PRESSURE S.P. [IN WG]	DUCT TEST TYPE
					ROUND / OVAL		RECTANGULAR					
	SUPPLY DUCT S.P. [IN WG]	RETURN DUCT S.P. [IN WG]	EXHAUST DUCT S.P. [IN WG]	OUTSIDE AIR DUCT S.P. [IN WG]	DUCT SEAL CLASS	DUCT LEAK CLASS CFM/100 S.F.	DUCT SEAL CLASS	DUCT LEAK CLASS CFM/100 S.F.	DUCT SEAL CLASS	DUCT LEAK CLASS CFM/100 S.F.		
RETURN		–2		–2					B	24	2.0	1
LOW PRESSURE SUPPLY DUCT	2				B	24	B	24			2.0	1
EXHAUST DUCT			–1						B	24	1.0	1

NOTES

1. TEST IN ACCORDANCE WITH SPECIFICATION SECTION 23 05 93, TESTING, ADJUSTING AND BALANCING FOR HVAC AND THE PROCEDURES IN SMACNA HVAC AIR DUCT LEAKAGE TEST MANUAL.

ROOF HOOD SCHEDULE

TAG	SERVICE	SIZE (IN.) WxH	THROAT AREA (SF)	C.F.M.
RH–1	EXHAUST	20 X 20	1	320

NOTES:
1. PROVIDE WITH MANUFACTURER'S ROOF CURB AND BIRDSCREEN.

Revisions:	Date

CONSULTANTS:

PaCE COLLABORATIVE
MECHANICAL ELECTRICAL ENGINEERS
VIRGINIA BEACH, VA - 757-499-7223

COMMONWEALTH OF VIRGINIA
WILLIAM G. QUINN, JR.
Lic. No. 041704
5-15-12
PROFESSIONAL ENGINEER
11220

ARCHITECT:

INNOVATE Architecture • Interiors
441 WASHINGTON STREET PORTSMOUTH, VA 23704 (P) 757.393.9900 (F) 757.393.9907

Drawing Title: MECHANICAL CONTROLS AND SCHEDULES

Approved: Project Director

Project Title: VETERAN'S ADMINISTRATION HOSPITAL - HIGH TECH CONFERENCE ROOM RENOVATION

Location: FAYETTEVILLE, NORTH CAROLINA

Date: 05 - 14 - 12 | Checked: KDS | Drawn: CGG

Project Number: 565-11-101

Building Number: 3

Drawing Number: MH700

Dwg. 28 of 36

Office of Construction and Facilities Management

Department of Veterans Affairs

VA FORM 08–6231