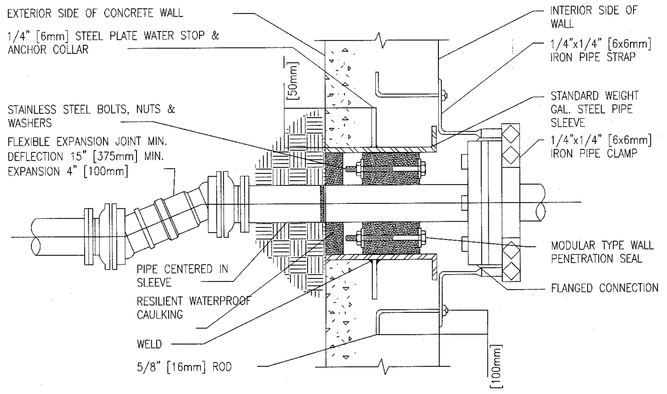

PIPE PENETRATION THROUGH WALLS BELOW GRADE

NTS

1 / 1-P6

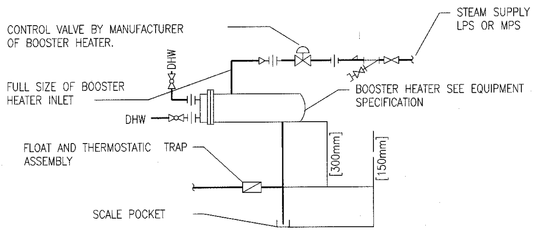

NOTES:

1. ALL STEAM BOOSTER HEATERS REQUIRED BY EQUIPMENT SPECIFICATION SHALL BE PIPED AS SHOWN ABOVE.
2. SEE EQUIPMENT SPECIFICATION AND/OR PLUMBING DRAWINGS FOR PIPING CONNECTIONS.

CONNECTIONS TO DOMESTIC WATER BOOSTER HEATERS

NTS

4 / 1-P6

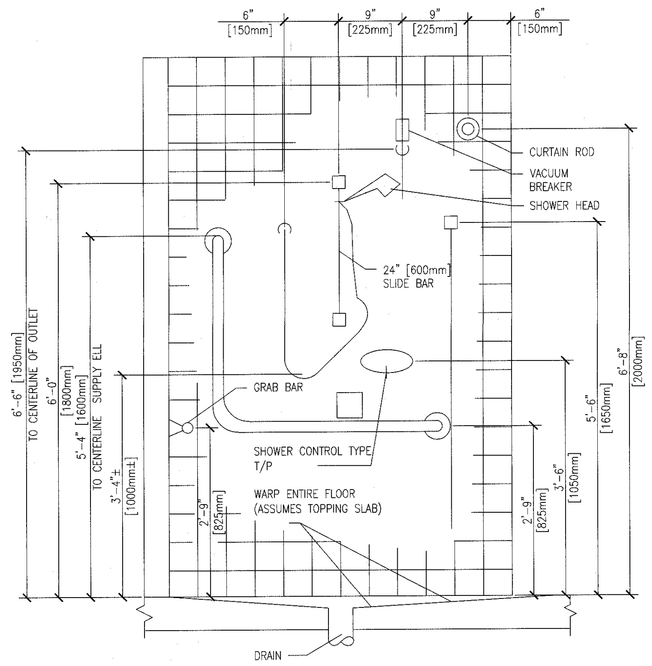

P-701 PATIENT SHOWER

NTS

7 / 1-P6

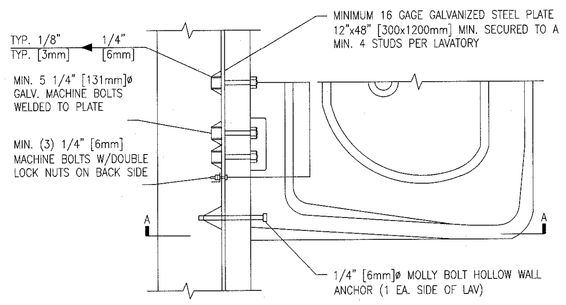

PLAN

NOTE:

1. AT LAVS WITH FOOT PEDAL CONTROLS PROVIDE AN ADDITIONAL 16 GAGE GALVANIZED STEEL PLATE 12"x16" [300x600mm] SECURED TO A MINIMUM OF 2 STUDS PER FOOT PEDAL.
2. PROVIDE 20 GAGE STUDS WHEN HEIGHT EXCEEDS 12'-0" [3600mm]

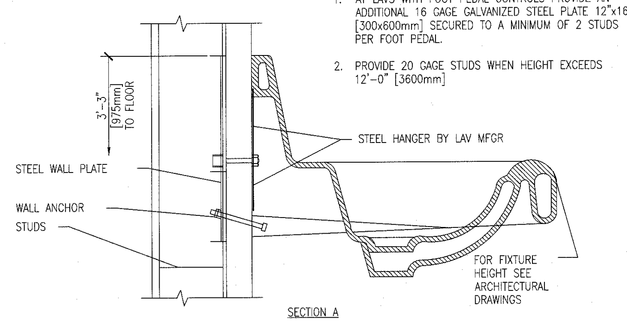

SECTION A

LAVATORY MOUNTING DETAIL

NTS

2 / 1-P6

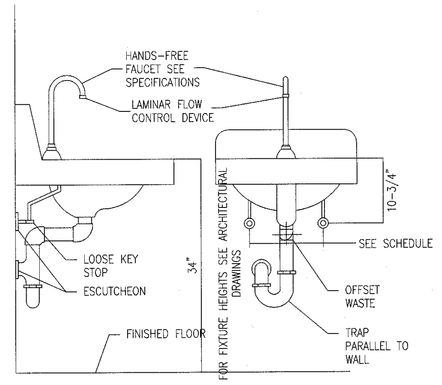

TYPICAL WHEELCHAIR LAVATORY DETAIL

NTS

5 / 1-P6

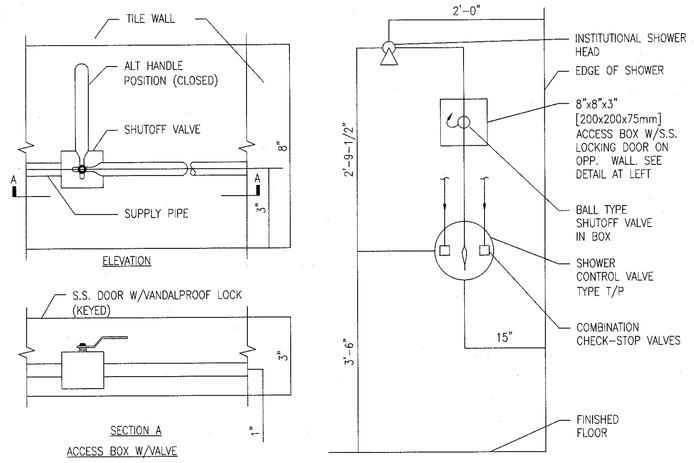

P-703 PATIENT SHOWER

NTS

8 / 1-P6

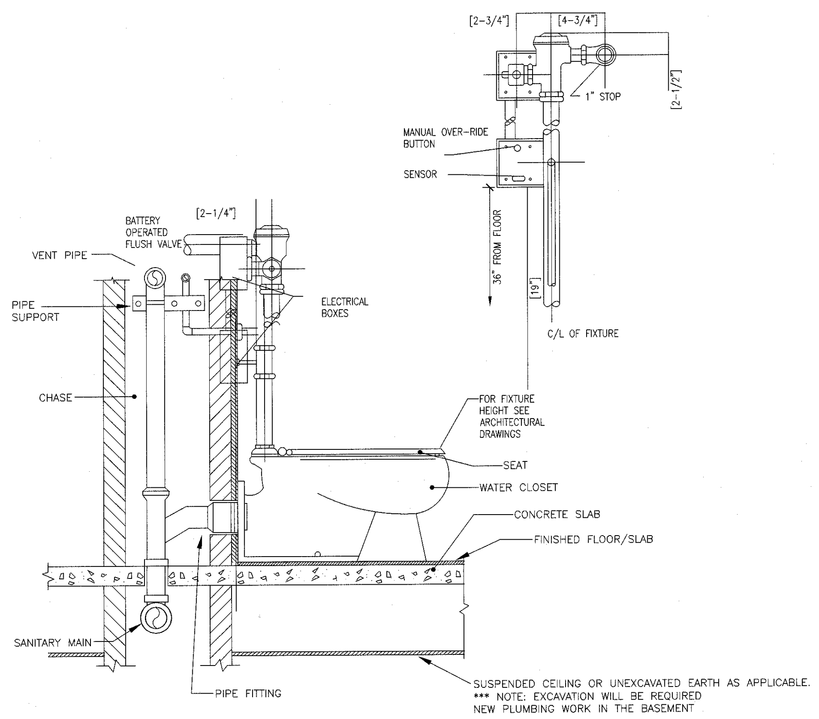

FLOOR-MOUNTED TOILET DETAIL

NTS

3 / 1-P6

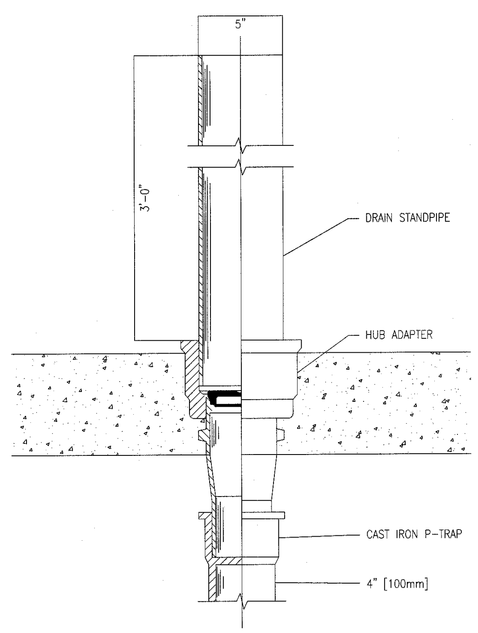

HUB DRAIN AND STANDPIPE

NTS

6 / 1-P6

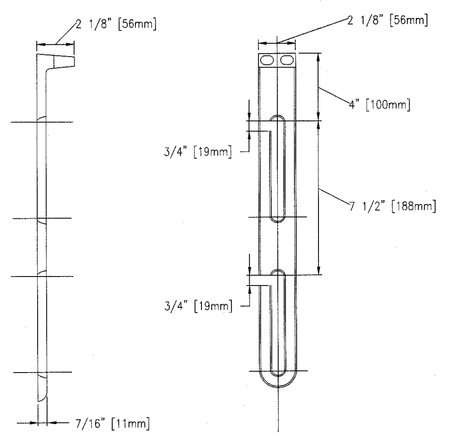

HANGER ROD SUPPORT FOOT

NTS

9 / 1-P6

FULLY SPRINKLERED BUILDING
BID DOCUMENTS

Revisions:	Date

CONSULTANTS:

STATE OF WISCONSIN — KERRY LEE PICKETT 36602-006 REGISTERED PROFESSIONAL ENGINEER — 7/9/12

ARCHITECT/ENGINEERS:

PARADIGM ENGINEERS AND CONSTRUCTORS
PO BOX 436223 Louisville, Kentucky 40253 – PH: 502.339.8511 – www.paradigmusa.com

20 JUL 2012 — STATE OF KENTUCKY — BLAINE CAMIEL VAN GAUSBEKE 24,798 LICENSED PROFESSIONAL ENGINEER

Drawing Title:	PLUMBING DETAILS
Approved: Project Director	
Project Title:	SURGICAL SUPPORT AND LOCKERS
Location:	IOWA CITY VAMC, 601 HIGHWAY 6 WEST, IOWA CITY, IOWA 52246-2208
Date:	07-13-12
Checked:	KLP
Drawn:	JEM
Project Number:	636A8-11-011
Building Number:	1
Drawing Number:	P-6

Office of Construction and Facilities Management

Department of Veterans Affairs

VA FORM 08-6231