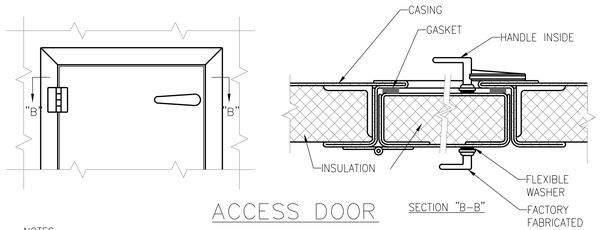

NOTES:
1. LATCHES SHALL BE OF THE WEDGE TYPE TO CLOSE DOORS TIGHTLY.
2. HINGES ON THE ACCESS DOORS SHALL HAVE NON-CORROSIVE PINS.
3. SEE SMACNA 2005, FIGURE 9-15

1 ACCESS PANEL AND DOOR DETAIL

NTS

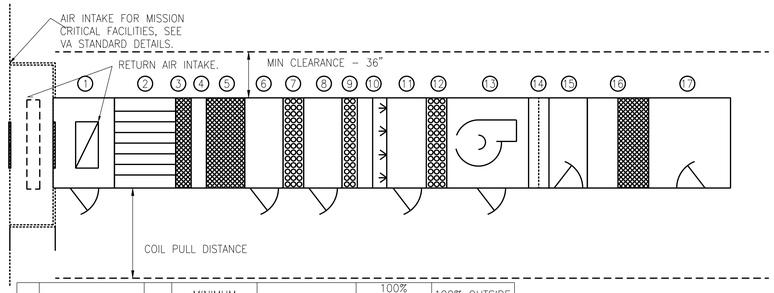

	AIR HANDLING UNIT	ITEM	MINIMUM OUTSIDE AIR TWO BEDS OF FILTERS VAV	MINIMUM OUTSIDE AIR THREE BEDS OF FILTERS CV	100% OUTSIDE AIR TWO BEDS OF FILTERS CV	100% OUTSIDE AIR THREE BEDS OF FILTERS CV
*	MIXING BOX	1	YES	YES	NO	NO
*	BLENDER SECTION	2	YES	YES	NO	NO
	PRE-FILTERS (SIDE ACCESS)	3	YES	YES	YES	YES
	INSPECTION SECTION, SMALL	4	YES	YES	YES	YES
	AFTER FILTER (SIDE ACCESS)	5	YES	YES	YES	YES
	ACCESS SECTION, MED-LARGE	6	YES	YES	YES	YES
*	HEAT RECOVERY COIL	7	NO	NO	YES	YES
*	ACCESS SECTION, MED-LARGE	8	NO	NO	YES	YES
*	PRE-HEAT COIL	9	YES	YES	YES	YES
*	INSPECTION SECTION,SMALL	10	YES	YES	YES	YES
	HUMIDIFIER	11	YES	YES	YES	YES
	COOLING COIL	12	YES	YES	YES	YES
	FAN	13	YES	YES	YES	YES
*	DIFFUSER PLATE	14	NO	NO	NO	YES
*	ACCESS SECTION,MED-LARGE	15	NO	NO	YES	YES
*	HEPA FILTER	16	NO	NO	NO	YES
*	DISCHARGE PLENUM (VERTICAL)	17	YES	YES	YES	YES
* AS REQUIRED						

NOTE:
1. ACCESS DOORS SHALL BE GASKETED AND HINGED TO OPEN AGAINST FAN OPERATING PRESSURE TO PREVENT AIR LEAKAGE.
2. MINIMUM ACCESS DOOR WIDTH SHALL BE 24" [600mm].
3. ACCESS DOOR HEIGHT SHALL BE DETERMINED BY UNIT CASING BUT NOT TO EXCEED 6'-0" [1800mm].
4. ACCESS DOORS ON FAN SUCTION SHALL OPEN OUTWARD.
5. ACCESS DOORS ON FAN DISCHARGE SIZE SHALL OPEN INWARD.

4 ACCESS DOOR SWING DETAIL FOR AIR HANDLING UNITS

NTS

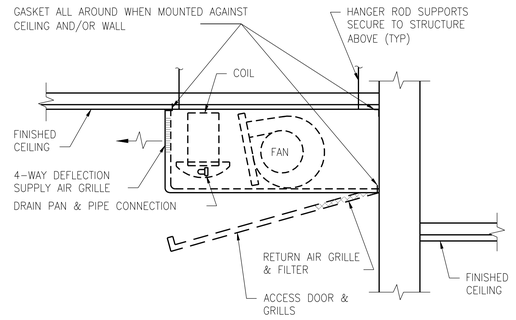

NOTE:
UNLESS OTHERWISE NOTED, ALL UNITS SHALL BE MOUNTED AGAINST FINISHED CEILING.

2 FAN COIL UNIT - HORIZONTAL EXPOSED

NTS

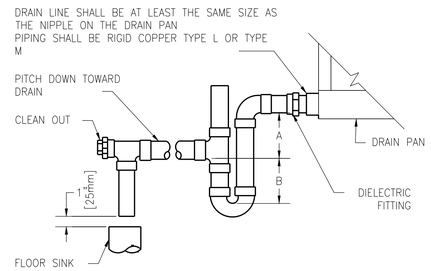

NOTE:

1. DIELECTRIC FITTING TO BE USED WHEN TWO DISSIMILAR METALS ARE TO BE CONNECTED.

UNIT TYPE	A	B
DRAW THRU	2" [50mm] PLUS X	X

WHERE X = STATIC PRESSURE IN PAN

5 AIR HANDLING UNIT DRAIN TRAP DETAIL

NTS

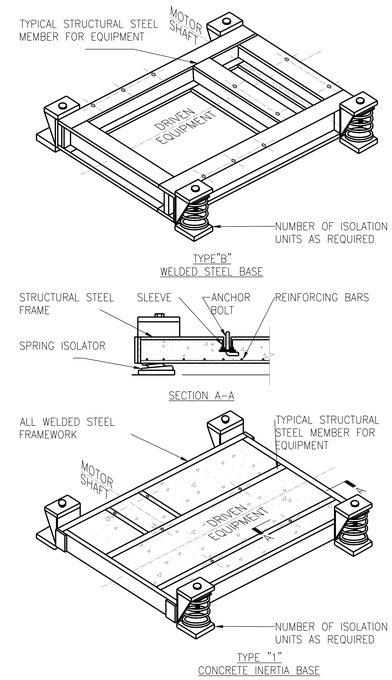

3 VIBRATION ISOLATION BASES

NTS

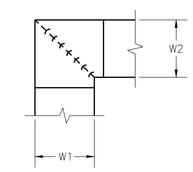

NOTE:

1. ALL VANE ELBOWS SHALL BE CONSTRUCTED AND INSTALLED AS DETAILED BY SMACNA.
2. WHEN W1 DOES NOT EQUAL W2, VANE SHALL BE SINGLE THICKNESS VANE TYPE REGARDLESS OF W DIMENSION.
3. ALL SINGLE THICKNESS VANES SHALL HAVE A 2" [50mm] RADIUS, 1 1/2" [40mm] MAXIMUM SPACE BETWEEN VANES AND A 3/4" [20mm] TRAILING EDGE.
4. WHEN W EQUALS W2 AND W1 IS GREATER THAN 20" [500mm] VANES SHALL BE DOUBLE VANE TYPE.

6 DUCTWORK SQUARE VANE ELBOWS

NTS

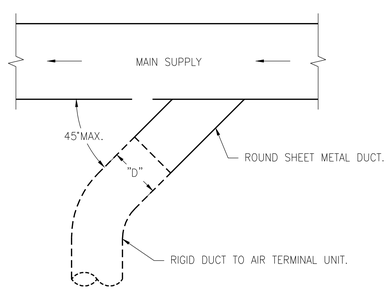

7 SUPPLY DUCT TAKEOFF - AIR TERMINAL UNIT

NTS

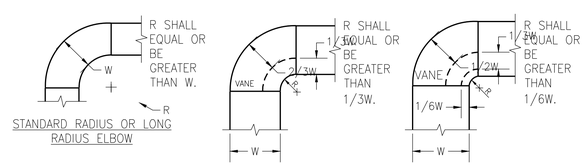

NOTE:

1. THE INTERIOR SURFACE OF ALL RADIUS ELBOWS SHALL BE MADE ROUND.
2. ALL STANDARD RADIUS ELBOWS CAN BE SUBSTITUTED WITH SHORT RADIUS ELBOWS. ALL SHORT RADIUS ELBOWS SHALL HAVE VANES. VANES SHALL BE CONSTRUCTED, SUPPORTED AND FASTENED AS RECOMMENDED BY SMACNA.

8 DUCTWORK RADIUS ELBOWS

NTS

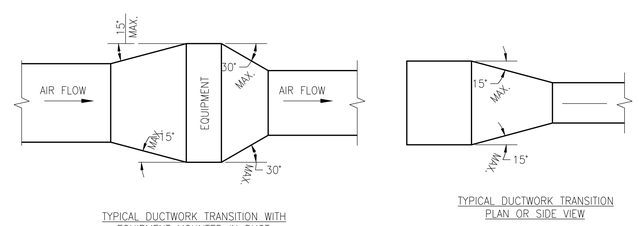

NOTE:
UNLESS OTHERWISE INDICATED ON PLANS, MAXIMUM ANGLES SHOWN SHALL APPLY.

9 DUCTWORK TRANSITIONS (WITH EQUIPMENT MOUNTED IN DUCT)

NTS

VETERANS HEALTH CARE SYSTEM OF THE OZARKS

Engineering Service

Mark	Description	Date	Appr.

Designed by:
Dwn by:
Ckd by:
Reviewed by:
Submitted by:
Date:
Rev.
Design file no.
Drawing code:
File name:
Plot date:
Plot scale:

PROJECT TO REPLACE AIR HANDLING UNIT IN BUILDING 4

VETERANS ADMINISTRATION BUILDING
BUILDING #4 HVAC RENOVATION
FAYETTEVILLE, AR

HVAC - DETAILS

Sheet reference number:
M-3