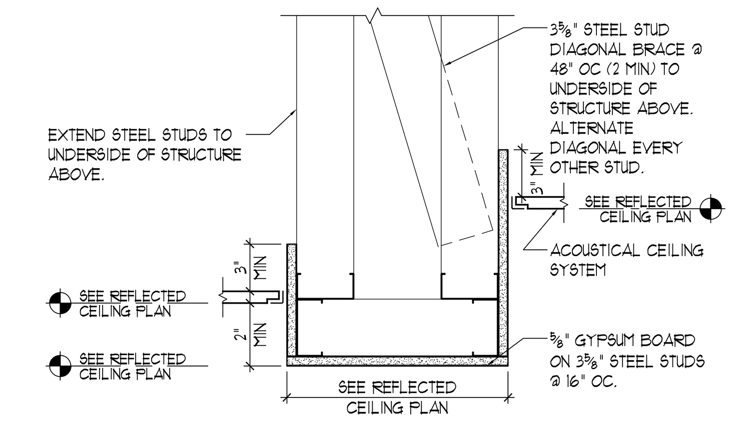

A3 / AS900 **WIDE BULKHEAD** 1½"=1'-0" N210WB

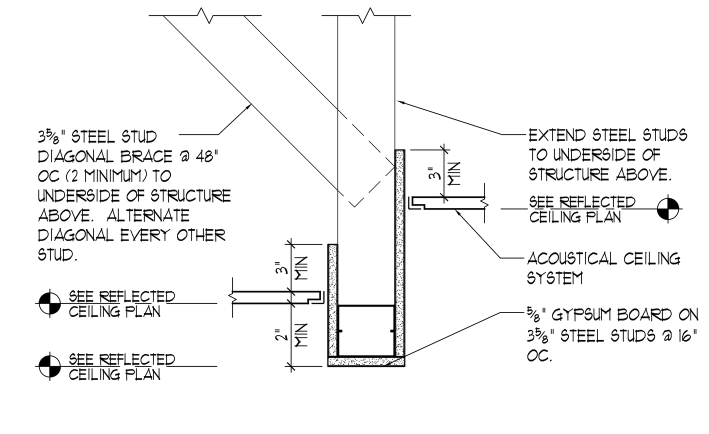

A5 / AS900 **NARROW BULKHEAD** @ VARYING HEIGHT CEILINGS 1½"=1'-0" M210NB02

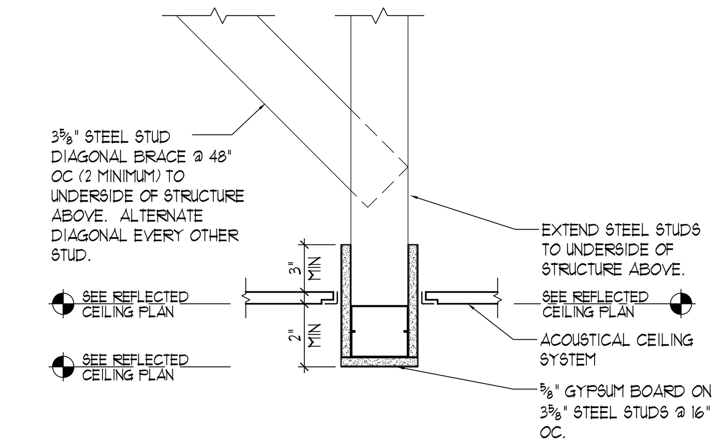

A6 / AS900 **NARROW BULKHEAD** @ SAME HEIGHT CEILINGS 1½"=1'-0" M210NB01

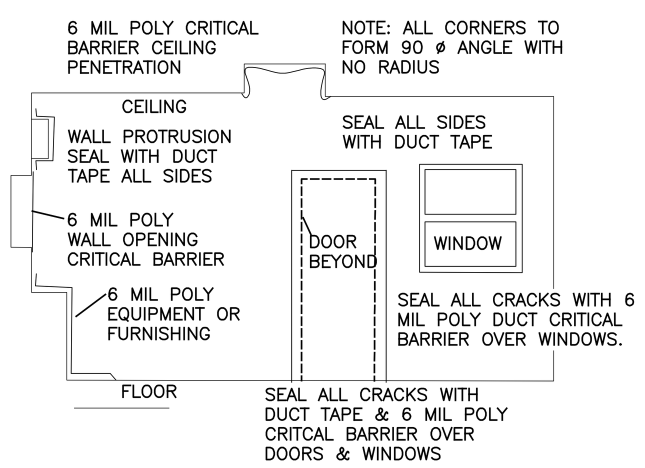

B1 / AS900 CRITICAL BARRIER PREP INSTALL NOT TO SCALE DUSTDIA

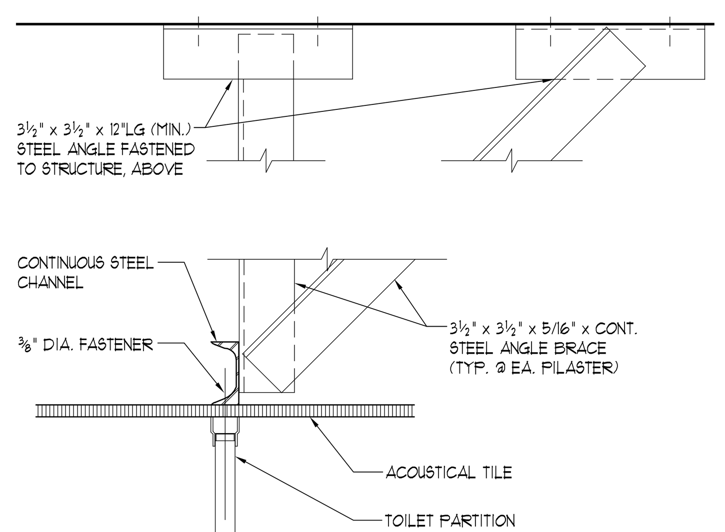

B2 / AS900 **TOILET PARTITION BRACKET** CEILING MOUNT 1½" = 1'-0" P1502000

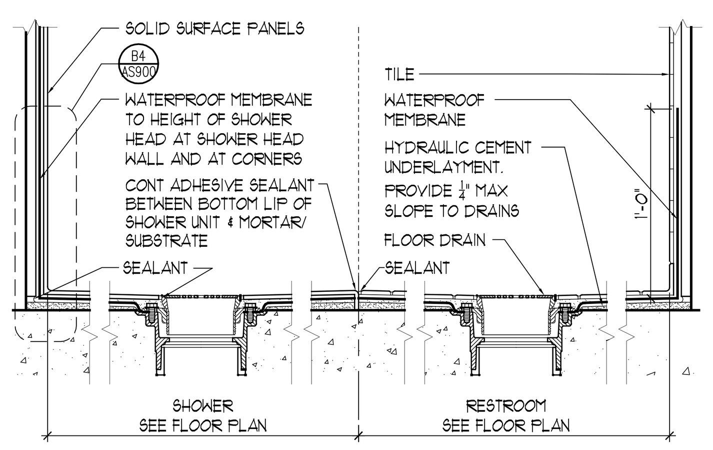

B3 / AS900 **SHOWER BASE W/PREFAB SHOWER** 1½" = 1'-0" M340SB3

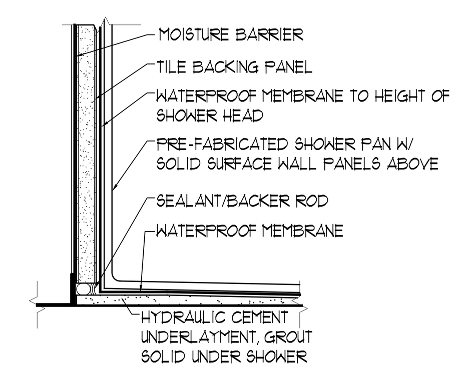

B4 / AS900 **SHOWER BASE @ SHOWER HEAD WALL** @ PRE-FABRICATED BASE 3"=1'-0" M540SB3

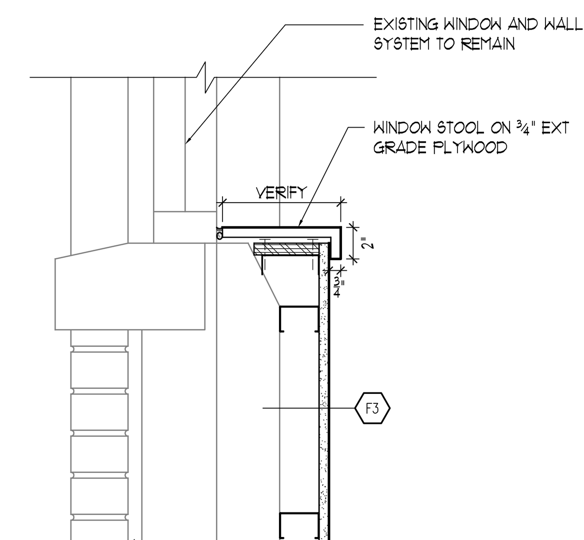

B5 / AS900 **WINDOW STOOL DETAIL** 1½"=1'-0" J2259ILL01

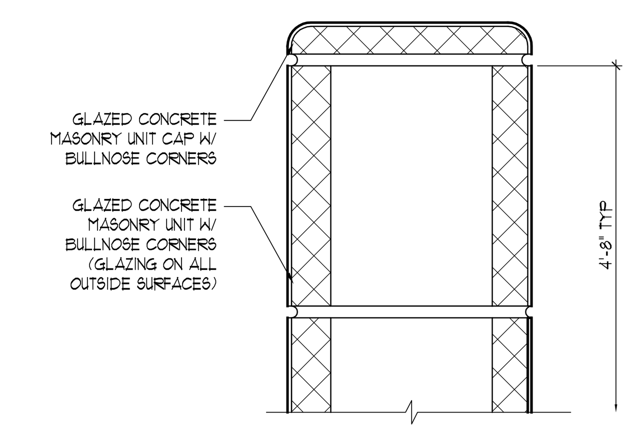

B6 / AS900 **PARTIAL HEIGHT WALL DETAIL** KITCHEN 3"=1'-0" GL CMU CAP

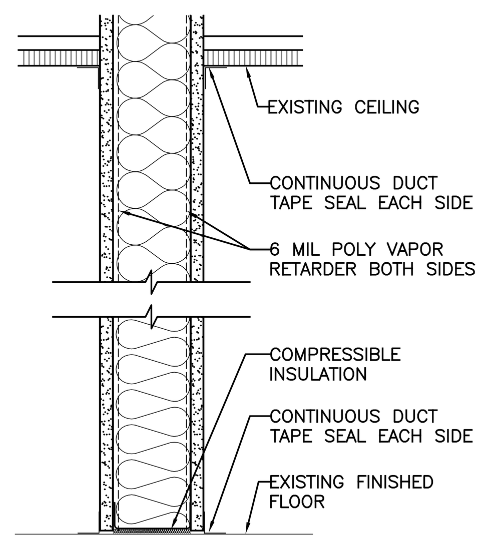

C1 / AS900 CBW–2 CONSTRUCTION BARRIER WALL 1 HOUR FIRE RATED UL#465 1/2" = 1'–0" CBW2

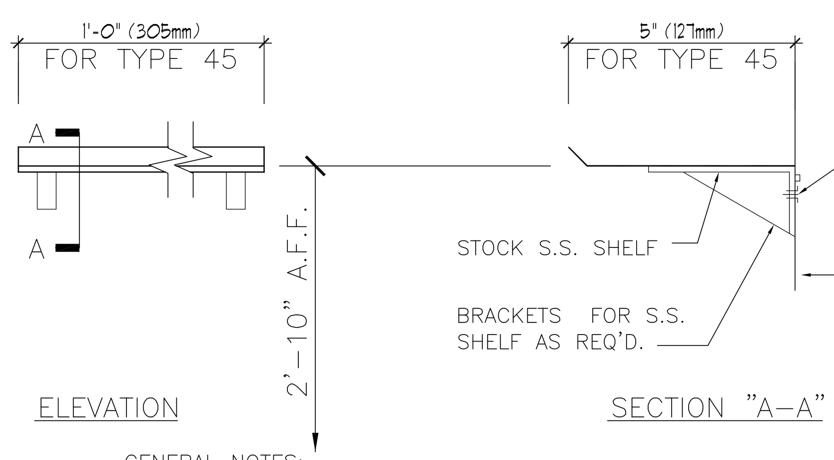

GENERAL NOTES:

1. SEE ARCH. PLANS FOR LOCATION OF STAINLESS STEEL SHELVES TYPES 45.
2. SEE ARCH. PLANS FOR EXTENT OF SHELVING AND ACTUAL SPACING OF BRACKETS.

C2 / AS900 **STAINLESS STEEL SHELF DETAIL** SHELF TYPE 45 1½" = 1'-0" SS-SHELF

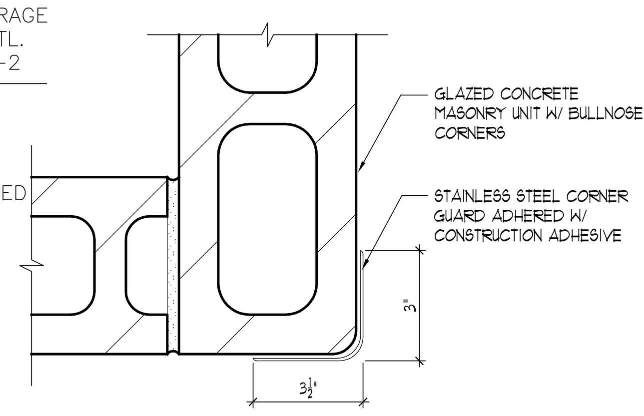

C3 / AS900 **3" STAINLESS STEEL CORNER GUARD** TYPICAL MASONRY CONSTRUCTION 3"=1'-0" P3502003

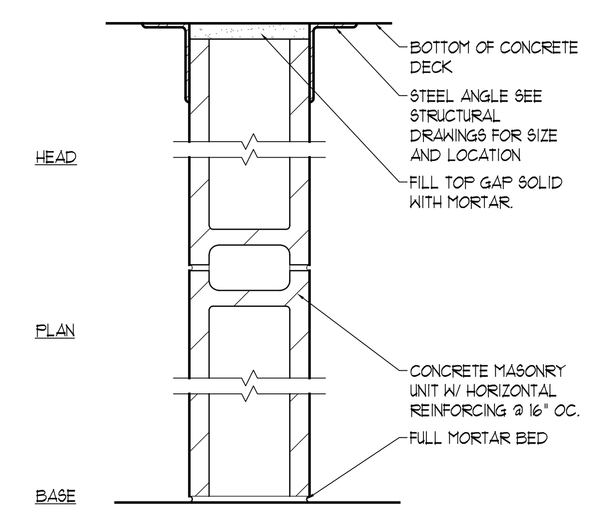

C4 / AS900 **INTERIOR MASONRY PARTITION** SEE PLAN FOR DEPTH & FIRE RATING 1½"=1'-0" F301MB

F-INTERIOR WALLS - PARTITIONS: F301MB
INTERIOR MASONRY PARTITION
CONCRETE DECK

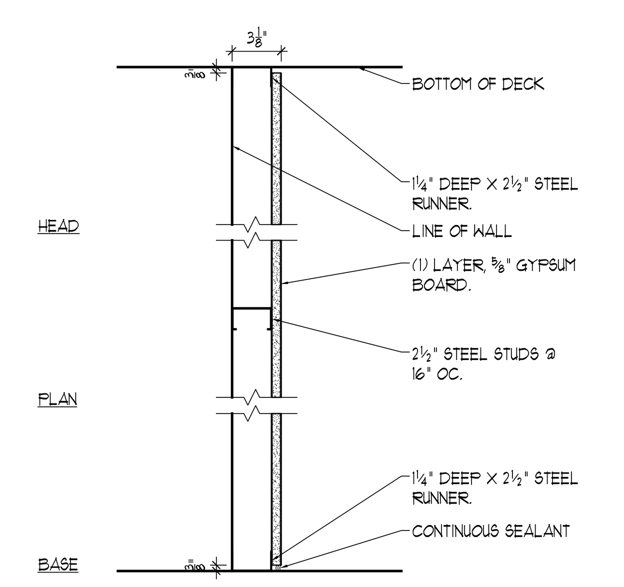

C5 / AS900 **FURRING TYPE - F3** 3" NOM 1½"=1'-0" F501F3

F-INTERIOR WALLS - PARTITIONS: F501F3
FURRING TYPE - F3
STEEL STUD

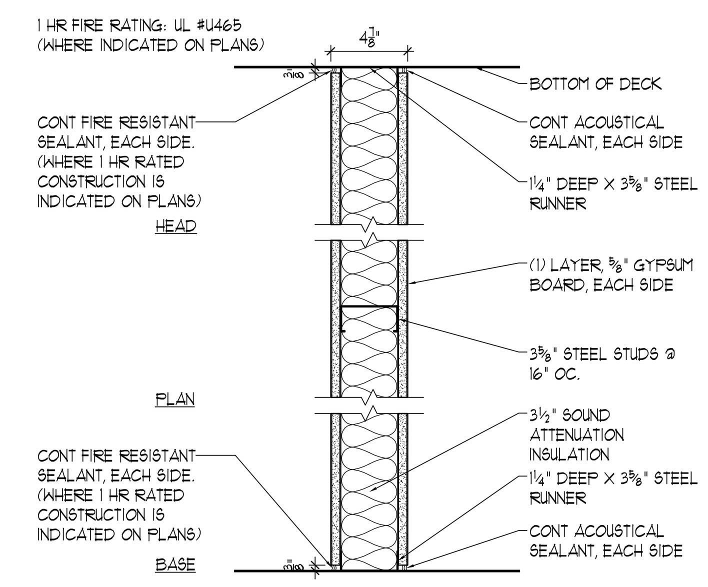

C6 / AS900 **PARTITION TYPE - A4** 5" NOM 1½"=1'-0" F511A4

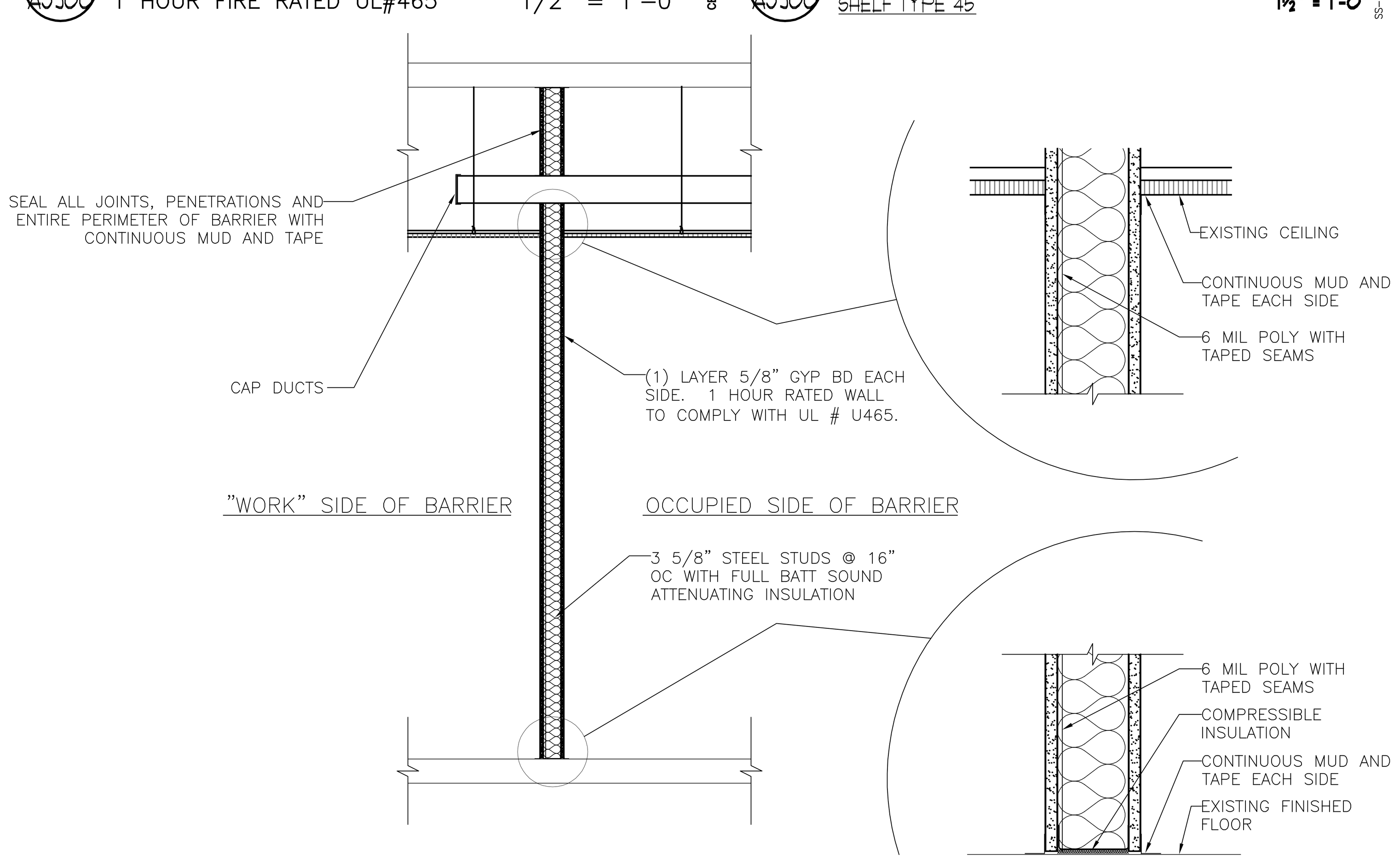

D1 / AS900 1 HOUR CONSTRUCTION (UL # U465) & INFECTION CONTROL BARRIER 1/2" = 1'–0" F5192001

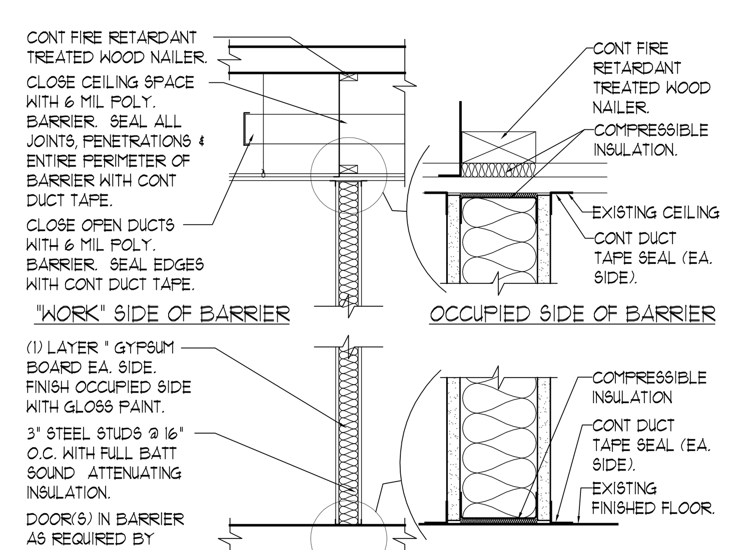

D3 / AS900 **TYPICAL DUST-PROOF BARRIER** ½"=1'-0" F510DPB

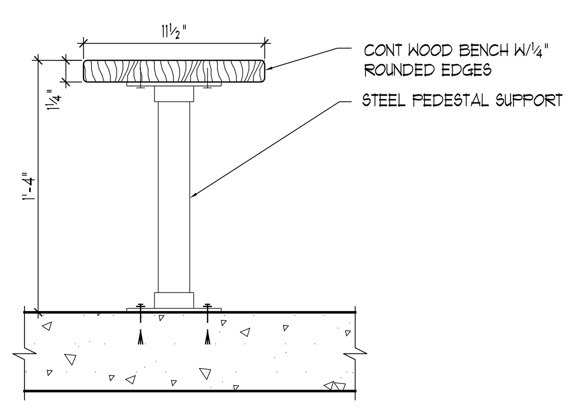

D4 / AS900 **WOOD BENCH** 1½" = 1'-0" P600BNCH

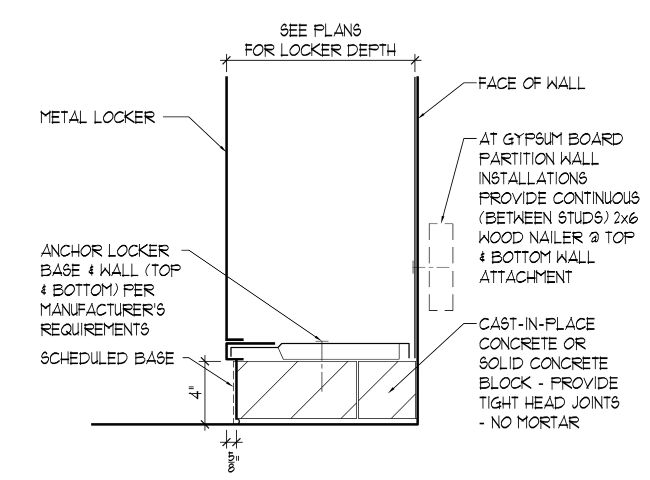

D5 / AS900 **MASONRY LOCKER BASE** 1½"=1'-0" F600MLB

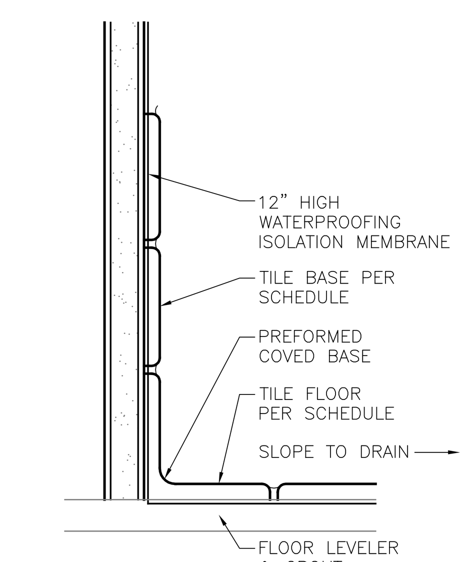

D6 / AS900 BASE DETAIL AT TOILET ROOM HALF SIZE BASE2

FINAL BID DOCUMENTS

Revisions:	Date
FINAL BID DOCUMENTS	12-14-12
95% CONSTRUCTION DOCUMENT SUBMISSION	11-26-12
50% REVISED DOCUMENTS FOR REVIEW	11-19-12
90% CONSTRUCTION DOCUMENTS SUBMISSION	05-17-12
50% CONSTRUCTION DOCUMENTS SUBMISSION	04-06-12
35% DOCUMENTS SUBMISSION	02-22-12
SCHEMATIC DESIGN SUBMISSION	11-21-11

Federal Health Care Center
U.S. Department of Veterans Affairs | U.S. Department of Defense

Captain James A. Lovell
Federal Health Care Center
3001 Green Bay Road
North Chicago, IL, 60064

CONSULTANTS:
ARNOLD & O'SHERIDAN Consulting Engineers
CHEQUAMEGON BAY ENGINEERING, INC.
MACKESEY AND ASSOCIATES, LLC

PROJECT LEADER:
Plunkett Raysich Architects, LLP
11000 West Park Place • Milwaukee WI 53224 • Tel 414 359-3060 • Fax 414 359-3070
Intelligent Designs Inspired Results
www.prarch.com
PRA Job No. 110172-01

Drawing Title: Interior Details
Approved: Project Director
Project Title: AE SCIP for Building 6 FHCC
Location: North Chicago, IL
Date: December 14, 2012
Checked By: PRA
Drawn By: RLS
Project Number: 556-11-119
Building Number: 6
Drawing Number: AS-900

Office of Facilities Management
Department of Veterans Affairs

VA FORM 08–6231, OCT 1978