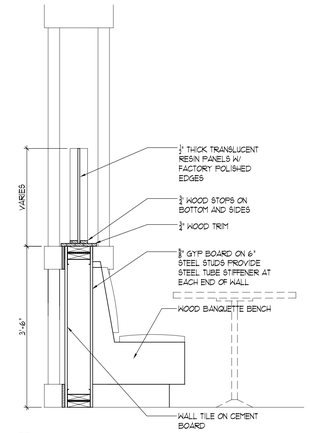

C1 A5901 HALF WALL AT BENCH SEATING
¾" = 1'-0" HALFWALL

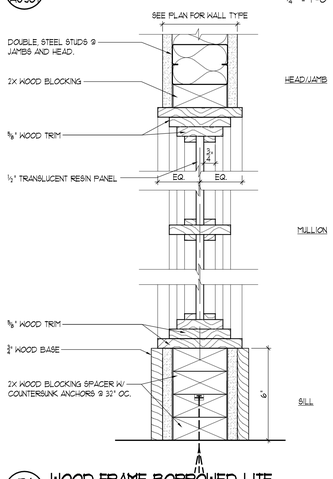

D1 A5901 WOOD FRAME BORROWED LITE
3" = 1'-0" WOFRAMELITE

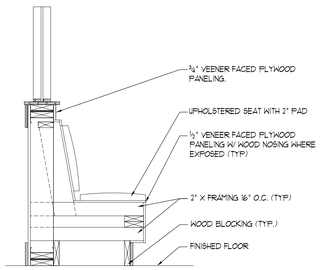

B2 A5901 BENCH/BOOTH
3/4"=1'-0" BENCH

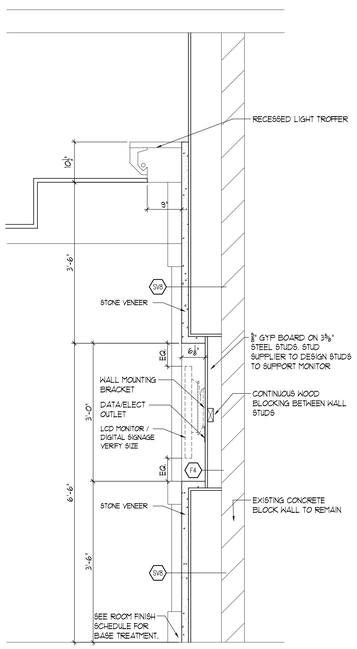

D2 A5901 MONITOR / DIGITAL SIGNAGE RECESS
¾" = 1'-0" MONITOR

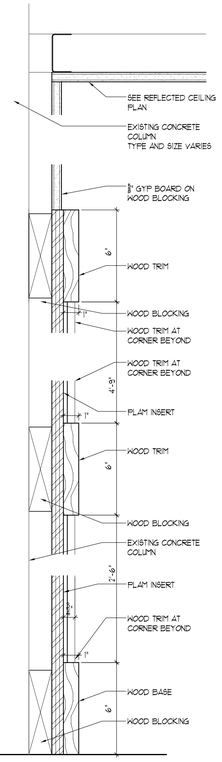

D3 A5901 COLUMN ENCLOSURE - TYPICAL
3" = 1'-0" COLUMNT

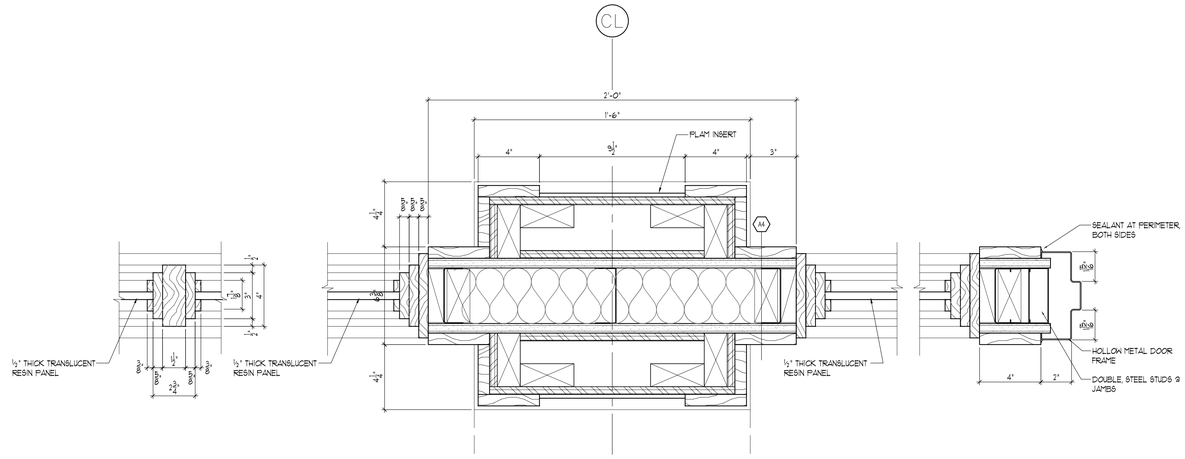

B4 A5901 VERTICAL MULLION
3" = 1'-0" COLUMNT

B5 A5901 COLUMN ENCLOSURE - AT CORRIDOR WALL
NORTH WALL
3" = 1'-0" COLUMNT

B6 A5901 DOOR JAMB
HINGE SIDE
3" = 1'-0" COLUMNT

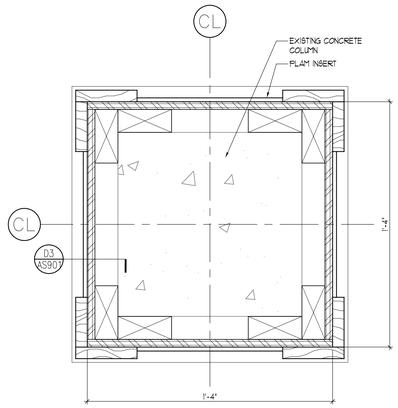

D4 A5901 COLUMN ENCLOSURE - TYPICAL
3" = 1'-0" COLUMNT

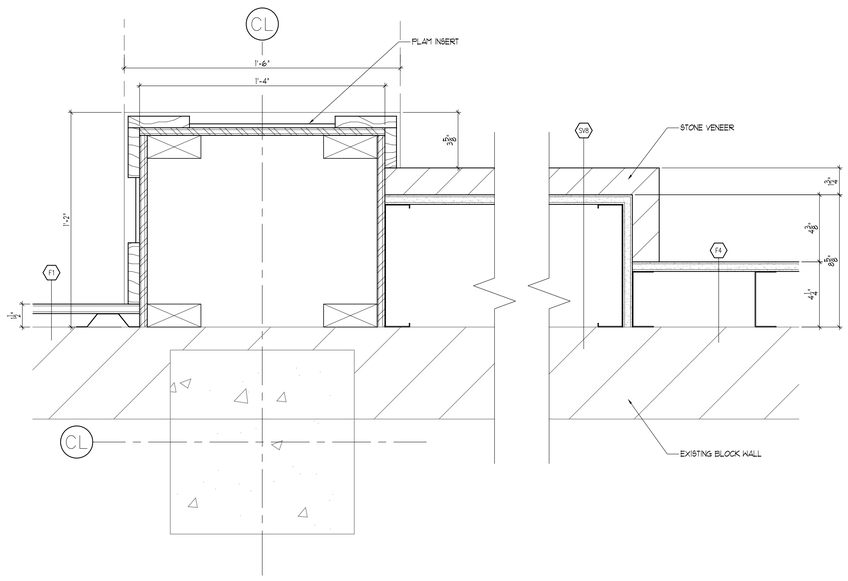

D5 A5901 COLUMN ENCLOSURE - AT CORRIDOR WALL
SOUTH WALL
3" = 1'-0" COLUMNT

FINAL BID DOCUMENTS

FINAL BID DOCUMENTS	12-14-12
95% CONSTRUCTION DOCUMENT SUBMISSION	11-26-12
50% REVISED DOCUMENTS FOR REVIEW	11-19-12
90% CONSTRUCTION DOCUMENTS SUBMISSION	05-17-12
50% CONSTRUCTION DOCUMENTS SUBMISSION	04-06-12
35% DOCUMENTS SUBMISSION	02-22-12
SCHEMATIC DESIGN SUBMISSION	11-21-11
Revisions:	Date

Federal Health Care Center
U.S. Department of Veterans Affairs | U.S. Department of Defense

Captain James A. Lovell
Federal Health Care Center
3001 Green Bay Road
North Chicago, IL, 60064

CONSULTANTS:
ARNOLD & O'SHERIDAN Consulting Engineers
CHEQUAMEGON BAY ENGINEERING, INC.
MACKESEY AND ASSOCIATES, LLC

PROJECT LEADER:
Plunkett Raysich Architects LLP
11000 West Park Place ▲ Milwaukee WI 53224 ▲ Tel 414 359-3060 ▲ Fax 414 359-3070
Intelligent Designs Inspired Results
www.prarch.com
PRA Job No. 110172-01

Drawing Title	Project Title	Project Number
Interior Details	AE SCIP for Building 6 FHCC	556-11-119
Approved: Project Director	Location: North Chicago, IL	Building Number: 6
	Date: December 14, 2012 / Checked By: PRA / Drawn By: RLS	Drawing Number: AS-901

Office of Facilities Management
Department of Veterans Affairs

VA FORM 08-6231, OCT 1978