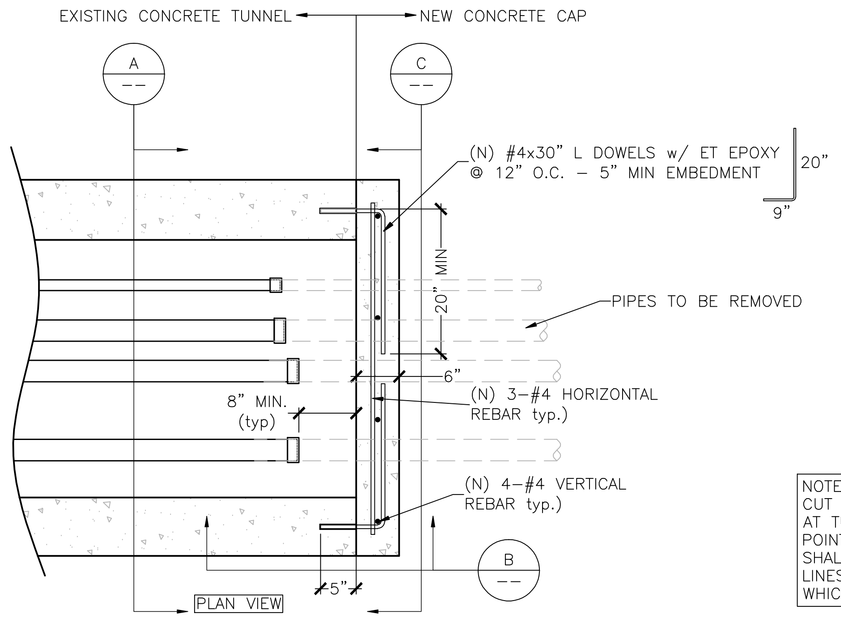

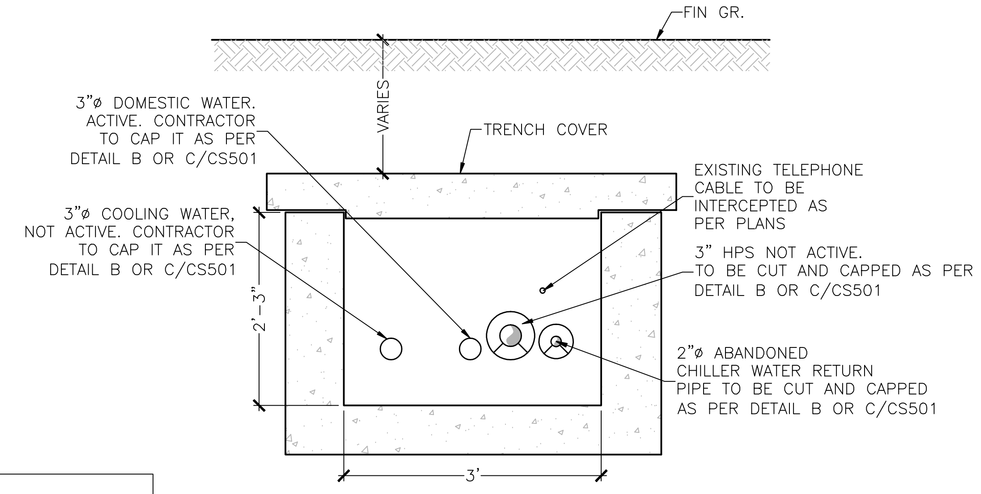

NOTE:
CUT AND CAP ALL LINES AT TUNNEL INTERCEPTION POINT. CONTRACTOR SHALL VERIFY WHICH LINES ARE ACTIVE AND WHICH ARE ABANDONED

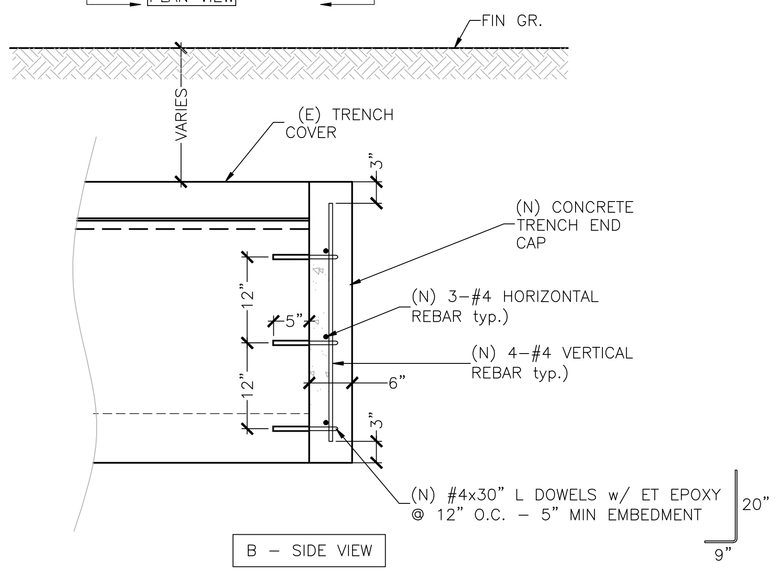

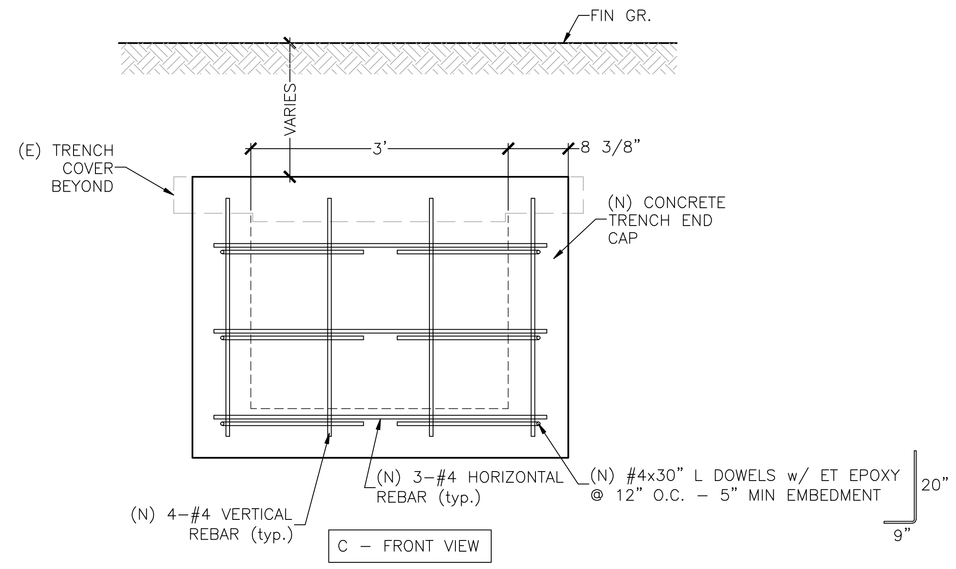

(A) NEW TUNNEL CONCRETE CAP DETAIL — SCALE: 1" = 1'–0"

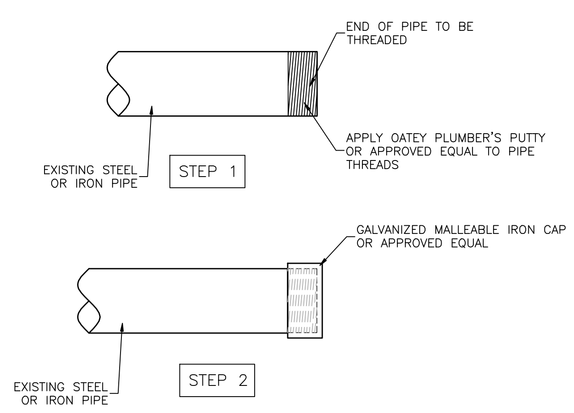

(B) STEEL OR CAST IRON PIPES END CAP DETAIL — SCALE: 3" = 1'–0"

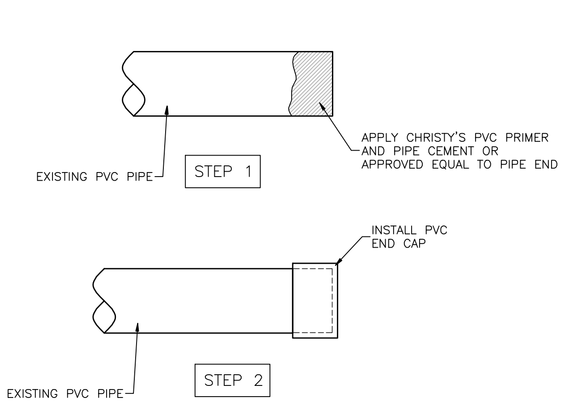

(C) PVC PIPES END CAP DETAIL — SCALE: 3" = 1'–0"

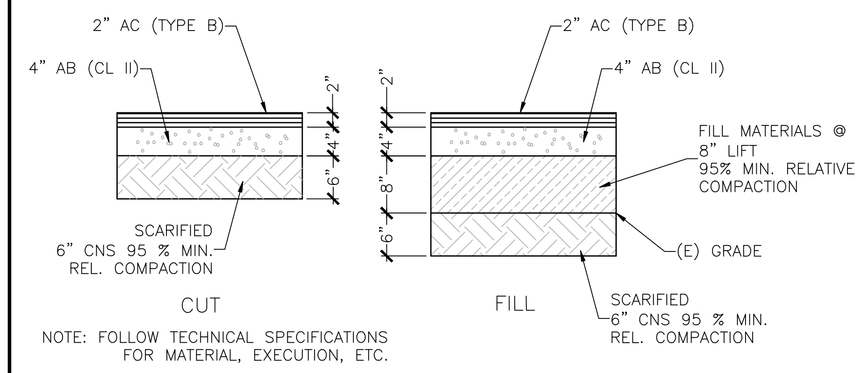

NOTE: FOLLOW TECHNICAL SPECIFICATIONS FOR MATERIAL, EXECUTION, ETC.

(F) TYPICAL PAVEMENT DETAILS — SCALE: 1" = 1'–0"

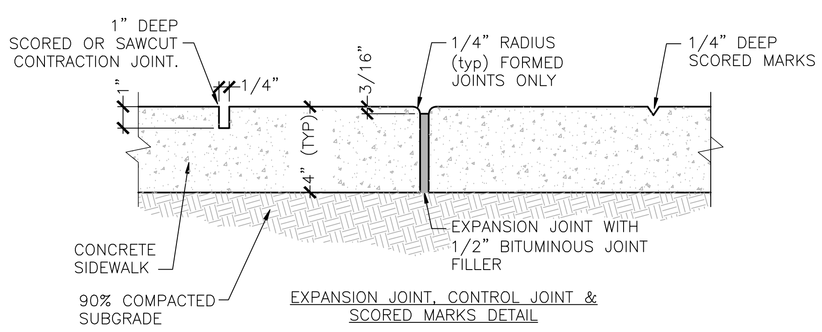

EXPANSION JOINT, CONTROL JOINT & SCORED MARKS DETAIL

NOTES:

1. EXPANSION JOINTS SHALL BE LOCATED WHERE SIDEWALK ABUTS CONCRETE DRIVEWAYS, CURB OR OTHER ADJACENT STRUCTURES. EXPANSION JOINTS SPACING NOT TO EXCEED 60'.
2. ONE–HALF INCH BITUMINOUS JOINT FILLER SHALL BE INSTALLED AT EXPANSION JOINT LOCATIONS AND SHALL EXTEND THE FULL DEPTH OF THE SIDEWALK.
3. 1" DEEP CONTRACTION JOINTS SHALL BE PLACED AT 15' [4572mm] MAX INTERVALS OR AT A SPACING THAT MATCHES THE ADJACENT CURB WHEN POSSIBLE.
4. FORMED CONTRACTION JOINTS SHALL BE FINISHED WITH A TOOL HAVING A 1/4" [6mm] RADIUS AT EXPANSION JOINTS.
5. CONCRETE SHALL BE FINISHED BY MEANS OF A FLOAT, STEEL TROWELLED AND BROOMED WITH A FINE BRUSH IN A TRANSVERSE DIRECTION.
6. 1/4" DEEP SCORED MARKS (TYP) SPACED AT 6' [1829mm] MAX. OR EQUAL TO SIDEWALK WIDTH, WHICHEVER IS SMALLER. LENGTH–TO–WIDTH RATIO OF SIDEWALK PANELS NOT TO EXCEED 1.5:1. LONGITUDINAL SCORED MARKS SHALL BE USED WHEN SIDEWALK WIDTH EXCEEDS 6 FT.
7. FOLLOW TECHNICAL SPECIFICATIONS FOR MATERIALS, EXECUTION, ETC.

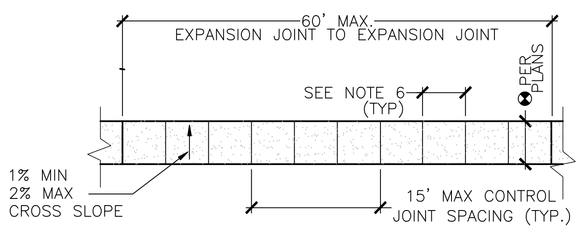

PLAN VIEW

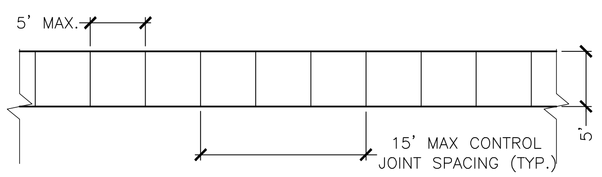

TYPICAL SCORED MARKS PATTERN

(D) CONCRETE WALKWAY — SCALE: N.T.S.

NOTE:

1) – CONTRACTOR TO PREPARE SURFACE TO PRIME FENCE AND RAILING W/ DANN EDWARDS ULTRAGRIP SELECT PRIMER (OR EQUAL) AND PAINT FENCE AND RAILING W/ DANN EDWARDS SPARTASHIELD EXTERIOR 100% ACRYLIC (OR EQUAL). COLOR: CHOCOLATE CHUNK.

A. SAFETY: OBSERVE REQUIRED SAFETY REGULATIONS AND MANUFACTURER'S WARNING AND INSTRUCTIONS FOR STORAGE, HANDLING AND APPLICATION OF PAINTING MATERIALS.
   1. TAKE NECESSARY PRECAUTIONS TO PROTECT PERSONNEL AND PROPERTY FROM HAZARDS DUE TO FALLS, INJURIES, TOXIC FUMES, FIRE, EXPLOSION, OR OTHER HARM.
   2. DEPOSIT SOILED CLEANING RAGS AND WASTE MATERIALS IN METAL CONTAINERS APPROVED FOR THAT PURPOSE. DISPOSE OF SUCH ITEMS OFF THE SITE AT END OF EACH DAYS WORK.

B. ATMOSPHERIC AND SURFACE CONDITIONS:
   1. DO NOT APPLY COATING WHEN AIR OR SUBSTRATE CONDITIONS ARE:
      a. LESS THAN 3 DEGREES C (5 DEGREES F) ABOVE DEW POINT.
      b. BELOW 10 DEGREES C (50 DEGREES F) OR OVER 35 DEGREES C (95 DEGREES F), UNLESS SPECIFICALLY PRE–APPROVED BY THE CONTRACTING OFFICER AND THE PRODUCT MANUFACTURER. UNDER NO CIRCUMSTANCES SHALL APPLICATION CONDITIONS EXCEED MANUFACTURER RECOMMENDATIONS.
   2. MAINTAIN INTERIOR TEMPERATURES UNTIL PAINT DRIES HARD.
   3. DO NO EXTERIOR PAINTING WHEN IT IS WINDY AND DUSTY.
   4. DO NOT PAINT IN DIRECT SUNLIGHT OR ON SURFACES THAT THE SUN WILL SOON WARM.
   5. APPLY ONLY ON CLEAN, DRY AND FROST FREE SURFACES EXCEPT AS FOLLOWS:
      a. APPLY WATER THINNED ACRYLIC AND CEMENTITIOUS PAINTS TO DAMP (NOT WET) SURFACES WHERE ALLOWED BY MANUFACTURER'S PRINTED INSTRUCTIONS.
      b. DAMPENED WITH A FINE MIST OF WATER ON HOT DRY DAYS CONCRETE AND MASONRY SURFACES TO WHICH WATER THINNED ACRYLIC AND CEMENTITIOUS PAINTS ARE APPLIED TO PREVENT EXCESSIVE SUCTION AND TO COOL SURFACE.

C. WOOD:
   1. SAND TO A SMOOTH EVEN SURFACE AND THEN DUST OFF.
   2. SAND SURFACES SHOWING RAISED GRAIN SMOOTH BETWEEN EACH COAT.
   3. WIPE SURFACE WITH A TACK RAG PRIOR TO APPLYING FINISH.
   4. SURFACE PAINTED WITH AN OPAQUE FINISH:
      a. COAT KNOTS, SAP AND PITCH STREAKS WITH MPI 36 (KNOT SEALER) BEFORE APPLYING PAINT.
      b. APPLY TWO COATS OF MPI 36 (KNOT SEALER) OVER LARGE KNOTS.
   5. AFTER APPLICATION OF PRIME OR FIRST COAT OF STAIN, FILL CRACKS, NAIL AND SCREW HOLES, DEPRESSIONS AND SIMILAR DEFECTS WITH WOOD FILLER PASTE. SAND THE SURFACE TO MAKE SMOOTH AND FINISH FLUSH WITH ADJACENT SURFACE.
   6. BEFORE APPLYING FINISH COAT, REAPPLY WOOD FILLER PASTE IF REQUIRED, AND SAND SURFACE TO REMOVE SURFACE BLEMISHES. FINISH FLUSH WITH ADJACENT SURFACES.
   7. FILL OPEN GRAINED WOOD SUCH AS OAK, WALNUT, ASH AND MAHOGANY WITH MPI 91 (WOOD FILLER PASTE), COLORED TO MATCH WOOD COLOR.
      a. THIN FILLER IN ACCORDANCE WITH MANUFACTURER'S INSTRUCTIONS FOR APPLICATION.
      b. REMOVE EXCESS FILLER, WIPE AS CLEAN AS POSSIBLE, DRY, AND SAND AS SPECIFIED.

D. FERROUS METALS:
   1. REMOVE OIL, GREASE, SOIL, DRAWING AND CUTTING COMPOUNDS, FLUX AND OTHER DETRIMENTAL FOREIGN MATTER IN ACCORDANCE WITH SSPC–SP 1 (SOLVENT CLEANING).
   2. REMOVE LOOSE MILL SCALE, RUST, AND PAINT, BY HAND OR POWER TOOL CLEANING, AS DEFINED IN SSPC–SP 2 (HAND TOOL CLEANING) AND SSPC–SP 3 (POWER TOOL CLEANING). EXCEPTION: WHERE HIGH TEMPERATURE ALUMINUM PAINT IS USED, PREPARE SURFACE IN ACCORDANCE WITH PAINT MANUFACTURER'S INSTRUCTIONS.
   3. FILL DENTS, HOLES AND SIMILAR VOIDS AND DEPRESSIONS IN FLAT EXPOSED SURFACES OF HOLLOW STEEL DOORS AND FRAMES, ACCESS PANELS, ROLL–UP STEEL DOORS AND SIMILAR ITEMS SPECIFIED TO HAVE SEMI–GLOSS OR GLOSS FINISH WITH TT–F–322D (FILLER, TWO–COMPONENT TYPE, FOR DENTS, SMALL HOLES AND BLOW–HOLES). FINISH FLUSH WITH ADJACENT SURFACES.
      a. THIS INCLUDES FLAT HEAD COUNTERSUNK SCREWS USED FOR PERMANENT ANCHORS.
      b. DO NOT FILL SCREWS OF ITEM INTENDED FOR REMOVAL SUCH AS GLAZING BEADS.
   4. SPOT PRIME ABRADED AND DAMAGED AREAS IN SHOP PRIME COAT WHICH EXPOSE BARE METAL WITH SAME TYPE OF PAINT USED FOR PRIME COAT. FEATHER EDGE OF SPOT PRIME TO PRODUCE SMOOTH FINISH COAT.
   5. SPOT PRIME ABRADED AND DAMAGED AREAS WHICH EXPOSE BARE METAL OF FACTORY FINISHED ITEMS WITH PAINT AS RECOMMENDED BY MANUFACTURER OF ITEM.

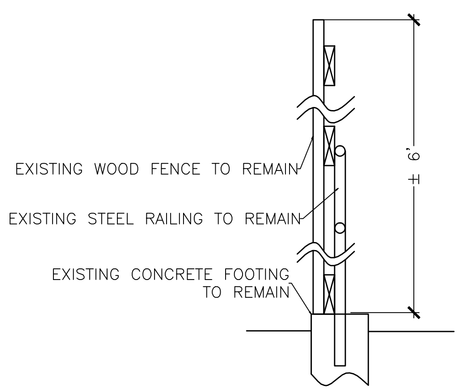

100% SUBMITTAL - FOR CONSTRUCTION

(E) FENCE AND RAILING PAINT DETAILS AND NOTES — SCALE: N.T.S.

Revisions:	Date

CONSULTANTS:

REGISTERED PROFESSIONAL ENGINEER — ESTEBAN T. PAULI — No.C51781 — Exp. 6–30–14 — CIVIL — STATE OF CALIFORNIA

ARCHITECT/ENGINEER:
PAULI ENGINEERING, INC.
944 N. VAN NESS AVE., FRESNO, CA 93728
PH: (559)237-4408 - FAX: (559)237-4409
E-MAIL: pauliengineering@sbcglobal.net
www.pauliengineering.com

Drawing Title: DETAILS

Approved Project Director:

Project Title: DEMO BUILDINGS 10, 13 AND 14

Location: 2615 E. Clinton Ave, Fresno, CA

Date: 12/12/2012 | Checked: | Drawn:

Project Number: 570-12-571

Building Number: OUTBUILDINGS

Drawing Number: CS501

Dwg. of --

Office of Construction and Facilities Management

Department of Veterans Affairs

VA FORM 08–6231